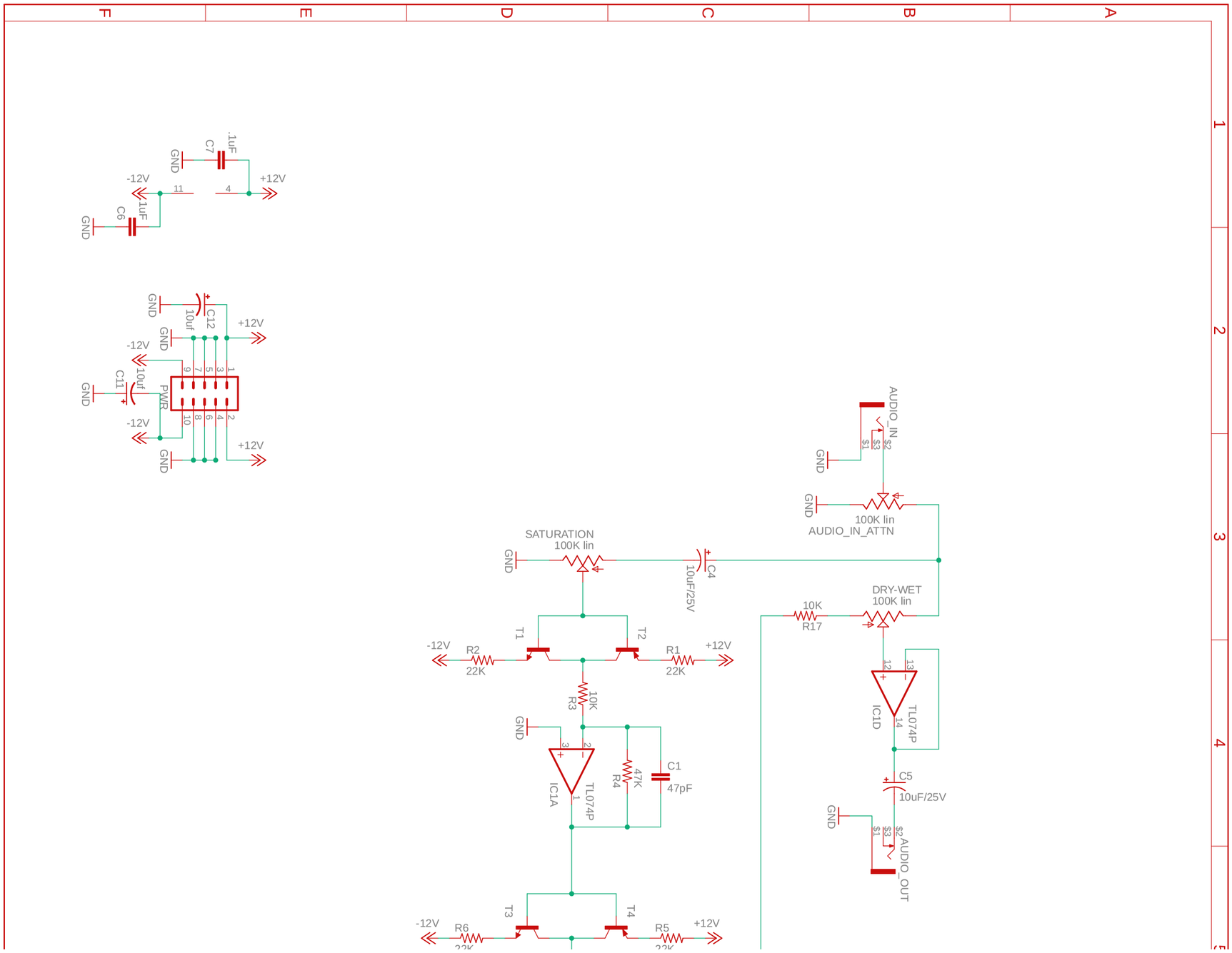
AUDIO_IN
$1
$2
$3
GND
100K lin
AUDIO_IN_ATTN
SATURATION
100K lin
C4
10uF/25V
DRY-WET
100K lin
10K
R17
T1
T2
-12V
R2
22K
R1
22K
+12V
10K
R3
IC1A
TL074P
47K
R4
C1
47pF
IC1D
C5
10uF/25V
AUDIO_OUT
T3
T4
R6
R5
C7
.1uF
C6
1uF
11
4
C12
10uf
C11
PWR

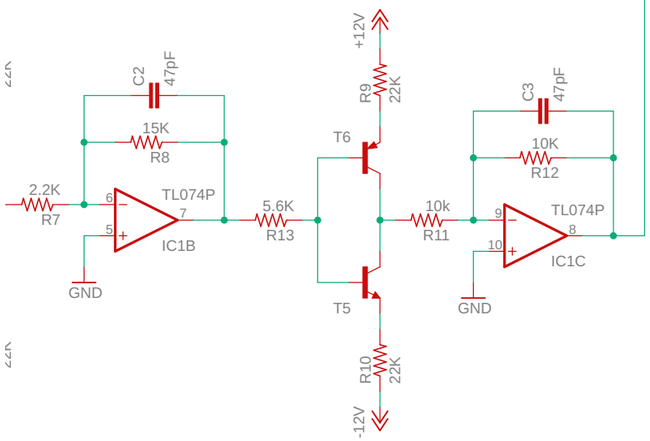

TITLE: ioboard	
Document Number:	REV:
Date: 16-01-2021 18:35	Sheet: 1/1