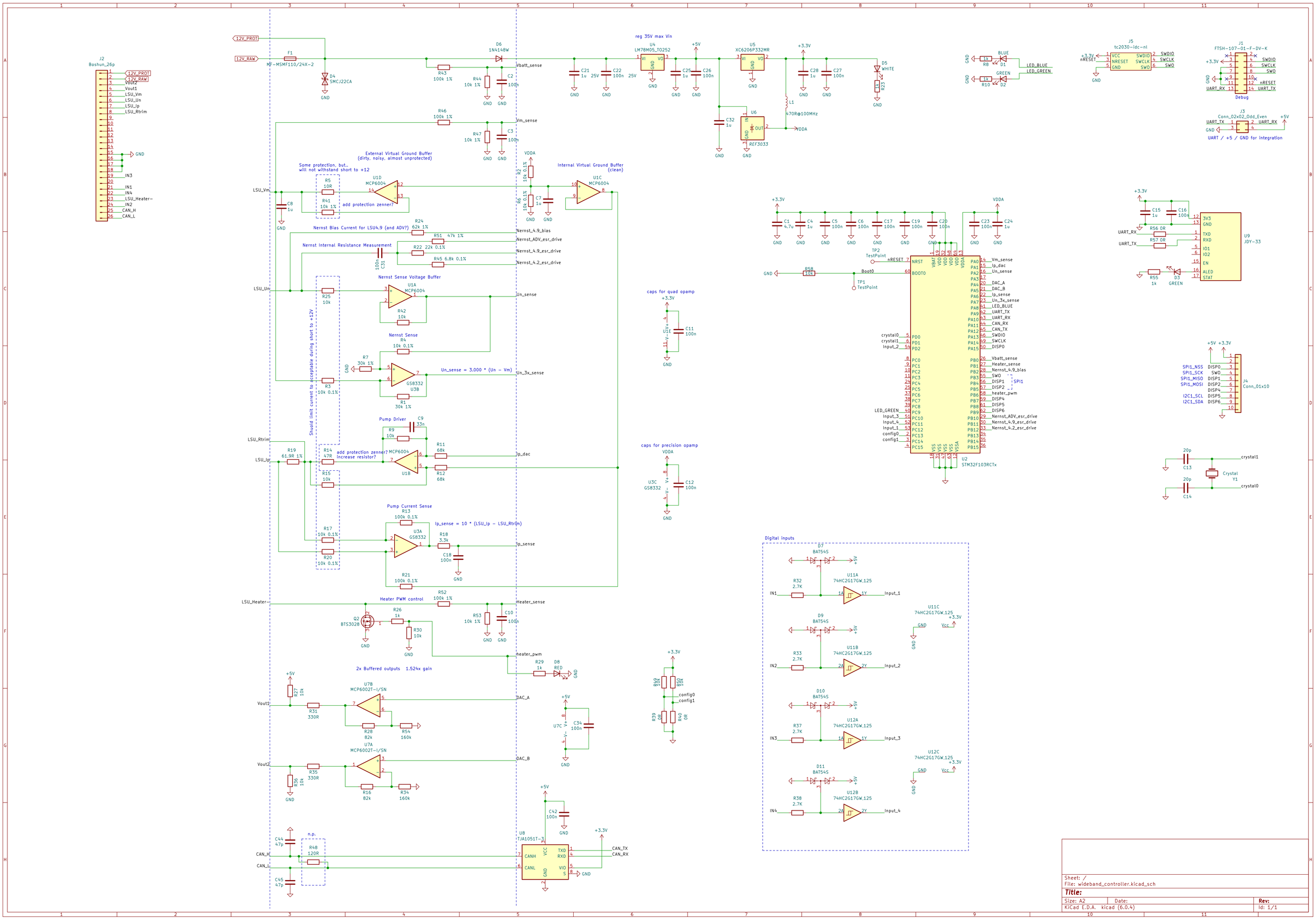
J2
Boshun_26p
12V_PROT
12V_RAW
Vout1
LSU_Vm
LSU_Un
LSU_Rtrim
LSU_Ip
LSU_Heater
IN3
IN1
IN4
LSU_Heater-
IN2
CAN_H
CAN_L
GND
F1
MF-MSMF110/24X-2
D4
SMCJ22CA
D6
1N4148W
R43
100k 1%
R44
10k 1%
C2
100n
Vbatt_sense
R46
100k 1%
R47
10k 1%
C3
100n
Vm_sense
reg 35V max Vin
U4
LM78M05_TO252
C21
1u 25V
C22
100n 25V
+5V
C25
1u
C26
100n
U5
XC6206P332MR
+3.3V
C28
1u
C27
100n
D5
WHITE
R23
1k
L1
470R@100MHz
VDDA
C32
1u
U6
REF3033
External Virtual Ground Buffer
(dirty, noisy, almost unprotected)
Some protection, but...
will not withstand short to +12
R5
10R
R41
10k 1%
U1D
MCP6004
add protection zenner?
C8
1u
R42
10k 1%
R6
10k 1%
C7
1u
Internal Virtual Ground Buffer
(clean)
U1C
MCP6004
Nernst Bias Current for LSU4.9 (and ADV?)
R24
62k 1%
R51
47k 1%
R22
22k 0.1%
R45
6.8k 0.1%
Nernst_4.9_bias
Nernst_ADV_esr_drive
Nernst_4.9_esr_drive
Nernst_4.2_esr_drive
Nernst Internal Resistance Measurement
100n
C31
Nernst Sense Voltage Buffer
U1A
MCP6004
R25
10k
R42
10k
Un_sense
Nernst Sense
R4
10k 0.1%
R7
30k 1%
GS8332
U3B
Un_sense = 3.000 * (Un - Vm)
Un_3x_sense
R3
10k 0.1%
R1
30k 1%
Should limit current to acceptable during short to +12V
Pump Driver
C9
33n
R9
10k
R11
68k
R19
61.9R 1%
R14
47R
add protection zenner?
Increase resistor?
MCP6004
U1B
R12
68k
Ip_dac
R15
10k
Pump Current Sense
R13
100k 0.1%
Ip_sense = 10 * (LSU_Ip - LSU_Rtrim)
R17
10k 0.1%
U3A
GS8332
R18
3.3k
Ip_sense
C18
100n
R20
10k 0.1%
R21
100k 0.1%
Heater PWM control
R52
100k 1%
Heater_sense
Q2
BTS3028
R26
1k
R30
10k
R53
10k 1%
C10
100n
heater_pwm
R29
1k
D8
RED
2x Buffered outputs 1.524x gain
R27
10k
U7B
MCP6002T-I/SN
DAC_A
R31
330R
R28
82k
R54
160k
U7C
C34
100n
U7A
MCP6002T-I/SN
DAC_B
R36
10k
R35
330R
R16
82k
R34
160k
C44
47p
n.p.
R48
120R
C45
47p
U8
TJA1051T-3
C42
100n
CANH
CANL
VCC
GND
TXD
RXD
VIO
S
CAN_TX
CAN_RX
caps for quad opamp
U3D
GS8332
C11
100n
caps for precision opamp
U3C
GS8332
C12
100n
R39
0R
R40
0R
R49
10k
R50
10k
config0
config1
J5
tc2030-idc-nl
VCC
NRESET
GND
SWDIO
SWCLK
SWO
BLUE
GREEN
R8
1k
D1
R10
1k
D2
LED_BLUE
LED_GREEN
J1
FTSH-107-01-F-DV-K
Debug
UART_RX
UART_TX
J3
Conn_02x02_Odd_Even
UART / +5 / GND for integration
C1
4.7u
C4
1u
C5
100n
C6
100n
C17
100n
C19
100n
C20
100n
C23
100n
C24
1u
TP2
TestPoint
nRESET
R58
10k
Boot0
TP1
TestPoint
NRST
BOOT0
PD0
PD1
PD2
PC0
PC1
PC2
PC3
PC4
PC5
PC6
PC7
PC8
PC9
PC10
PC11
PC12
PC13
PC14
PC15
crystal0
crystal1
Input_2
LED_GREEN
Input_3
Input_4
Input_1
config0
config1
VBAT
VDD
VSS
VDDA
VSSA
PA0
PA1
PA2
PA3
PA4
PA5
PA6
PA7
PA8
PA9
PA10
PA11
PA12
PA13
PA14
PA15
PB0
PB1
PB2
PB3
PB4
PB5
PB6
PB7
PB8
PB9
PB10
PB11
PB12
PB13
PB14
PB15
Vm_sense
Ip_dac
Un_sense
DAC_A
DAC_B
Ip_sense
Un_3x_sense
LED_BLUE
UART_TX
UART_RX
CAN_RX
CAN_TX
SWDIO
SWCLK
DISP0
Vbatt_sense
Heater_sense
Nernst_4.9_bias
SWO
DISP1
DISP2
heater_pwm
DISP4
DISP5
DISP6
Nernst_ADV_esr_drive
Nernst_4.9_esr_drive
Nernst_4.2_esr_drive
SPI1
U2
STM32F103RCTx
C15
1u
C16
100n
R56 0R
R57 0R
R55
1k
D3
GREEN
U9
JDY-33
3V3
GND
TXD
RXD
IO1
IO2
EN
ALED
STAT
SPI1_NSS
SPI1_SCK
SPI1_MISO
SPI1_MOSI
I2C1_SCL
I2C1_SDA
J4
Conn_01x10
C13
20p
C14
20p
Crystal
Y1
Digital inputs
D7
BAT54S
R32
2.7K
U11A
74HC2G17GW,125
Input_1
D9
BAT54S
R33
2.7K
U11B
74HC2G17GW,125
Input_2
U11C
74HC2G17GW,125
D10
BAT54S
R37
2.7K
U12A
74HC2G17GW,125
Input_3
U12C
74HC2G17GW,125
D11
BAT54S
R38
2.7K
U12B
74HC2G17GW,125
Input_4
Sheet: /
File: wideband_controller.kicad_sch
Title:
Size: A2
Date:
Rev:
KiCad E.D.A. kicad (6.0.4)
Id: 1/1