12V-SNUB

optional D12-D23 for solenoids only used in rare cases where the topology (IAC, VVT, ALT, ect) requires this fly back diode

176122-6_2ND P99A

176122-6_2ND P99B

176122-6_2ND P99C

1A 12V-SWITCH 1C 1D 1E HL1 HL3 HL2 HL5 1J 1K HL6 HL4 1M 1N HL8 HL7 1P 1Q 1R 1S 1T 1U 1V

2A CRK2+ 2B CRK2- 2C CAM+ 2D CAM- 2E 2F KNOCK-INPUT-1 2G KNOCK-INPUT-0 2H 2J 12V-SNUB 2K CANH 2L CANL 2M LOW-1A-04 2N LOW-1A-03 2P LOW-1A-02 LOW-1A-01_2

3A GND 3B OUTPUT-GND 3D CPU-GND 3E INPUT-GND 3F AN11-HARN 3G AN12-HARN 3H AN9-HARN 3J AN10-HARN 3K AN7-HARN 3L AN8-HARN 3M 5V 3N AN6-HARN 3P AN5-HARN 3R AN4-HARN AN3-HARN AN2-HARN AN1-HARN 3S 3T LOW-1A-05 3U LOW-1A-06 3V LOW-1A-07 3W LOW-1A-08 3X LOW-1A-09 3Y LOW-1A-10 3Z LOW-1A-11 LOW-1A-12

rusEfi

12V-SWITCH GND — Sheet: PWR_buck_12V_switcher — Vin GND 5V-REG — W23 — 5V

pg 9

File: PWR_buck_12V_switcher.sch

Sheet: stm32f407_board

pg 10

VDD GND PC2 PC1 PA0 PC3 PA2 PA1 PA4 PA3 PA7 PA6 PC5 PC4 PB0 PB13 PB14 PB15 PB11 PC0 PD4 PB3 PB4 PB5 PC10 PC11 NC-PC15 NC-PC14 NC-PH1 NC-PH0 NC-PA9 NC-PA10 PB2-NC PA15 PB1 PC12 PD1 PD6 PD12 PD13 PD14 PD15 PA14 BOOT0 NC NRST PA8 PA13

5V 3.3V PE6 PE5 PD7 PC13 PE3 PE4 PD3 PE2 PB9 PD5 PB8 PB7 PC9 PC7 PE14 PE12 PE10 PE8 PD9 PD8 PA5 PC6 PB12 PB6 PE7 PE9 PE11 PE13 PE15 PB10 PC8 PD0 PD10 PD2 PD11 PE1 PE0

Sheet: adc_amp_divider

5V GND AN1-HARN AN2-HARN AN3-HARN AN4-HARN AN5-HARN AN6-HARN AN7-HARN AN8-HARN AN9-HARN AN10-HARN AN11-HARN AN12-HARN 12V-SWITCH — INP1 INP2 INP3 INP4 INP5 INP6 INP7 INP8 INP9 INP10 INP11 INP12 12V_bat — GND OUT1 OUT2 OUT3 OUT4 OUT5 OUT6 OUT7 OUT8 OUT9 OUT10 OUT11 OUT12 — P15 P24 P25 P26 P59 P60 P61 P62 P64 P66

pg 3

File: adc_amp_divider.sch

Sheet: inj_12ch

INJ-01_5V INJ-02_5V INJ-03_5V INJ-04_5V INJ-05_5V INJ-06_5V INJ-07_5V INJ-08_5V INJ-09_5V INJ-10_5V INJ-11_5V INJ-12_5V 5V — INJ-01_2 INJ-02 INJ-03 INJ-04 INJ-05 INJ-06 INJ-07 INJ-08 INJ-09 INJ-10 INJ-11 INJ-12 iGND1 iGND2 — LOW-1A-01_2 LOW-1A-02 LOW-1A-03 LOW-1A-04 LOW-1A-05 LOW-1A-06 LOW-1A-07 LOW-1A-08 LOW-1A-09 LOW-1A-10 LOW-1A-11 LOW-1A-12 GND GND

P63 P65 P23 P20 P21

pg 6

File: inj_12ch.sch

Sheet: DD_HIP9011

5V GND KNOCK-INPUT-1 KNOCK-INPUT-0 — 5V GND KNOCK1 KNOCK0 OUT — CS SCK SO SI INT/HLD — SCK-2 SO-2 SI-2

P12

pg 5

File: DD_HIP9011.sch

Sheet: hi-lo

PC9 PC7 PE14 PE12 PE10 PE8 PD9 PD8 — P69 P67 P68 P70 P72 P71 P74 P73 — DOHL1 DOHL2 DOHL3 DOHL4 DOHL5 DOHL6 DOHL7 DOHL8 — HL1 HL2 HL3 HL4 HL5 HL6 HL7 HL8 GND 12V — 5V 12V-SWITCH

pg 2

File: hi-lo.sch

Sheet: mmc_usb_1

5V 3.3V GND — 5V 3.3V GND — CS_SD_MODULE SPI_SCK SPI_MISO SPI_MOSI — CS_SD SCK SO SI

pg 7

File: mmc_usb_1.sch

Sheet: cps_vrs_io_1

PA5 PC6 — JP34 JP35 — CRANK 5V GND CAM — CRANK CAM — CRK2- CRK2+ CAM- CAM+

pg 8

File: cps_vrs_io_1.sch

Sheet: can_brd_1

3.3V GND PB12 PB6 — 3.3V GND CAN_RX CAN_TX — 5V CANH CANL

pg 4

File: can_brd_1.sch

U4 ITEAD_HC-0X

VCC RESET AIO0 AIO1 UART_RTS UART_CTS UART_RX UART_TX PIO0 PIO1 PIO2 PIO3 PIO4 PIO5 PIO6 PIO7 PIO8 PIO9 PIO10 PIO11 SPI_MOSI SPI_CS SPI_CLK SPI_MISO USB_D- USB_D+ PCM_CLK PCM_OUT PCM_IN PCM_SYNC GND GND GND GND

3.3V — C23 1uF — C24 0.1uF — GND

PD6 reset defaults

Sheet: thermocouple1

3.3V GND — 3.3v GND — SCK MISO /CS — SCK SO — P22

pg 11

File: thermocouple_module.sch

Sheet: thermocouple2

3.3V GND — 3.3v GND — SCK MISO /CS — SCK SO — P10

pg 12

File: thermocouple_module.sch

Sheet: thermocouple3

3.3V GND — 3.3v GND — SCK MISO /CS — SCK SO — P6

pg 13

File: thermocouple_module.sch

Sheet: thermocouple4

3.3V GND — 3.3v GND — SCK MISO /CS — SCK SO — P9

pg 14

File: thermocouple_module.sch

File: stm32f407_board.sch

GND — 1k R99 — 1kpot RV101 — HD44780_VLCD

The JP1 jumper is needed because we cannot feed the screen via USB - we would need to disconnect it while the board is on a bench

5V — JP61 — PWR_FLAG — GND HD44780_VCC HD44780_VLCD HD44780_RS GND HD44780_CS D0 D1 D2 D3 HD44780_D4 HD44780_D5 HD44780_D6 HD44780_D7 — 1 2 3 4 5 6 7 8 9 10 11 12 13 14

S1 — GND VCC VLCD RS R/W CS D0 D1 D2 D3 D4 D5 D6 D7 — A K — HD44780_VCC GND

DISPLAY_BL

P75 P17 P76 P19 P77 — SW1 SW2 SW3 SW4 SW5

U5 — A Center C B Com D — 1 2 3 6 5 4 — GND

SKRHAAE010

PWR_FLAG

Sheet: Misc_Vias

12V-SWITCH 5V 3.3V GND CRANK CAM — 12V-SWITCH 5V 3.3V GND CRANK CAM

File: Misc_Vias.sch

rusEFI.com		
Sheet: /		
File: frankenso.sch		
Title: frankenso		
Size: B	Date: 2017-05-07	Rev: 0.5
KiCad E.D.A. kicad 4.0.5		Id: 1/15

8 channel high / low side driver

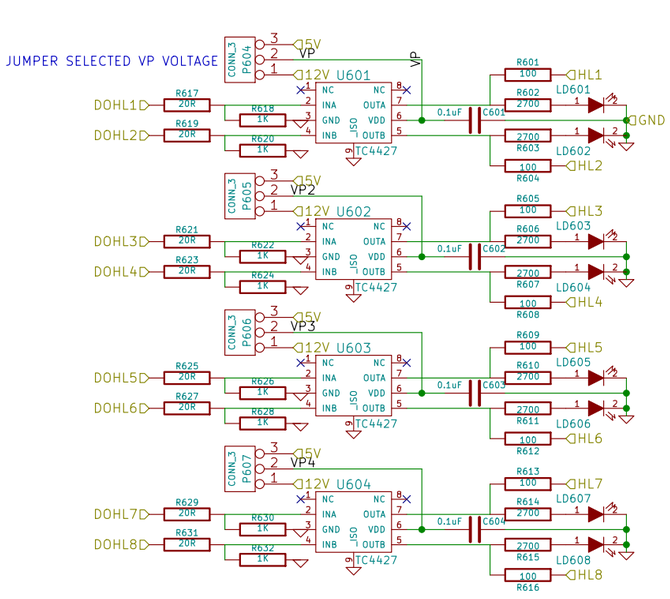

rusEFI.com		
Sheet: /hi-lo/ File: hi-lo.sch		
Title: frankenso		
Size: B	Date: 2017-04-22	**Rev: 0.5**
KiCad E.D.A. kicad 4.0.5		Id: 2/15

INP12
INP11
INP10
INP9
INP8
INP7
INP6
INP5
INP4
INP3
INP2
INP1

OUT4
OUT3
OUT1
OUT2
OUT10
OUT12
OUT6
OUT5
OUT8
OUT7
OUT11
OUT9

SUGGESTED / DEFAULT ENGINE WIRING IN BLUE

O2 INP4 R240 39pF R241 500K R242 10k D240 DOUBLE_SCHOTTKY R243 100 C240 1uF U201A MCP6004 R244 1500 .1% R245 1500 .1% OUT4
low pass filter knee at 1kHz

MAP MAF INP3 R230 39pF R231 500K R232 10k D230 DOUBLE_SCHOTTKY R233 100 C230 0.01uF U201B MCP6004 R234 1500 .1% R235 1500 .1% OUT3

IAT 1K – 10K INP2 R220 2700 R221 20K R222 10k D220 DOUBLE_SCHOTTKY R223 100 C220 1uF U201C MCP6004 R224 1500 .1% R225 1500 .1% OUT2
low pass filter knee at 1kHz

CLT 1K – 10K INP1 R210 2700 R211 20K R212 10k D210 DOUBLE_SCHOTTKY R213 100 C210 1uF C211 0.1uF U201D MCP6004 R214 1500 .1% R215 1500 .1% OUT1
low pass filter knee at 1kHz

INP8 R280 10K R281 20K R282 10k D280 DOUBLE_SCHOTTKY R283 100 C280 0.01uF U202A MCP6004 R284 1500 .1% R285 1500 .1% OUT8

INP7 R270 39pF R271 500K R272 10k D270 DOUBLE_SCHOTTKY R273 100 C270 0.01uF U202B MCP6004 R274 1500 .1% R275 1500 .1% OUT7

INP6 R260 10K R261 20K R262 10k D260 DOUBLE_SCHOTTKY R263 100 C260 0.01uF U202C MCP6004 R264 1500 .1% R265 1500 .1% OUT6

TPS 1K – 10K INP5 R250 39pF R251 500K R252 10k D250 DOUBLE_SCHOTTKY R253 100 C250 0.01uF C251 0.1uF U202D MCP6004 R254 1500 .1% R255 1500 .1% OUT5

VBAT 12V_bat 12.02 50.2k R320 39K 0.1% INP12 8.93k R321 10K 0.1% R322 10k D320 DOUBLE_SCHOTTKY R323 100 C320 0.1uF U203A MCP6004 R324 1500 .1% R325 1500 .1% OUT12
2.445 2.160 2.443 2.160 2.443 2.160 2.426 2.160 1.246 1.0798
low pass filter knee at 10kHz

ALT CAM INP11 R310 1k R311 20K R312 10k D310 DOUBLE_SCHOTTKY R313 100 C310 0.01uF U203B MCP6004 R314 1500 .1% R315 1500 .1% JP11 OUT11
low pass filter knee at 100kHz typical

INP10 R300 10k R301 20K R302 10k D300 DOUBLE_SCHOTTKY R303 100 C300 0.01uF U203C MCP6004 R304 1500 .1% R305 1500 .1% OUT10

ALT CRANK INP9 R290 1k R291 20K R292 10k D290 DOUBLE_SCHOTTKY R293 100 C290 0.01uF C291 0.1uF PWR_FLAG U203D MCP6004 R294 1500 .1% R295 1500 .1% JP9 OUT9

rusEFI.com		
Sheet: /adc_amp_divider/		
File: adc_amp_divider.sch		
Title: frankenso		
Size: B	Date: 2017-04-22	**Rev: 0.5**
KiCad E.D.A. kicad 4.0.5		Id: 3/15

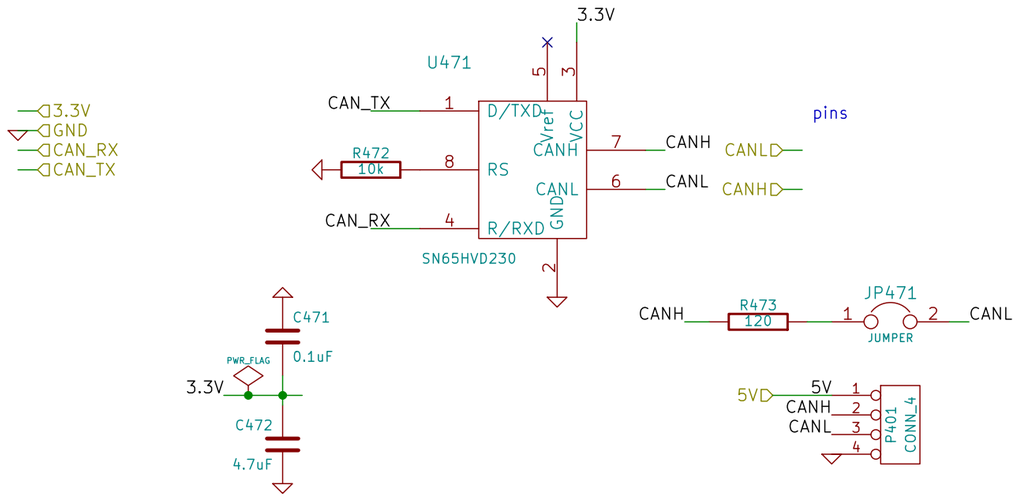

CAN level shifter

rusEFI.com		
Sheet: /can_brd_1/ File: can_brd_1.sch		
Title: frankenso		
Size: A	Date: 2017-04-22	**Rev: 0.5**
KiCad E.D.A. kicad 4.0.5		Id: 4/15

DD_HIP9011 ver.2
RusEfi.com

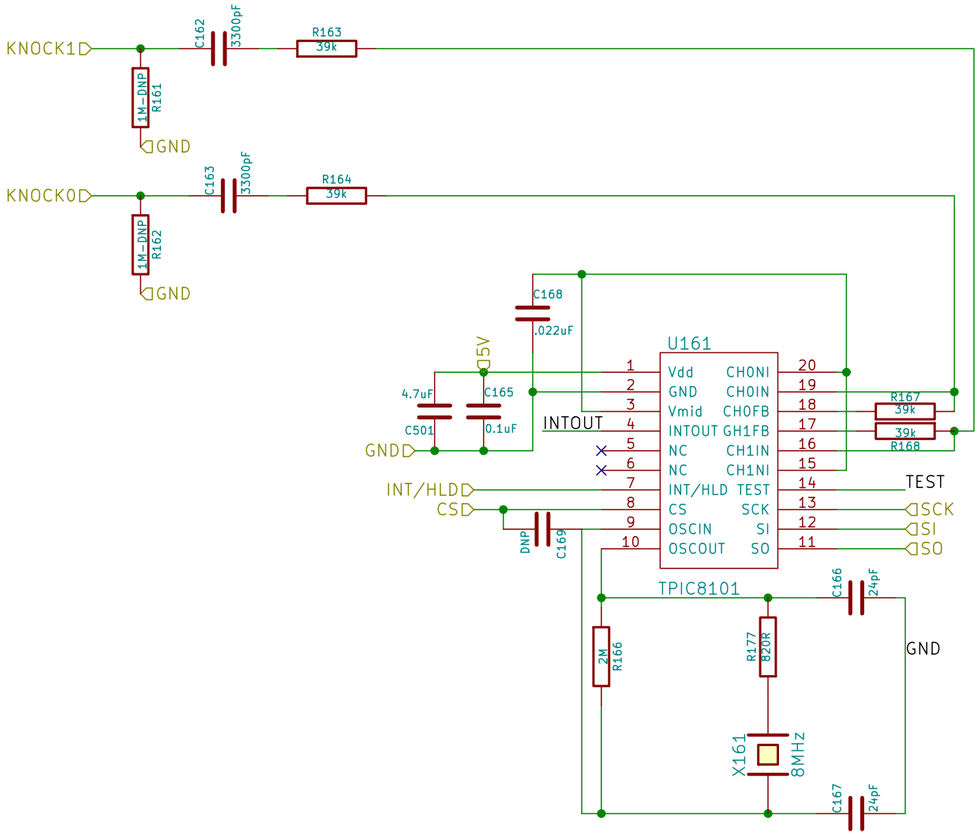

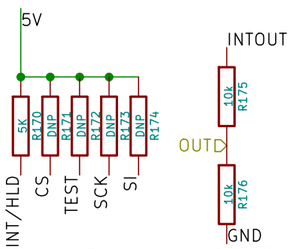

NOTE:
SPI uses internal 5V pull ups, with MCU SPI being float to pull down.
This allows 3.3V / 5V tolerante MCU's to use these SPI coms.

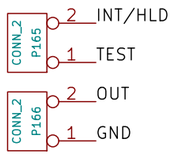

http://www.crystek.com/documents/appnotes/Pierce-GateIntroduction.pdf
PCB per predictions with SaturnPCB has less then 3.5pF traces,
TPIC pins assumed 5pF
ESR = 80ohms max
Rf = 2meg could be between 1meg and 10meg.
Cload should be 18pF per XTAL datasheet
Cload = ([Cin+C1][C2+Cout])/(Cin+C1+C2_Cout)+PCBstray
Cload = ([5+24][24+5])/(5+24+24+5)+3.5= 18.0pF
C1=C2=C166=C167 = 24pF
Rs = 1/(2piFC2) = 1/(2*pi*8MHz*24pF) = 829ohms, 820ohms is close enough = R177

rusEFI.com		
Sheet: /DD_HIP9011/		
File: DD_HIP9011.sch		
Title: frankenso		
Size: A	Date: 2017-04-22	**Rev: 0.5**
KiCad E.D.A. kicad 4.0.5		Id: 5/15

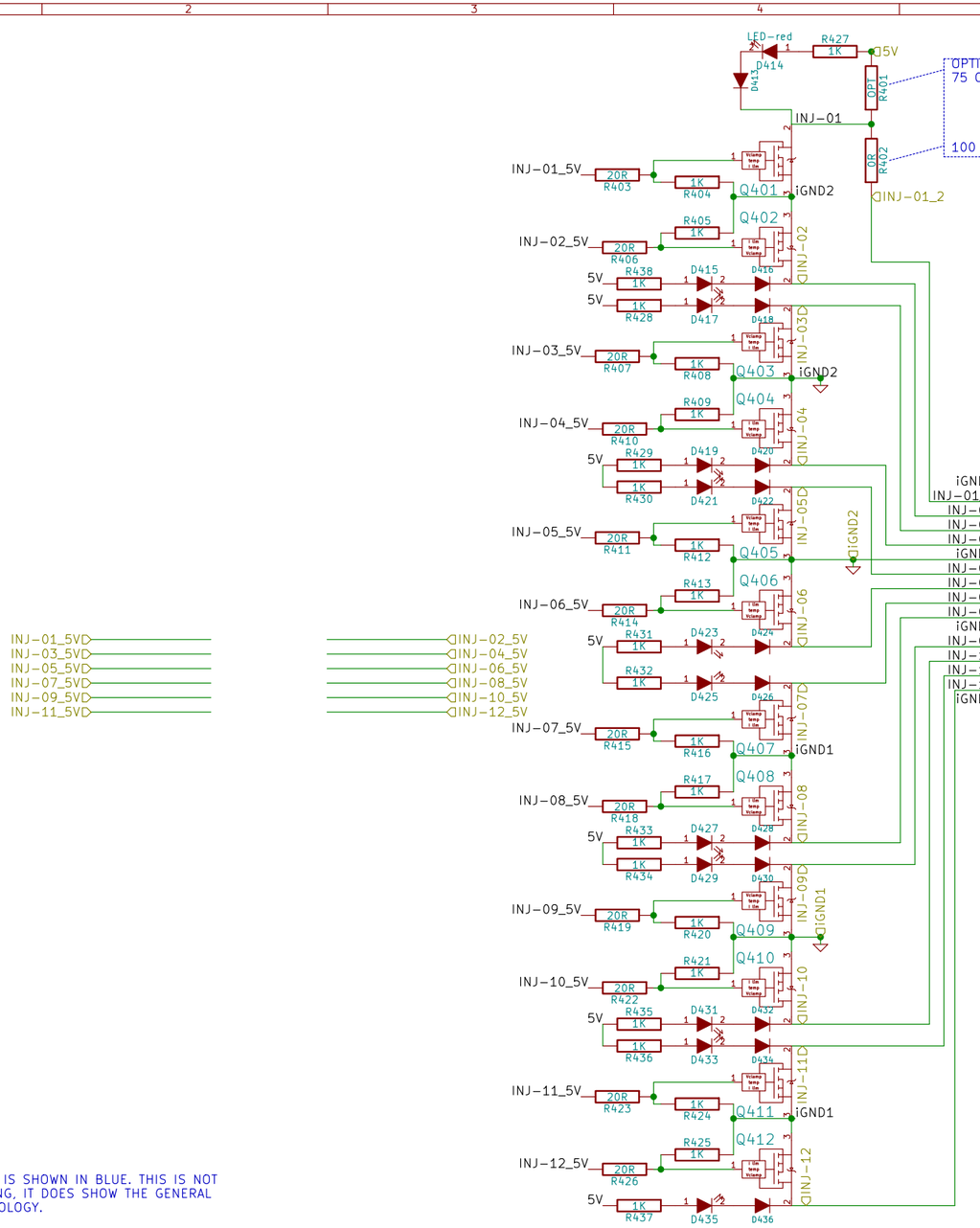

12 channel injector driver
also suitable for fuel pump relay, IAC solenoid etc

MISC NOTES

THE GENERAL SYSTEM LAYOUT IS SHOWN IN BLUE. THIS IS NOT THE SUGGESTED SYSTEM WIRING, IT DOES SHOW THE GENERAL OVERALL CIRCUIT LAYOUT TOPOLOGY.

THE PCB WIRING IS SHOWN IN RED, GREEN WITH A BLUE BUS.

Screw terminals 1760500000

Screw connector PCB http://octopart.com/39522-1007-molex-655409
Screw connector harness http://octopart.com/partsearch#search/requestData&q=39520-0007

rusEFI.com		
Sheet: /inj_12ch/		
File: inj_12ch.sch		
Title: frankenso		
Size: B	Date: 2017-04-22	**Rev: 0.5**
KiCad E.D.A. kicad 4.0.5		Id: 6/15

JUMPER WJ01 IS A BACKUP PLAN. THE VOLTAGE DROP ACROSS D703 MAY BE NOT TOLERABLE, SO WE HAVE A BACK UP PLAN IF WE NEED TO BYPASS THE DIODE WITH A LOWER VOLTAGE DROP

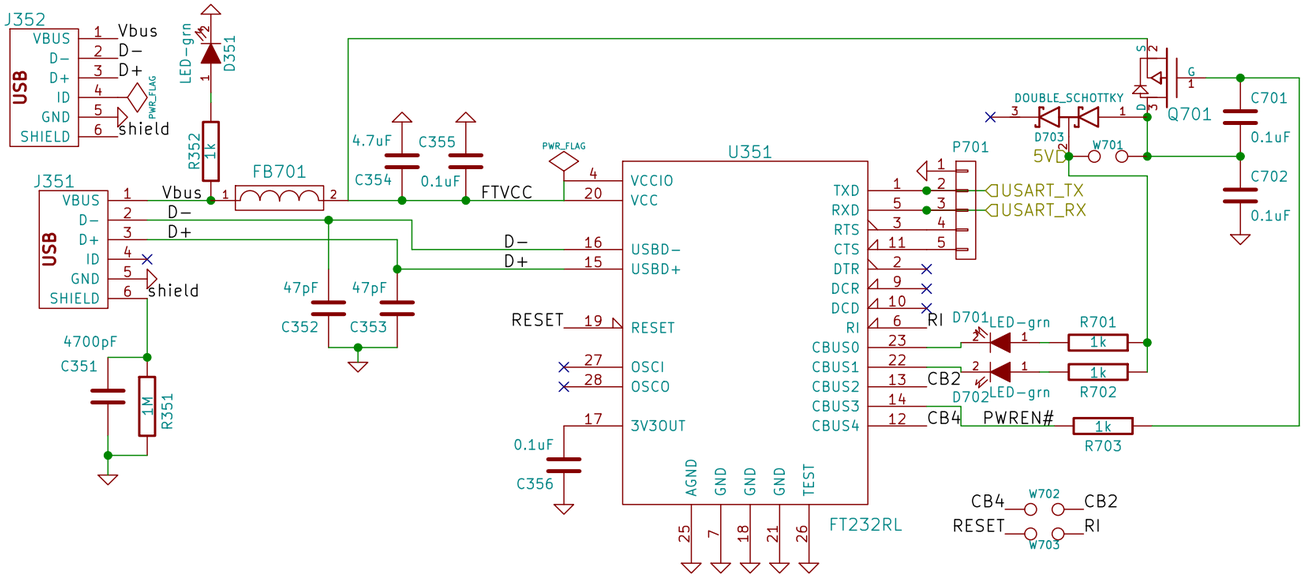

For right conn

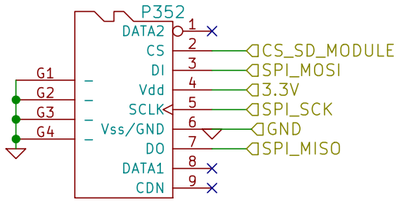

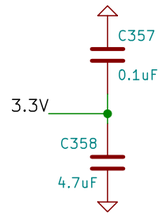

SD card slot
USB TTL module

rusEFI.com		
Sheet: /mmc_usb_1/ File: mmc_usb_1.sch		
Title: frankenso		
Size: A	Date: 2017-04-22	**Rev: 0.5**
KiCad E.D.A. kicad 4.0.5		Id: 7/15

When configured for VR, do not populate W1002 or W1003.
These jumpers allow isolation which prevents the VR signal
from getting into the 5V or GND.

Many Hall sensors are set as a open collector sinking topology.
Those setups require a pull up resistor, and 1k ohm is a common size.
These pull up resistors are noted as R137 and R141 on this page.
You need to match these pull up resistors with your hall sensors requirements.
Often you need about 5mA of drive. See snippet from Cherry hall sensors to the right.
Some sensors are the inverse, and need a pull down resistor. These are less common.
These pull down resistors are noted as R801 and R802 on this page and are
not typically installed.

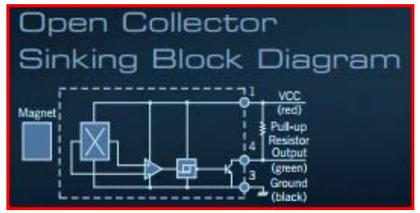

Recommended pull-up resistor values are as follows:

Volts dc	5	9	12	15	24
Ohms	1k	1.8k	2.4k	3k	3k

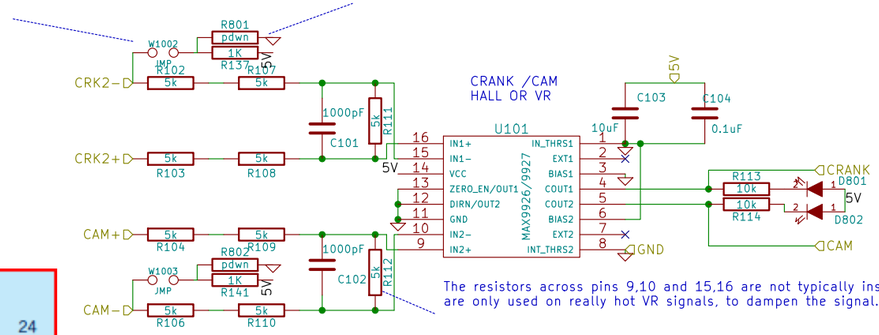

The resistors across pins 9,10 and 15,16 are not typically installed, they
are only used on really hot VR signals, to dampen the signal.

rusEFI.com		
Sheet: /cps_vrs_io_1/ File: cps_vrs_io_1.sch		
Title: frankenso		
Size: B	Date: 2017−04−22	**Rev: 0.5**
KiCad E.D.A. kicad 4.0.5		Id: 8/15

Brief overview
-- Q1002, R1003, D1002 preform an active transient protection. It will suppress voltages up to 200V down to 19V.
-- Q1001, R1001, D1001 preform a reverse polarity protection. If the input signal is the wrong polarity, the gate will not conduct which will prevent current from flowing.
-- D1003 is a second transient suppressor, it would catch faster transients allowing a brief amount of time for Q1002 to preform it's duty.
-- L1003 is a choke, it simple prevents switching noise from going up the power wire where it can get into other circuits.
-- C1001 is a bulk cap, it simply stores energy locally such that the regulator can draw large currents in short periods of time.
-- U1001 and the components to the right, are a buck style switching regulator, that will pull the 5V line up to 5V. It will not pull it down from 5V if there is an external voltage.
The U1001 circuit has been designed for 3A output and up to 20V input, but typically 14.4V or 12.4V input. L1001 wants to be about 68uH to 100uH with less than 0.3 ohms resistance.

200V surge, 18V to 7V typical.
Suggested mininium 16awg
Upstream 1A fuse littel fuse 0287001

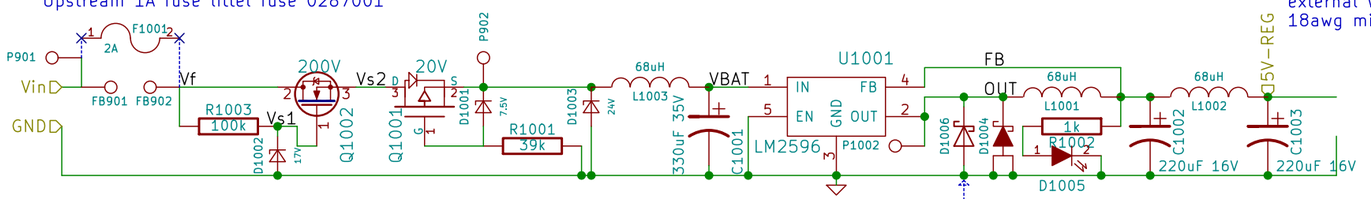

5V 5mVp-p 3A
Suggested
external wires
18awg min

ALTERNATIVE DIODE FOR D1004
LIMITS OUTPUT TO 2.3A

Alternate options
Q1002 Microchip,DN2625K4-G with FAIRCHILD,1N5247B
D1002 IXYS,IXTA6N50D2 with FAIRCHILD,1N5244B
D1004 VISHAY,VS-50WQ04FN-M3 with VISHAY,VS-50WQ04FNPBF

rusEFI.com		
Sheet: /PWR_buck_12V_switcher/		
File: PWR_buck_12V_switcher.sch		
Title: frankenso		
Size: A	Date: 2017-04-22	**Rev: 0.5**
KiCad E.D.A. kicad 4.0.5		Id: 9/15

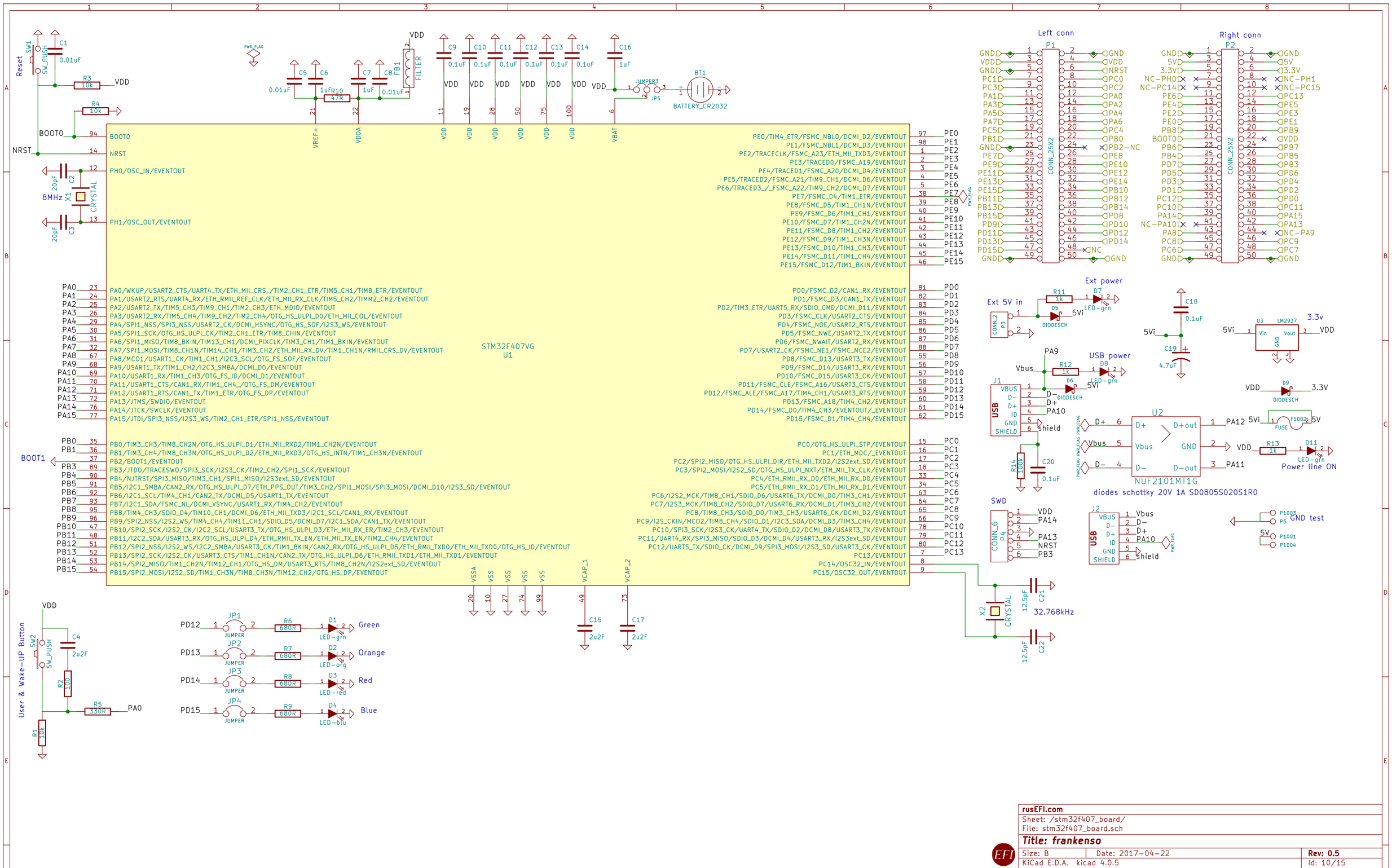

rusEFI.com
Sheet: /stm32f407_board/
File: stm32f407_board.sch
Title: frankenso
Size: B | Date: 2017-04-22 | Rev: 0.5
KiCad E.D.A. kicad 4.0.5 | Id: 10/15

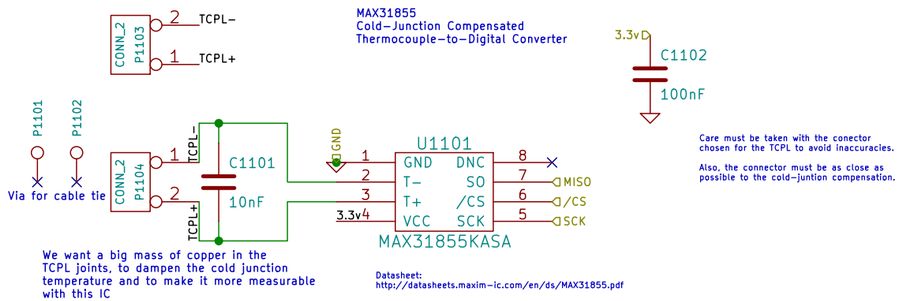

rusEFI.com		
Sheet: /thermocouple1/ File: thermocouple_module.sch		
Title: frankenso		
Size: A	Date: 2017-04-22	**Rev: 0.5**
KiCad E.D.A. kicad 4.0.5		Id: 11/15

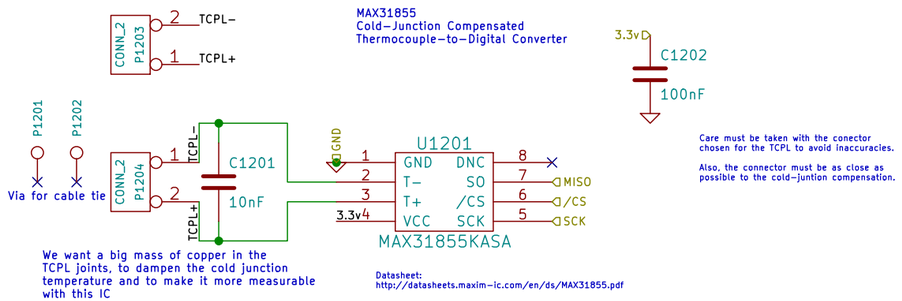

rusEFI.com		
Sheet: /thermocouple2/ File: thermocouple_module.sch		
Title: frankenso		
Size: A	Date: 2017-04-22	**Rev: 0.5**
KiCad E.D.A. kicad 4.0.5		Id: 12/15

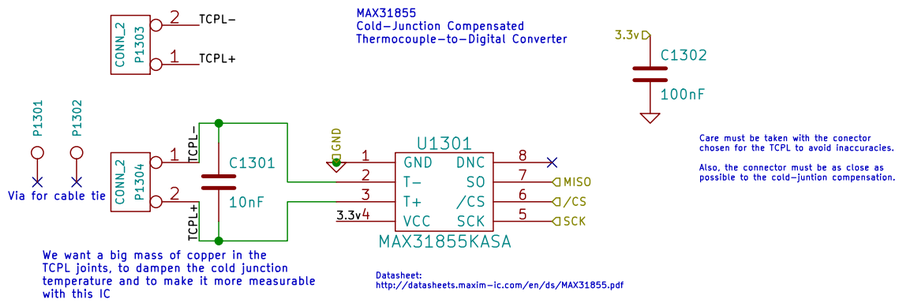

rusEFI.com		
Sheet: /thermocouple3/ File: thermocouple_module.sch		
Title: frankenso		
Size: A	Date: 2017-04-22	**Rev: 0.5**
KiCad E.D.A. kicad 4.0.5		Id: 13/15

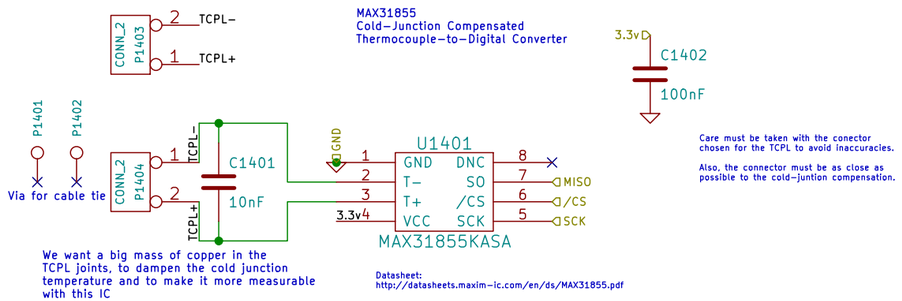

rusEFI.com		
Sheet: /thermocouple4/ File: thermocouple_module.sch		
Title: frankenso		
Size: A	Date: 2017-04-22	**Rev: 0.5**
KiCad E.D.A. kicad 4.0.5		Id: 14/15

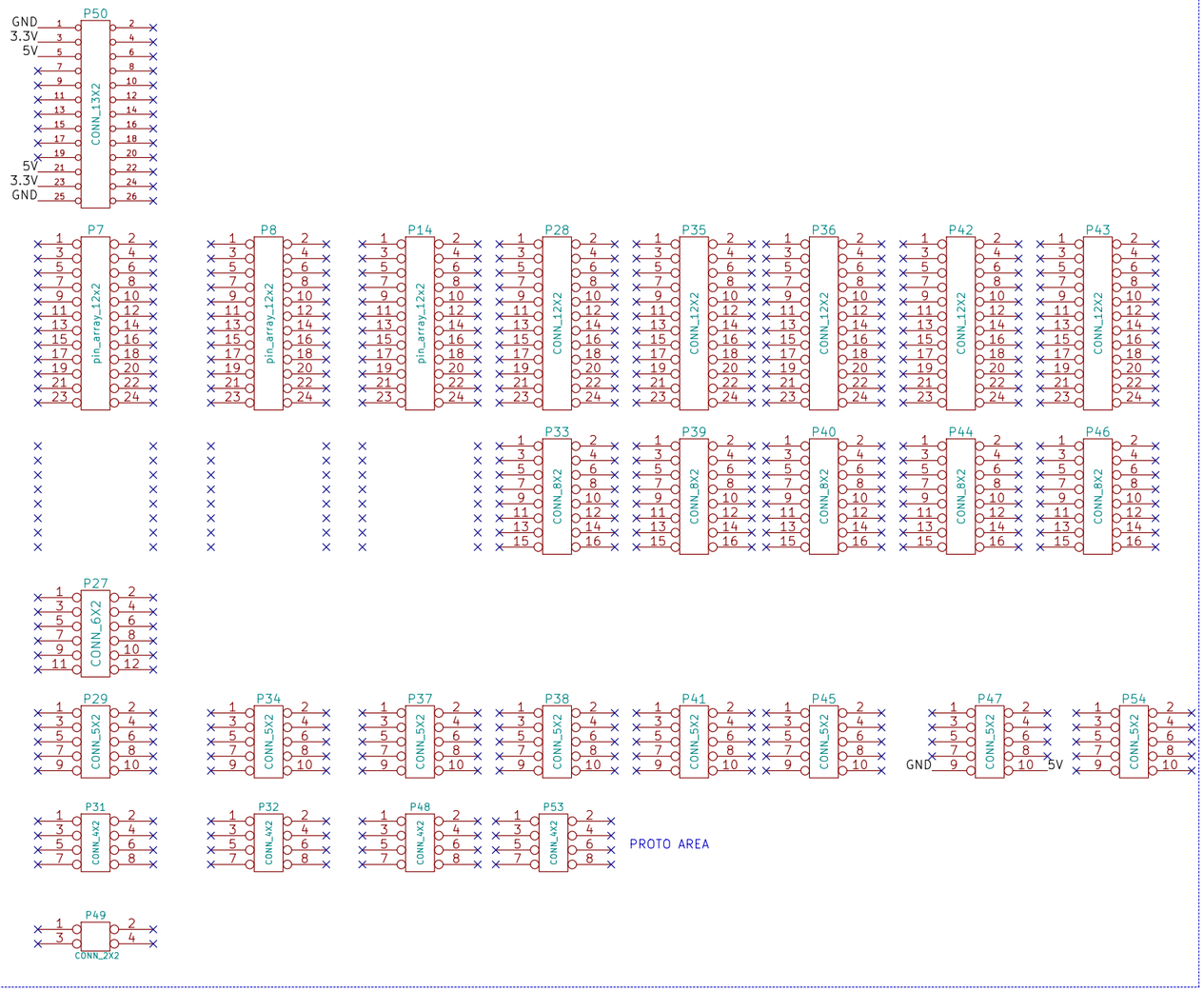

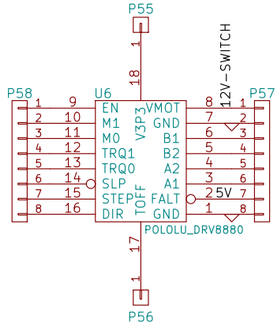

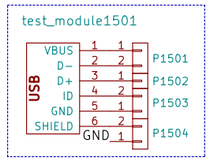

These two jumpers
are here to accomodate
stm32f4discovery

GND — JPO3JPO2 — GND
GND — JPO3JPO2 — GND

12V-SWITCH — JPO7JPO6 — 12V-SNUB
GND — JPO7JPO6 — GND

These four jumpers
are test points

5V — JPO9JPO8 — 5V
3.3V — JPO9JPO8 — 3.3V

That's alternative signal
OUTPUT - these traces
should be routable to PC6
and PA5 via jumpers.
Aleternative to W212 and
W212 routung of op-amps
ch 11 and ch 12

CRANK — TEST2 — CAM

See below links about barriers in GND planes. The current loops in the layout do not appear to need barriers.

http://rusefi.com/wiki/index.php?title=Manual:Hardware:PCB_design_rules
http://www.maximintegrated.com/en/app-notes/index.mvp/id/5450

rusEFI.com		
Sheet: /Misc_Vias/ File: Misc_Vias.sch		
Title: frankenso		
Size: B	Date: 2017-04-22	**Rev: 0.5**
KiCad E.D.A. kicad 4.0.5		Id: 15/15