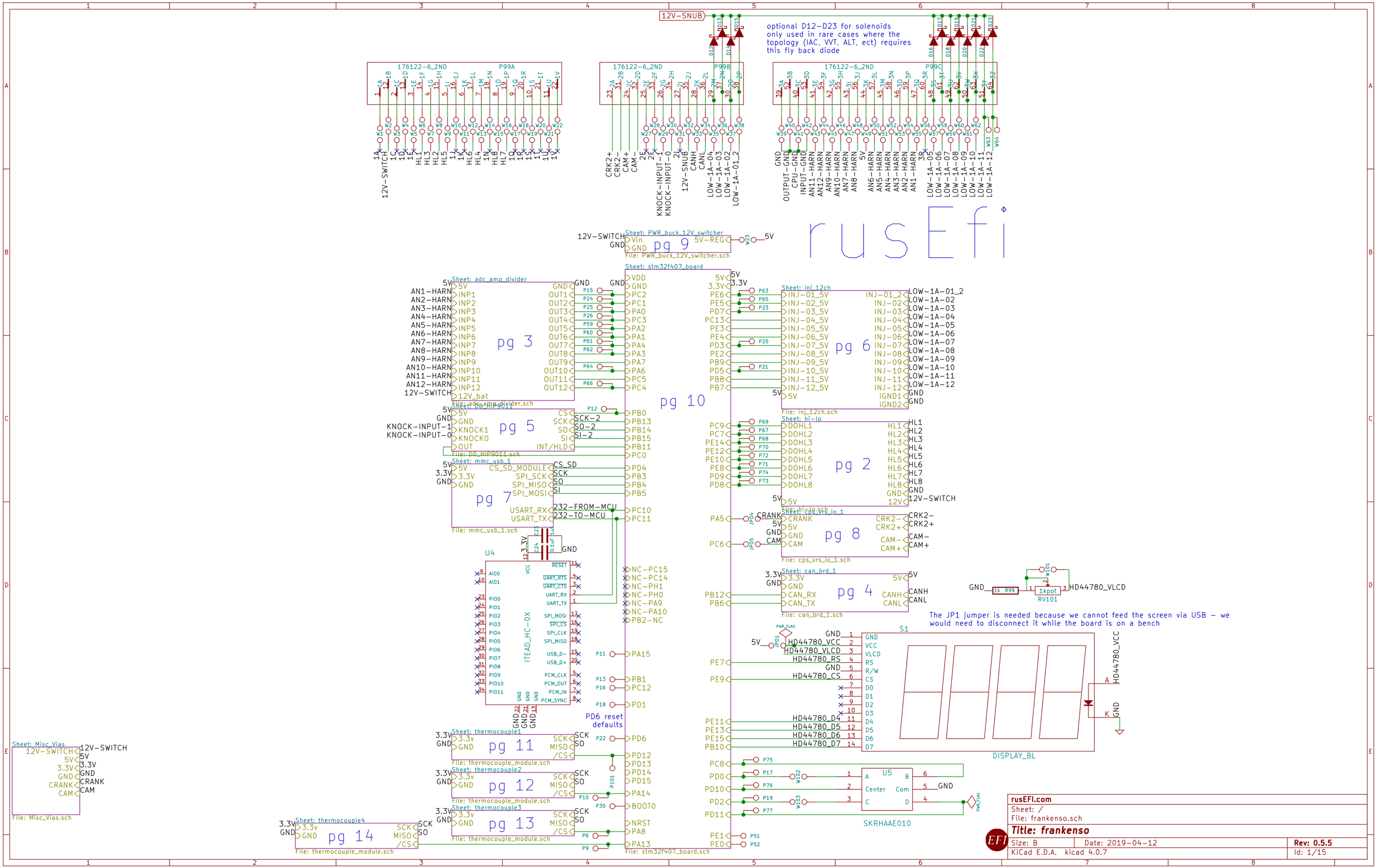

12V-SNUB
optional D12-D23 for solenoids only used in rare cases where the topology (IAC, VVT, ALT, ect) requires this fly back diode
176122-6_2ND
P99A
P99B
P99C
rusEfi
Sheet: PWR_buck_12V_switcher
File: PWR_buck_12V_switcher.sch
pg 9
Sheet: stm32f407_board
pg 10
Sheet: adc_amp_divider
File: adc_amp_divider.sch
pg 3
Sheet: DD_HIP9011
File: DD_HIP9011.sch
pg 5
Sheet: mmc_usb_1
File: mmc_usb_1.sch
pg 7
Sheet: inj_12ch
File: inj_12ch.sch
pg 6
Sheet: hi-lo
File: hi-lo.sch
pg 2
Sheet: cps_vrs_io_1
File: cps_vrs_io_1.sch
pg 8
Sheet: can_brd_1
File: can_brd_1.sch
pg 4
U4
ITEAD_HC-0X
PD6 reset defaults
Sheet: thermocouple1
File: thermocouple_module.sch
pg 11
Sheet: thermocouple2
File: thermocouple_module.sch
pg 12
Sheet: thermocouple3
File: thermocouple_module.sch
pg 13
Sheet: thermocouple4
File: thermocouple_module.sch
pg 14
Sheet: Misc_Vias
File: Misc_Vias.sch
File: stm32f407_board.sch
The JP1 jumper is needed because we cannot feed the screen via USB - we would need to disconnect it while the board is on a bench
S1
DISPLAY_BL
U5
SKRHAAE010
rusEFI.com
Sheet: /
File: frankenso.sch
Title: frankenso
Size: B
Date: 2019-04-12
Rev: 0.5.5
KiCad E.D.A. kicad 4.0.7
Id: 1/15

8 channel high / low side driver

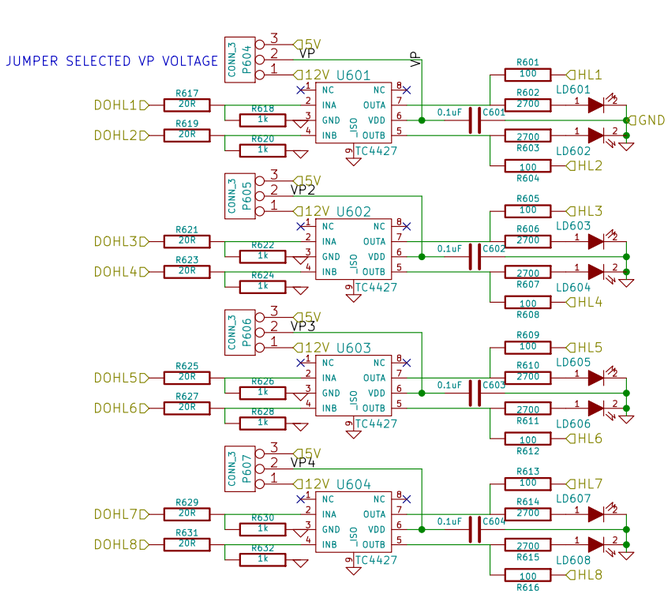

rusEFI.com		
Sheet: /hi-lo/ File: hi-lo.sch		
Title: frankenso		
Size: B	Date: 2019-04-12	**Rev: 0.5.5**
KiCad E.D.A. kicad 4.0.7		Id: 2/15

INP12
INP11
INP10
INP9
INP8
INP7
INP6
INP5
INP4
INP3
INP2
INP1

OUT4
OUT3
OUT1
OUT2
OUT10
OUT12
OUT6
OUT5
OUT8
OUT7
OUT11
OUT9

SUGGESTED / DEFAULT ENGINE WIRING IN BLUE

O2 INP4 — R242 10k; R240 DNP; R241 500K; DOUBLE_SCHOTTKY D240; R243 100; C240 1uF; U201A MCP6004; R244 1500 .1%; R245 1500 .1%; OUT4
low pass filter knee at 1kHz or 10Hz with 10k series resistor

MAP MAF INP3 — R232 10k; R230 DNP; R231 500K; D230; R233 100; C230 0.01uF; U201B MCP6004; R234 1500 .1%; R235 1500 .1%; OUT3

IAT 1K – 10K INP2 — R222 10k; R220 2700; R221 DNP; D220; R223 100; C220 1uF; U201C MCP6004; R224 1500 .1%; R225 1500 .1%; OUT2
low pass filter knee at 1kHz or 10Hz with 10k series resistor

CLT 1K – 10K INP1 — R212 10k; R210 2700; R211 DNP; D210; R213 100; C210 1uF; U201D MCP6004; R214 1500 .1%; R215 1500 .1%; OUT1
low pass filter knee at 1kHz or 10Hz with 10k series resistor

INP8 — R282 10k; R280 10K; R281 DNP; D280; R283 100; C280 0.01uF; U202A MCP6004; R284 1500 .1%; R285 1500 .1%; OUT8

INP7 — R272 10k; R270 10K; R271 500K; D270; R273 100; C270 0.01uF; U202B MCP6004; R274 1500 .1%; R275 1500 .1%; OUT7

INP6 — R262 10k; R260 10K; R261 DNP; D260; R263 100; C260 0.01uF; U202C MCP6004; R264 1500 .1%; R265 1500 .1%; OUT6

TPS 1K – 10K INP5 — R252 10k; R250 DNP; R251 500K; D250; R253 100; C250 0.01uF; U202D MCP6004; R254 1500 .1%; R255 1500 .1%; OUT5

VBAT INP12 8.93k — 12V_bat 12.02; 50.2k; R320 39K 0.1%; R321 10K 1%; R322 10k; 2.443 2.160; D320; R323 100; C320 0.1uF; U203A MCP6004; 2.443 2.160; 2.426 2.160; R324 1500 .1%; R325 1500 .1%; 1.246 1.0798; OUT12
low pass filter knee at 10kHz or 100Hz with 10k series resistor

ALT CAM INP11 — R310 1k; R312 10k; R311 DNP; D310; R313 100; C310 0.01uF; U203B MCP6004; R314 1500 .1%; R315 1500 .1%; P11; OUT11
low pass filter knee at 100kHz typical or 1kHz with 10k series resistor

INP10 — R300 10k; R302 10k; R301 DNP; D300; R303 100; C300 0.01uF; U203C MCP6004; R304 1500 .1%; R305 1500 .1%; OUT10

ALT CRANK INP9 — R290 1k; R292 10k; R291 DNP; D290; R293 100; C290 0.01uF; PWR_FLAG; C291 0.1uF; U203D MCP6004; R294 1500 .1%; R295 1500 .1%; P9; OUT9

rusEFI.com		
Sheet: /adc_amp_divider/		
File: adc_amp_divider.sch		
Title: frankenso		
Size: B	Date: 2019-04-12	**Rev: 0.5.5**
KiCad E.D.A. kicad 4.0.7		Id: 3/15

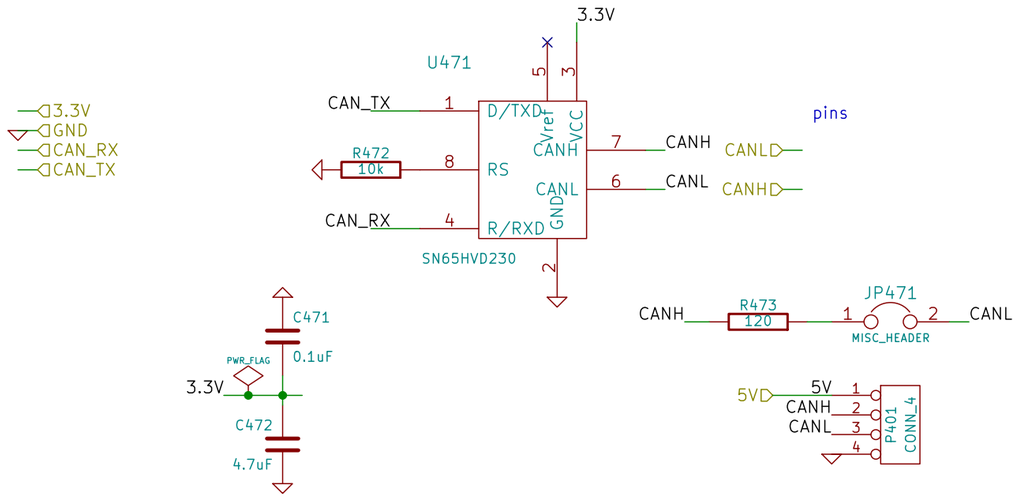

CAN level shifter

rusEFI.com		
Sheet: /can_brd_1/ File: can_brd_1.sch		
Title: frankenso		
Size: A	Date: 2019-04-12	**Rev: 0.5.5**
KiCad E.D.A. kicad 4.0.7		Id: 4/15

DD_HIP9011 ver.2
RusEfi.com

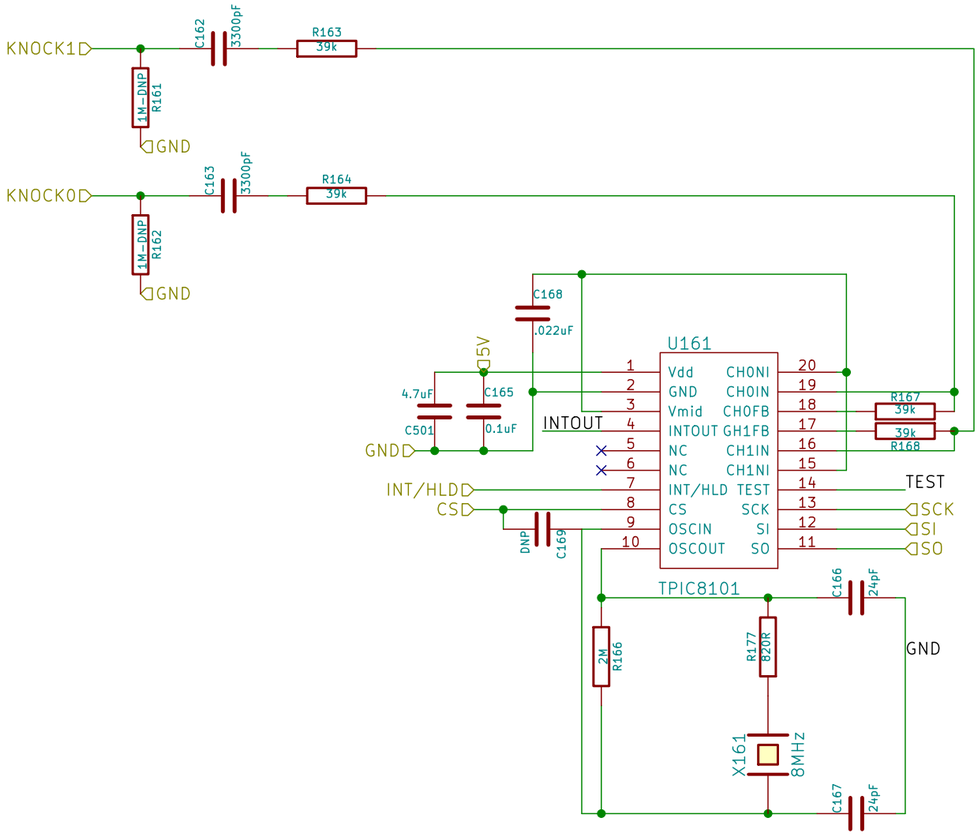

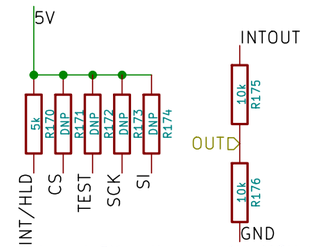

NOTE:
SPI uses internal 5V pull ups, with MCU SPI being float to pull down.
This allows 3.3V / 5V tolerante MCU's to use these SPI coms.

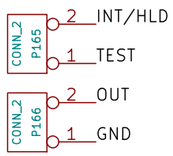

http://www.crystek.com/documents/appnotes/Pierce-GateIntroduction.pdf
PCB per predictions with SaturnPCB has less then 3.5pF traces,
TPIC pins assumed 5pF
ESR = 80ohms max
Rf = 2meg could be between 1meg and 10meg.
Cload should be 18pF per XTAL datasheet
Cload = ([Cin+C1][C2+Cout])/(Cin+C1+C2_Cout)+PCBstray
Cload = ([5+24][24+5])/(5+24+24+5)+3.5= 18.0pF
C1=C2=C166=C167 = 24pF
Rs = 1/(2piFC2) = 1/(2*pi*8MHz*24pF) = 829ohms, 820ohms is close enough = R177

rusEFI.com		
Sheet: /DD_HIP9011/		
File: DD_HIP9011.sch		
Title: frankenso		
Size: A	Date: 2019-04-12	**Rev: 0.5.5**
KiCad E.D.A. kicad 4.0.7		Id: 5/15

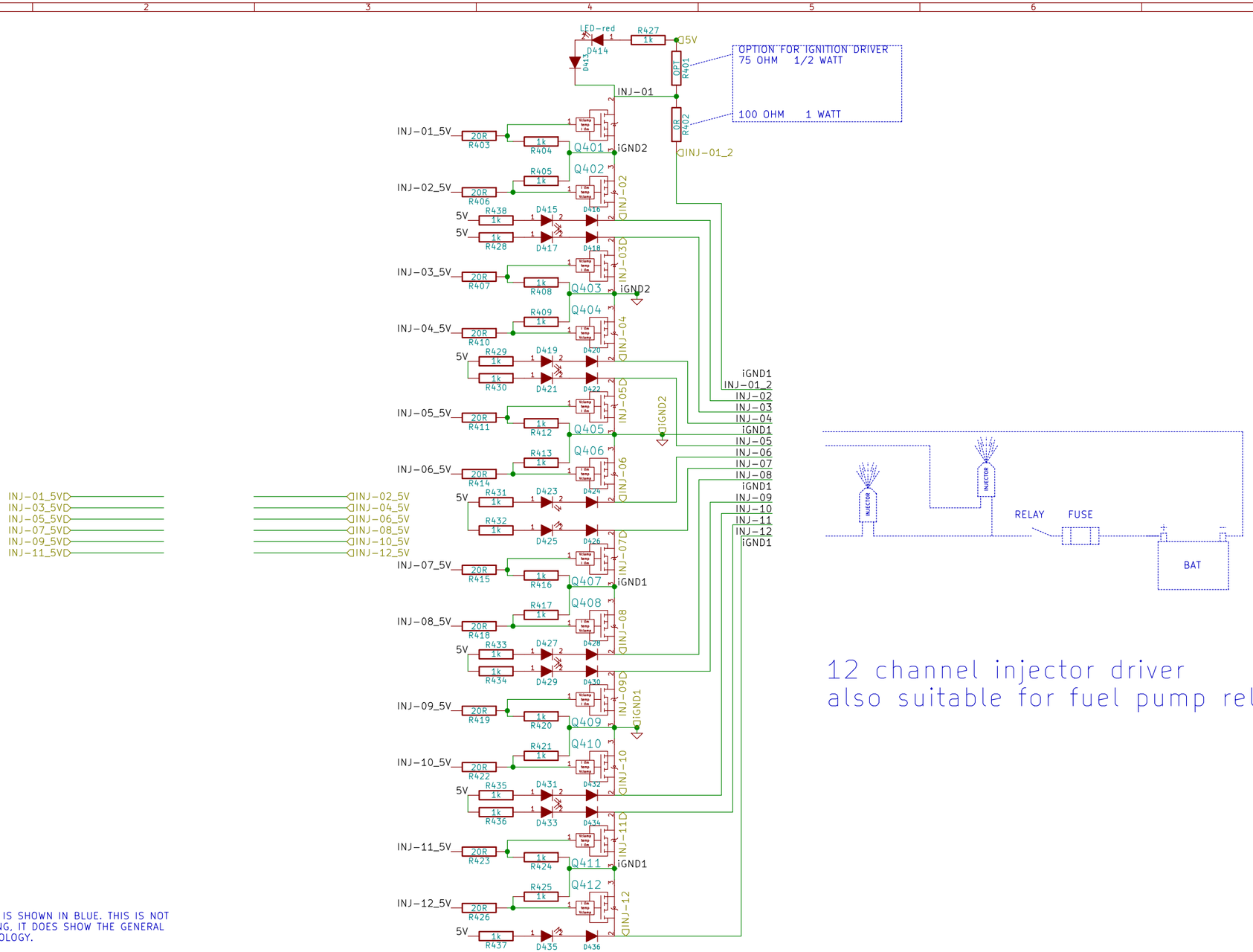

MISC NOTES

THE GENERAL SYSTEM LAYOUT IS SHOWN IN BLUE. THIS IS NOT THE SUGGESTED SYSTEM WIRING, IT DOES SHOW THE GENERAL OVERALL CIRCUIT LAYOUT TOPOLOGY.

THE PCB WIRING IS SHOWN IN RED, GREEN WITH A BLUE BUS.

Screw terminals 1760500000

Screw connector PCB http://octopart.com/39522-1007-molex-655409
Screw connector harness http://octopart.com/partsearch#search/requestData&q=39520-0007

rusEFI.com		
Sheet: /inj_12ch/		
File: inj_12ch.sch		
Title: frankenso		
Size: B	Date: 2019-04-12	**Rev: 0.5.5**
KiCad E.D.A. kicad 4.0.7		Id: 6/15

JUMPER WJ01 IS A BACKUP PLAN. THE VOLTAGE DROP ACROSS D703 MAY BE NOT TOLERABLE, SO WE HAVE A BACK UP PLAN IF WE NEED TO BYPASS THE DIODE WITH A LOWER VOLTAGE DROP

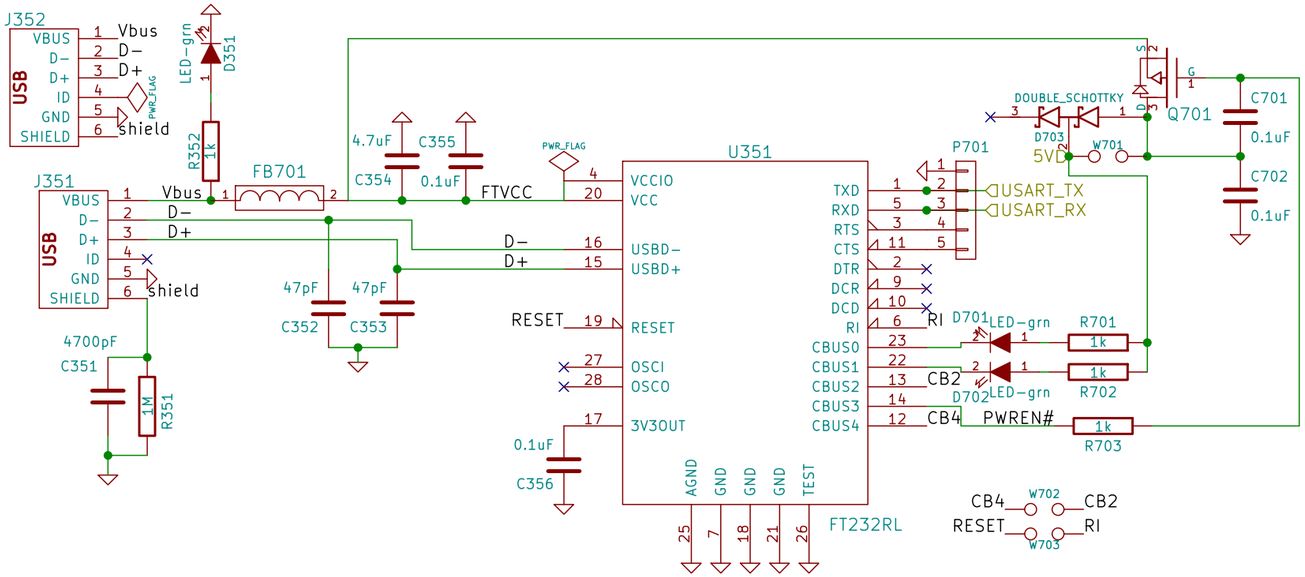

For right conn

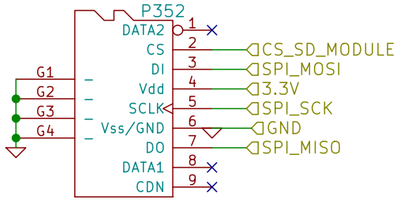

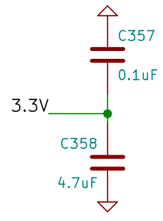

SD card slot
USB TTL module

rusEFI.com		
Sheet: /mmc_usb_1/ File: mmc_usb_1.sch		
Title: frankenso		
Size: A	Date: 2019−04−12	**Rev: 0.5.5**
KiCad E.D.A. kicad 4.0.7		Id: 7/15

When configured for VR, DNP W1002 or W1003.
These jumpers allow isolation which prevents the VR signal from getting into the 5V or GND.

Recommended pull-up resistor values are as follows:					
Volts dc	5	9	12	15	24
Ohms	1k	1.8k	2.4k	3k	3k

Many Hall sensors are set as a open collector sinking topology.
Those setups require a pull up resistor, and 1k ohm is a common size.
These pull up resistors are noted as R137 and R141 on this page.
You need to match these pull up resistors with your hall sensors requirements.
Often you need about 5mA of drive. See snippet from Cherry hall sensors to the right.
Some sensors are the inverse, and need a pull down resistor. These are less common.
These pull down resistors are noted as R801 and R802 on this page and are not typically installed.

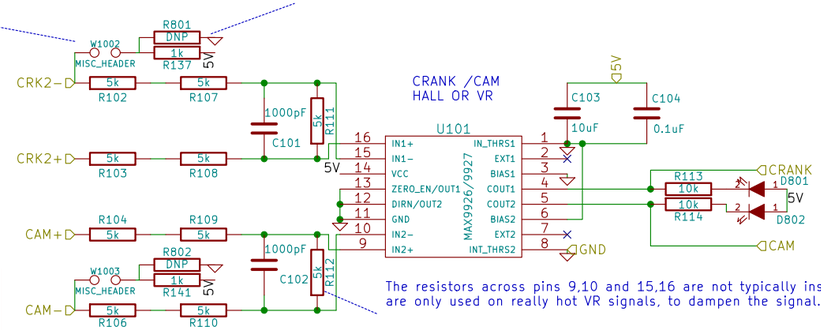

The resistors across pins 9,10 and 15,16 are not typically installed, they are only used on really hot VR signals, to dampen the signal.

rusEFI.com
Sheet: /cps_vrs_io_1/
File: cps_vrs_io_1.sch
Title: frankenso
Size: B | Date: 2019−04−12 | **Rev: 0.5.5**
KiCad E.D.A. kicad 4.0.7 | Id: 8/15

Brief overview
-- Q1002, R1003, D1002 preform an active transient protection. It will suppress voltages up to 200V down to 19V.
-- Q1001, R1001, D1001 preform a reverse polarity protection. If the input signal is the wrong polarity, the gate will not conduct which will prevent current from flowing.
-- D1003 is a second transient suppressor, it would catch faster transients allowing a brief amount of time for Q1002 to preform it's duty.
-- L1003 is a choke, it simple prevents switching noise from going up the power wire where it can get into other circuits.
-- C1001 is a bulk cap, it simply stores energy locally such that the regulator can draw large currents in short periods of time.
-- U1001 and the components to the right, are a buck style switching regulator, that will pull the 5V line up to 5V. It will not pull it down from 5V if there is an external voltage.
The U1001 circuit has been designed for 3A output and up to 20V input, but typically 14.4V or 12.4V input. L1001 wants to be about 68uH to 100uH with less than 0.3 ohms resistance.

200V surge, 18V to 7V typical.
Suggested mininium 16awg
Upstream 1A fuse littel fuse 0287001

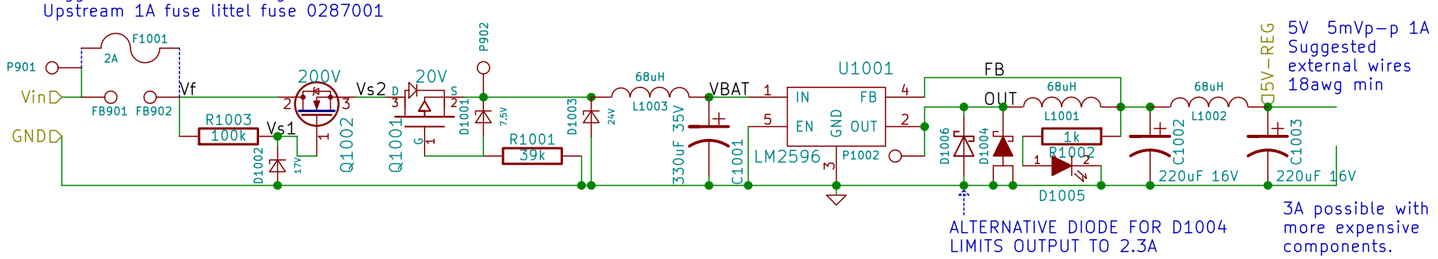

Alternate options
Q1002 Microchip,DN2625K4-G with FAIRCHILD,1N5247B
D1002 IXYS,IXTA6N50D2 with FAIRCHILD,1N5244B
D1004 VISHAY,VS-50WQ04FN-M3 with VISHAY,VS-50WQ04FNPBF

rusEFI.com		
Sheet: /PWR_buck_12V_switcher/		
File: PWR_buck_12V_switcher.sch		
Title: frankenso		
Size: A	Date: 2019-04-12	**Rev: 0.5.5**
KiCad E.D.A. kicad 4.0.7		Id: 9/15

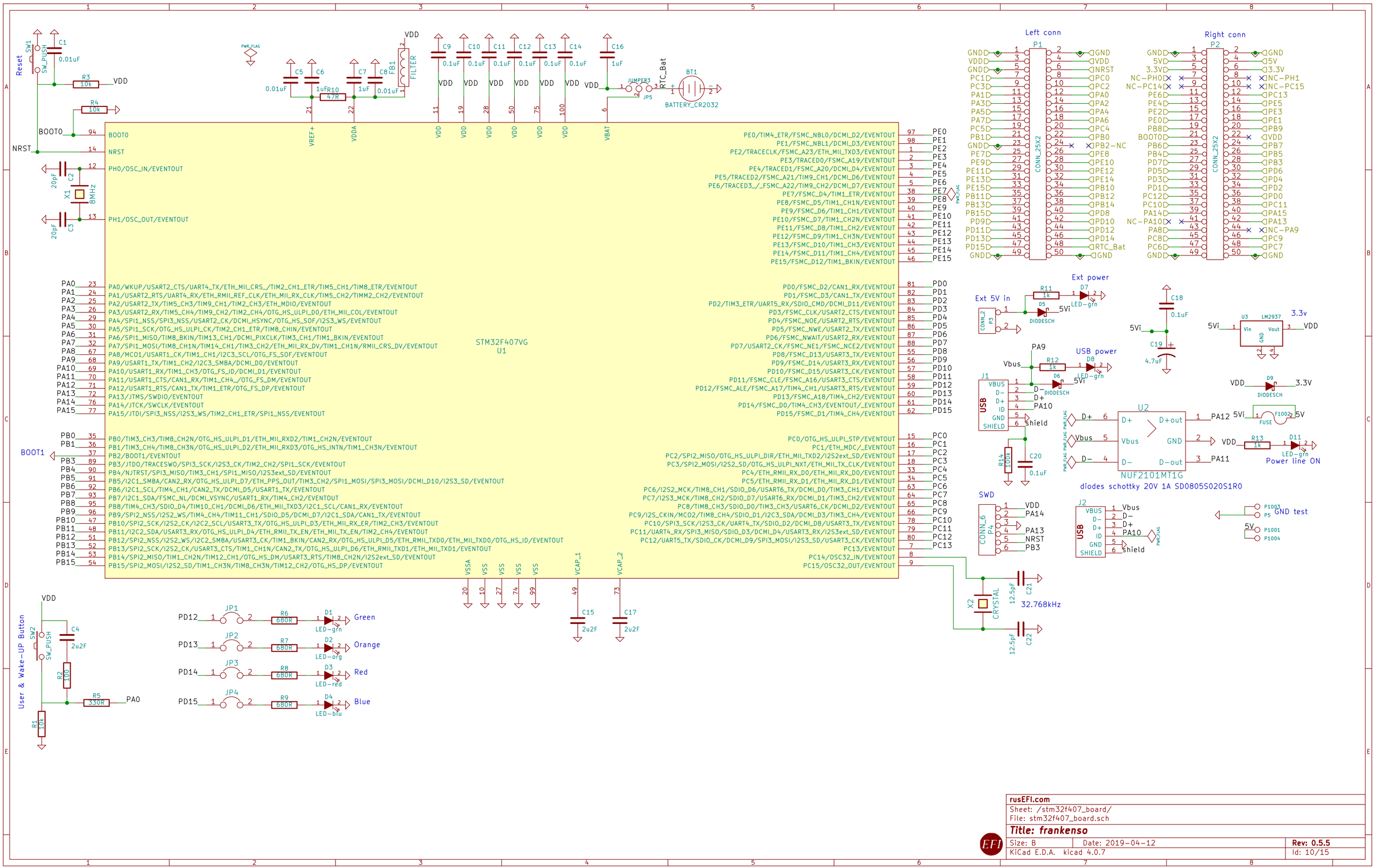

rusEFI.com
Sheet: /stm32f407_board/
File: stm32f407_board.sch
Title: frankenso
Size: B | Date: 2019-04-12 | Rev: 0.5.5
KiCad E.D.A. kicad 4.0.7 | Id: 10/15

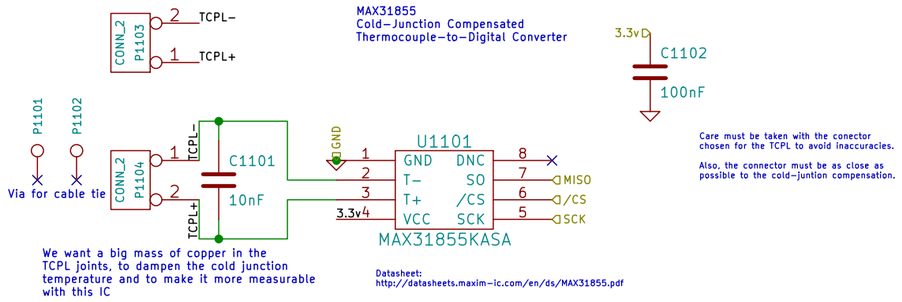

rusEFI.com		
Sheet: /thermocouple1/ File: thermocouple_module.sch		
Title: frankenso		
Size: A	Date: 2019-04-12	**Rev: 0.5.5**
KiCad E.D.A. kicad 4.0.7		Id: 11/15

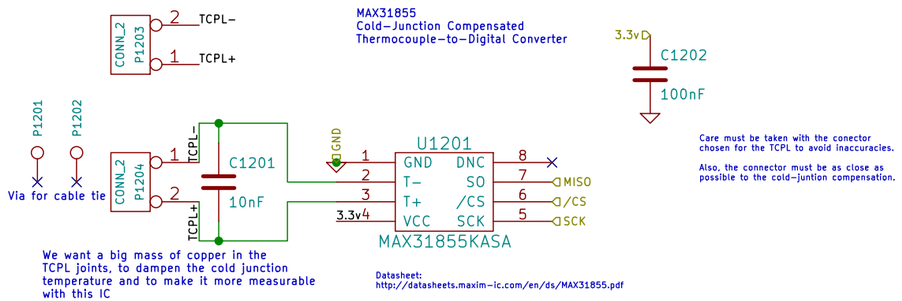

rusEFI.com		
Sheet: /thermocouple2/ File: thermocouple_module.sch		
Title: frankenso		
Size: A	Date: 2019-04-12	**Rev: 0.5.5**
KiCad E.D.A. kicad 4.0.7		Id: 12/15

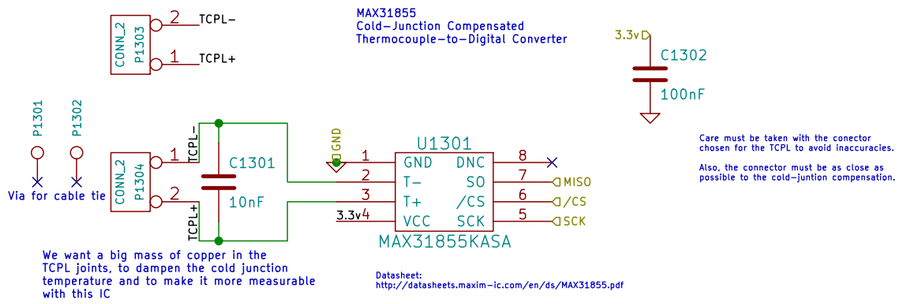

rusEFI.com		
Sheet: /thermocouple3/ File: thermocouple_module.sch		
Title: frankenso		
Size: A	Date: 2019-04-12	**Rev: 0.5.5**
KiCad E.D.A. kicad 4.0.7		Id: 13/15

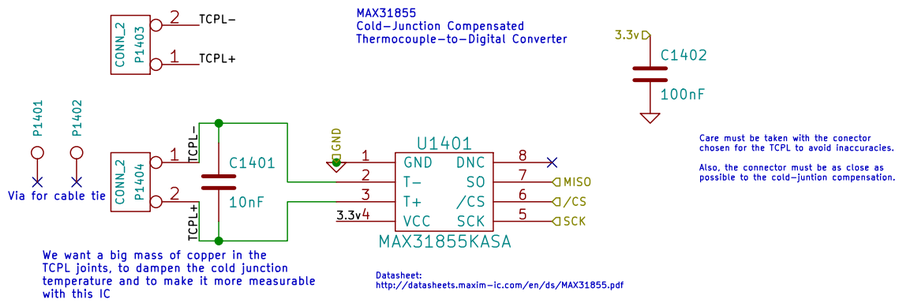

rusEFI.com		
Sheet: /thermocouple4/ File: thermocouple_module.sch		
Title: frankenso		
Size: A	Date: 2019-04-12	**Rev: 0.5.5**
KiCad E.D.A. kicad 4.0.7		Id: 14/15

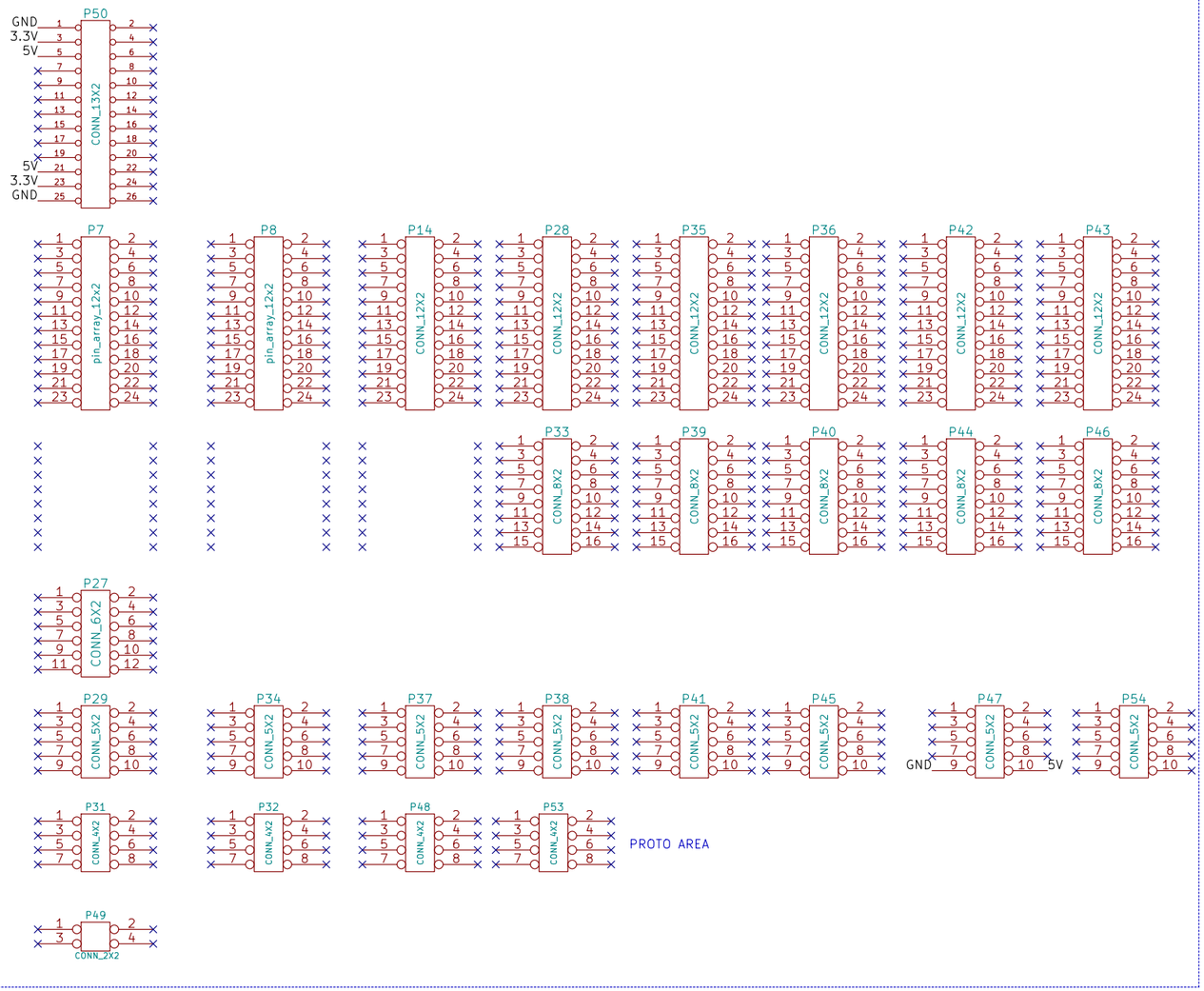

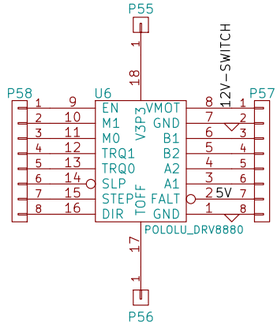

These two jumpers
are here to accomodate
stm32f4discovery

These four jumpers
are test points

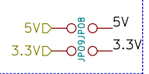

That's alternative signal
OUTPUT - these traces
should be routable to PC6
and PA5 via jumpers.
Aleternative to W212 and
W212 routung of op-amps
ch 11 and ch 12

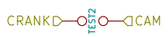

See below links about barriers in GND planes. The current loops in the layout do not appear to need barriers.

http://rusefi.com/wiki/index.php?title=Manual:Hardware:PCB_design_rules
http://www.maximintegrated.com/en/app-notes/index.mvp/id/5450

rusEFI.com		
Sheet: /Misc_Vias/ File: Misc_Vias.sch		
Title: frankenso		
Size: B	Date: 2019-04-12	**Rev: 0.5.5**
KiCad E.D.A. kicad 4.0.7		Id: 15/15