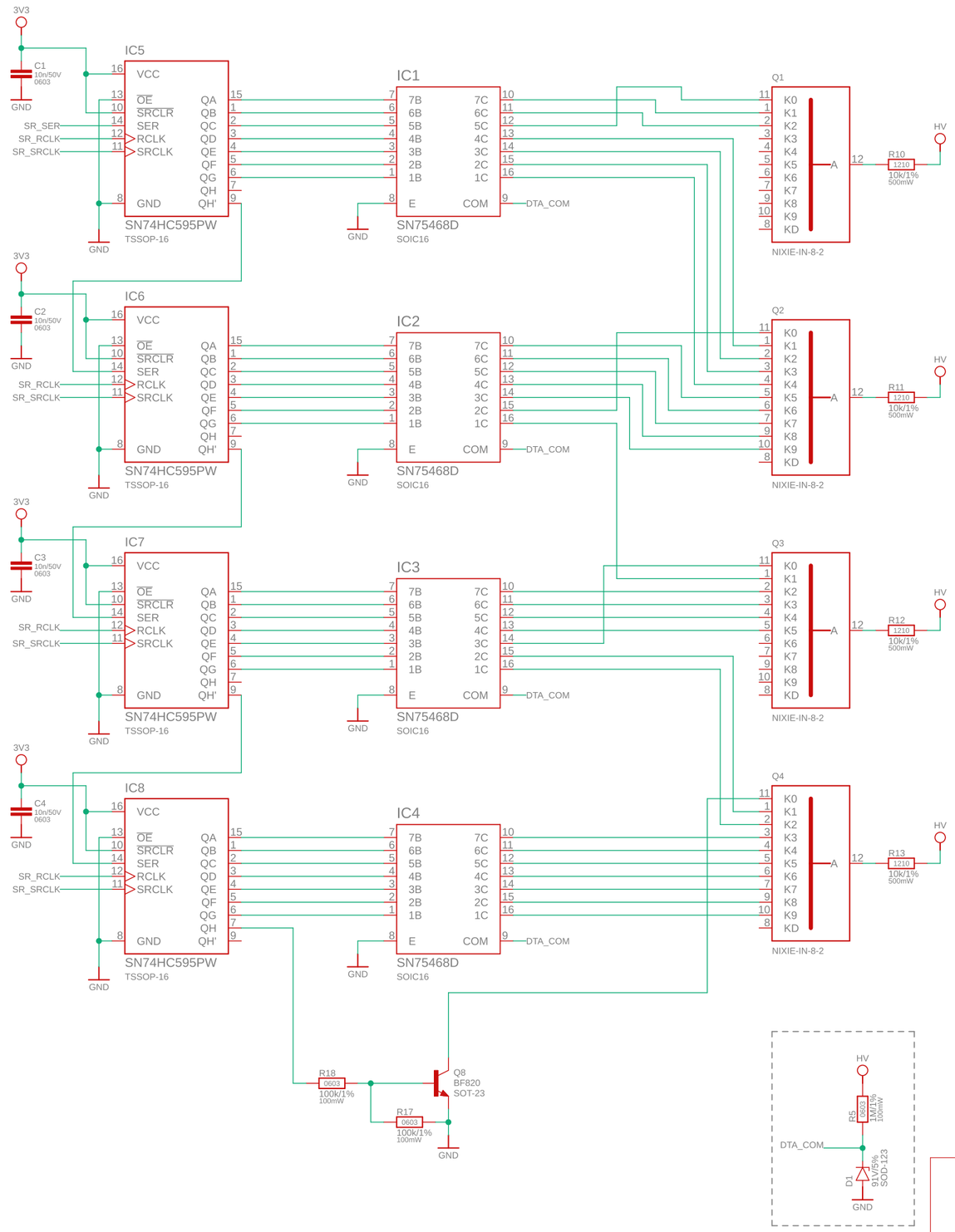

NixieClock

2020-12-08 00:05

Sheet: 1/4

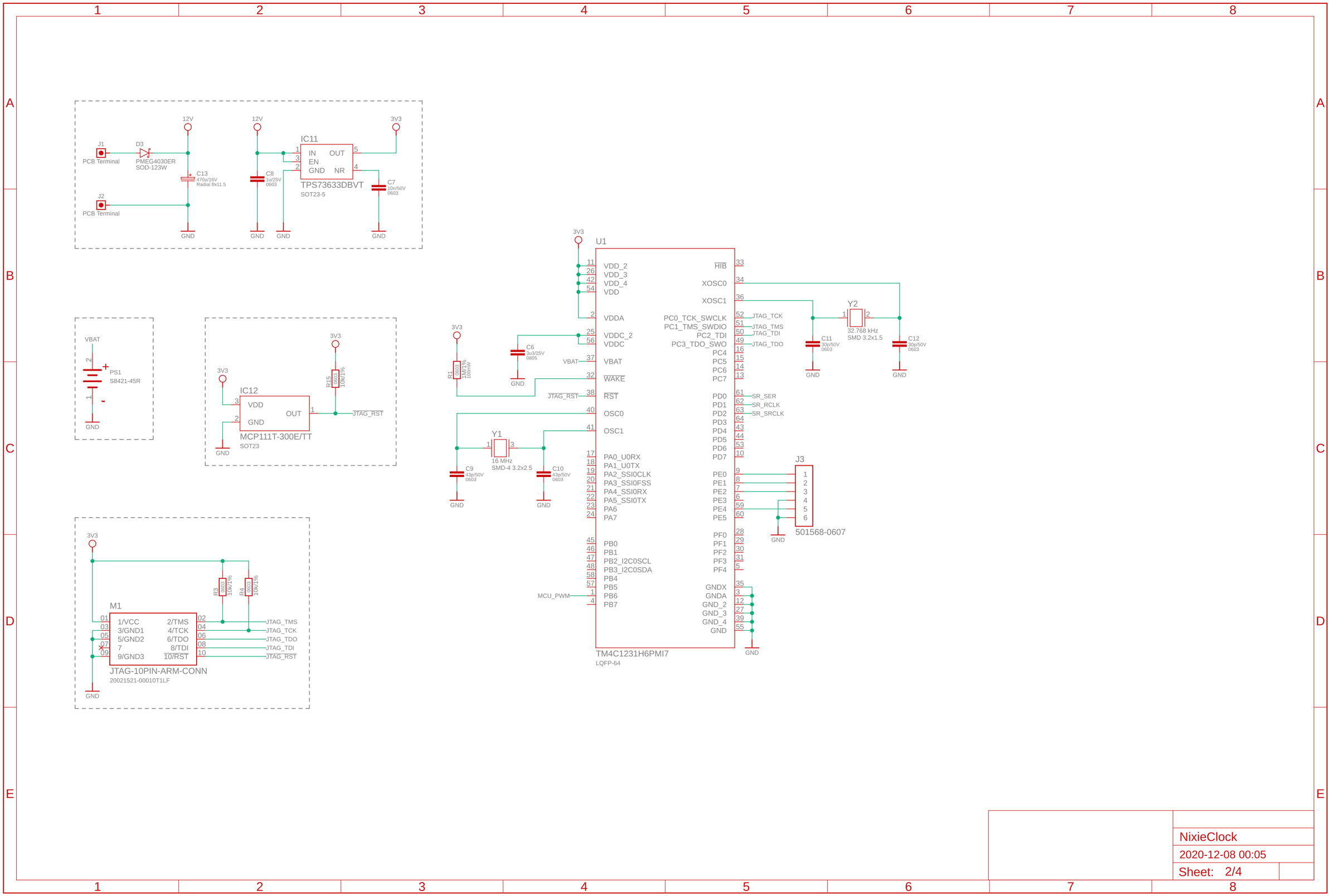

NixieClock

2020-12-08 00:05

Sheet: 2/4

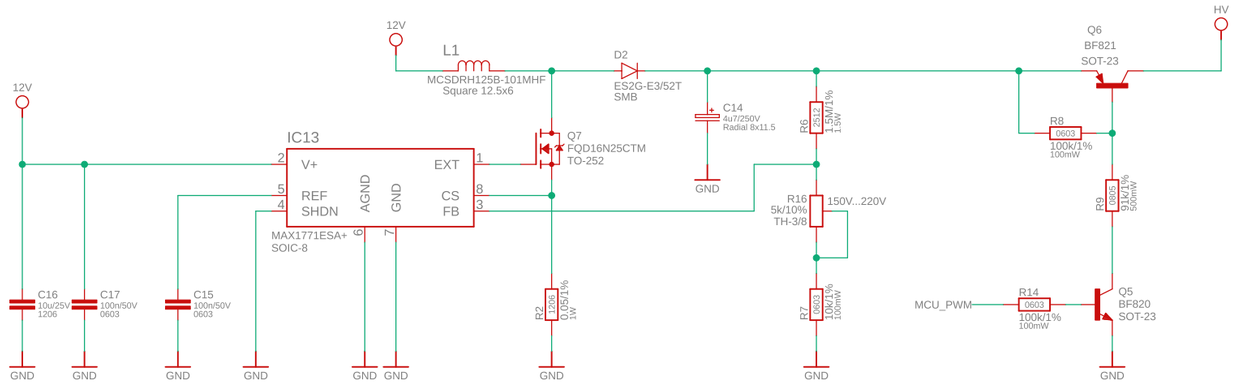

NixieClock

2020-12-08 00:05

Sheet: 3/4