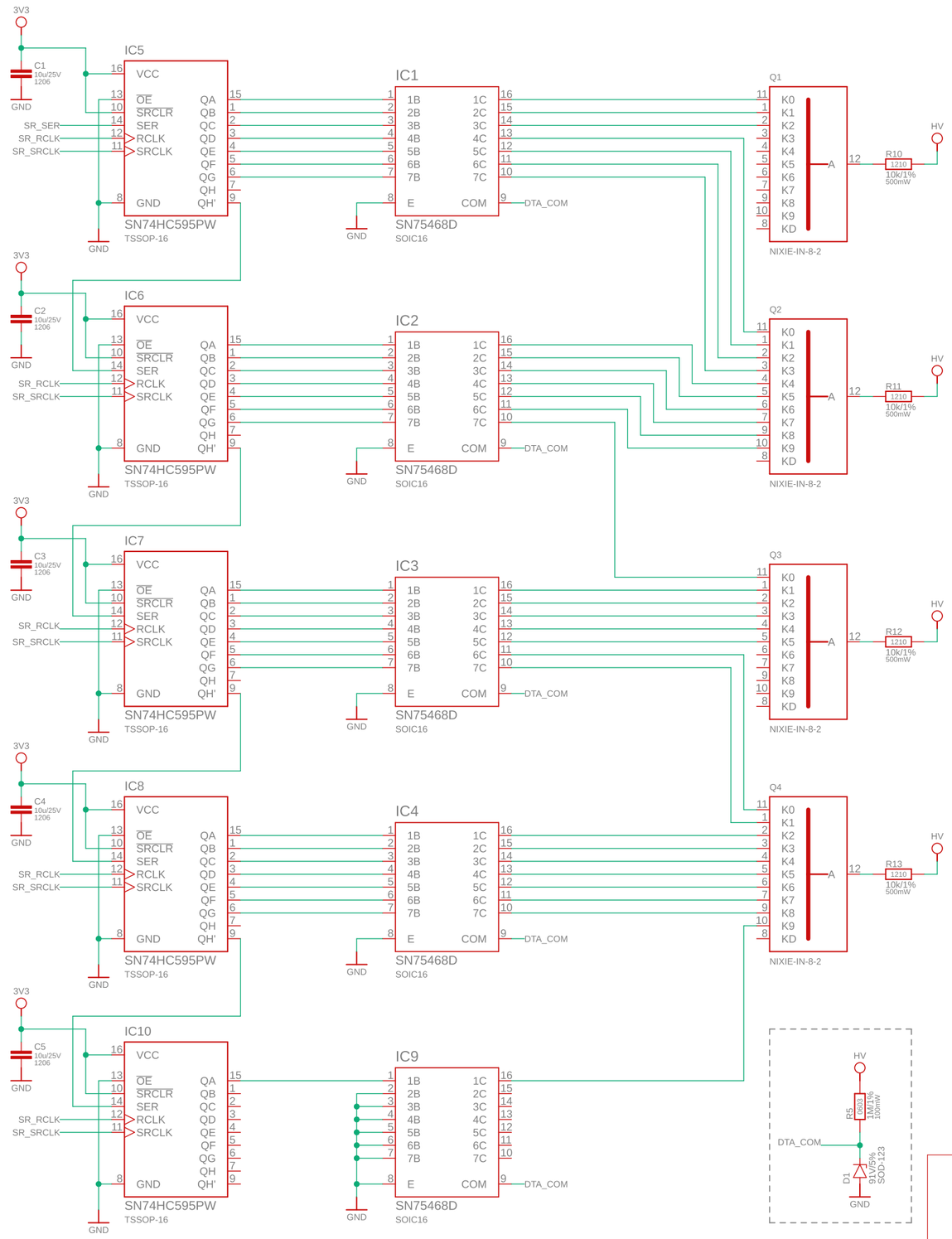

NixieClock

2020-12-02 23:29

Sheet: 1/3

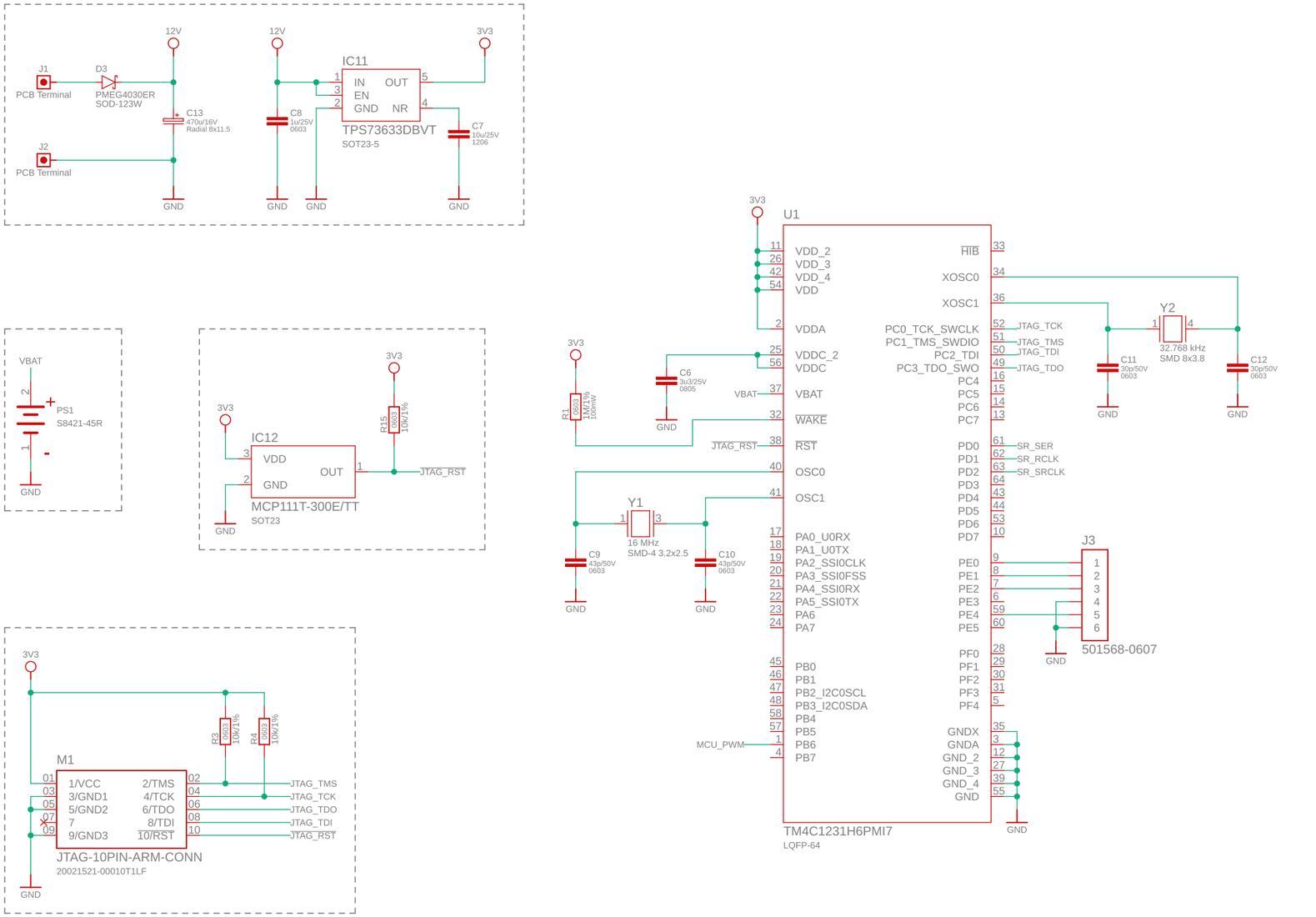

NixieClock

2020-12-02 23:29

Sheet: 2/3

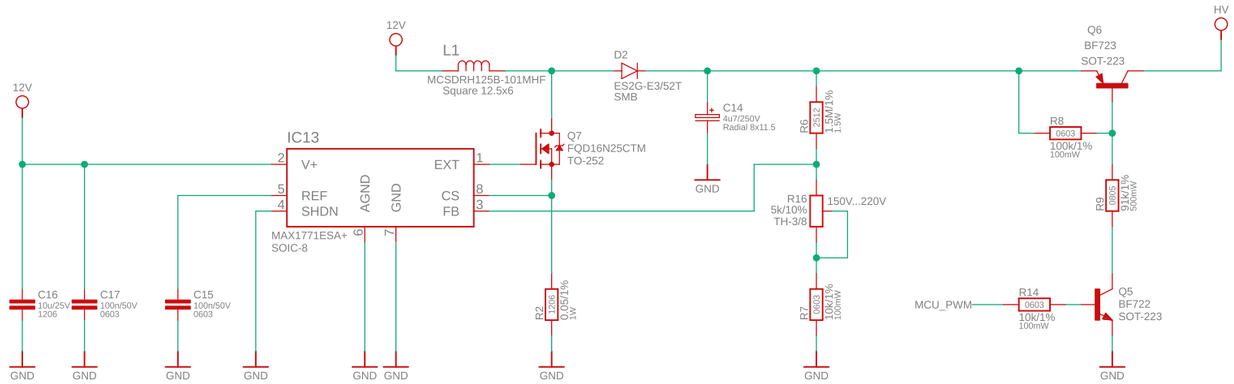

NixieClock

2020-12-02 23:29

Sheet: 3/3