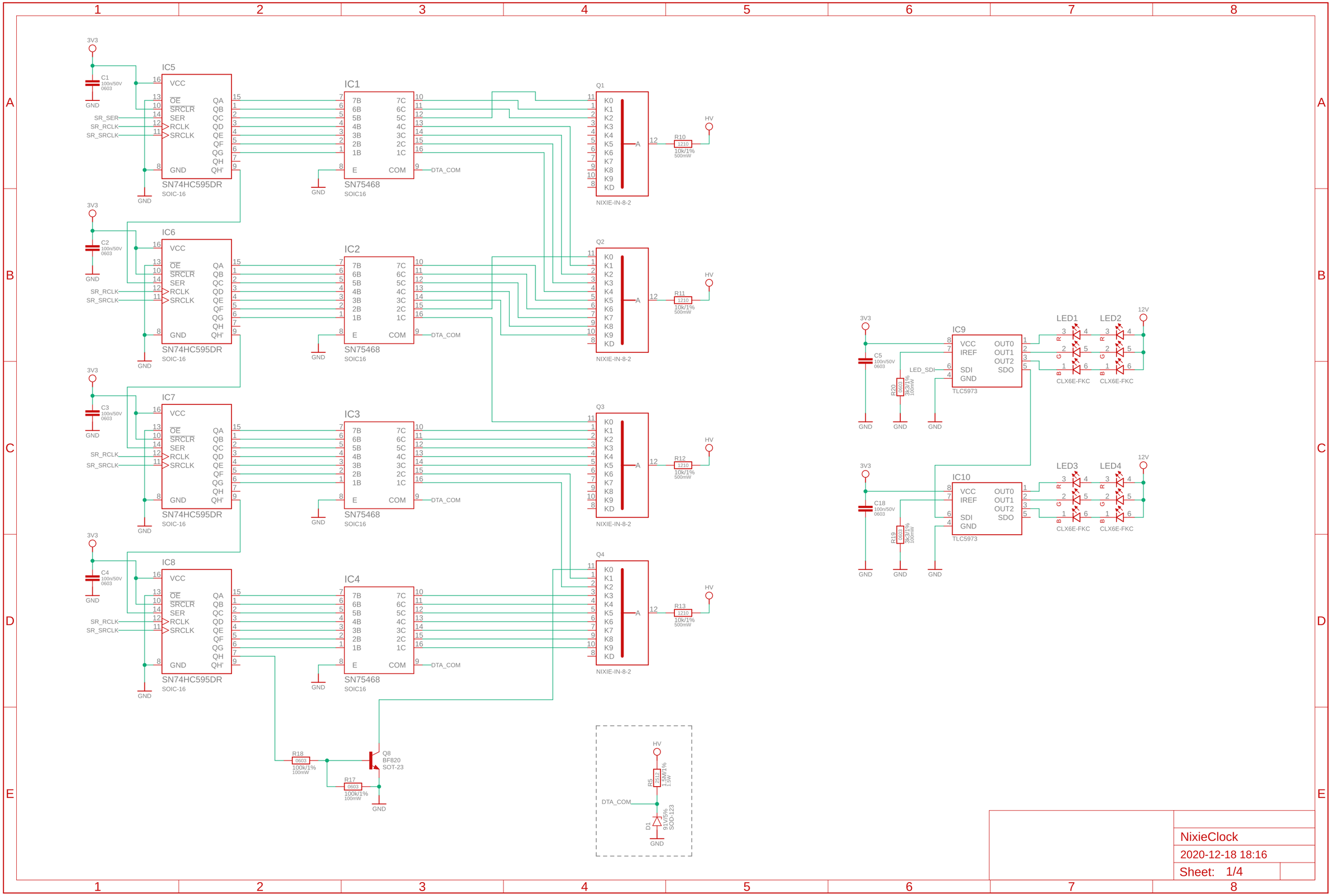
IC5
IC6
IC7
IC8
SN74HC595DR
SOIC-16
IC1
IC2
IC3
IC4
SN75468
SOIC16
Q1
Q2
Q3
Q4
NIXIE-IN-8-2
IC9
IC10
TLC5973
LED1
LED2
LED3
LED4
CLX6E-FKC
SR_SER
SR_RCLK
SR_SRCLK
LED_SDI
DTA_COM
HV
12V
3V3
GND
R10
R11
R12
R13
R18
R17
Q8
BF820
SOT-23
R5
D1
NixieClock
2020-12-18 18:16
Sheet: 1/4

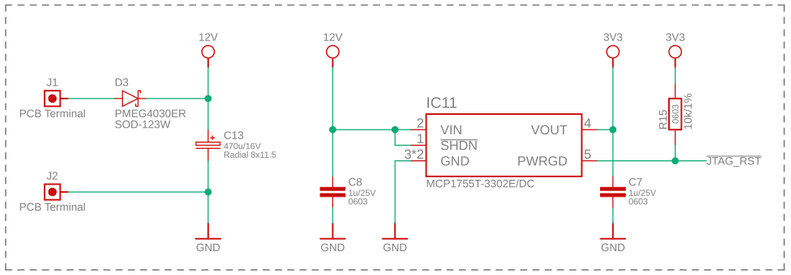

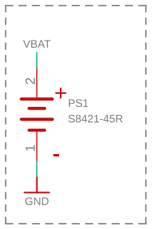

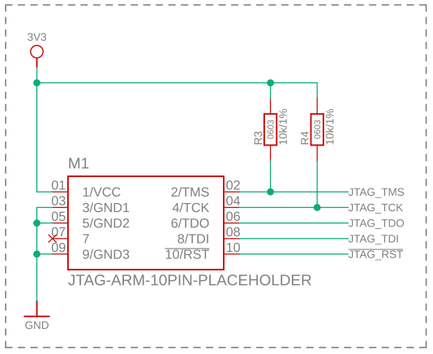

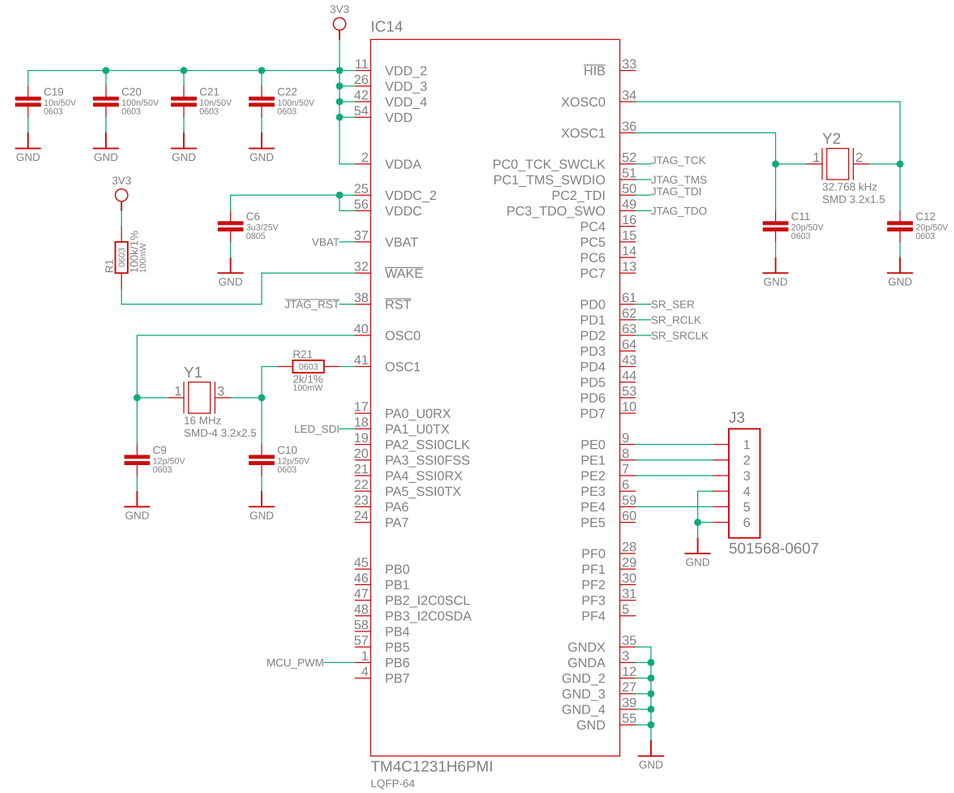

NixieClock	
2020-12-18 18:16	
Sheet: 2/4	

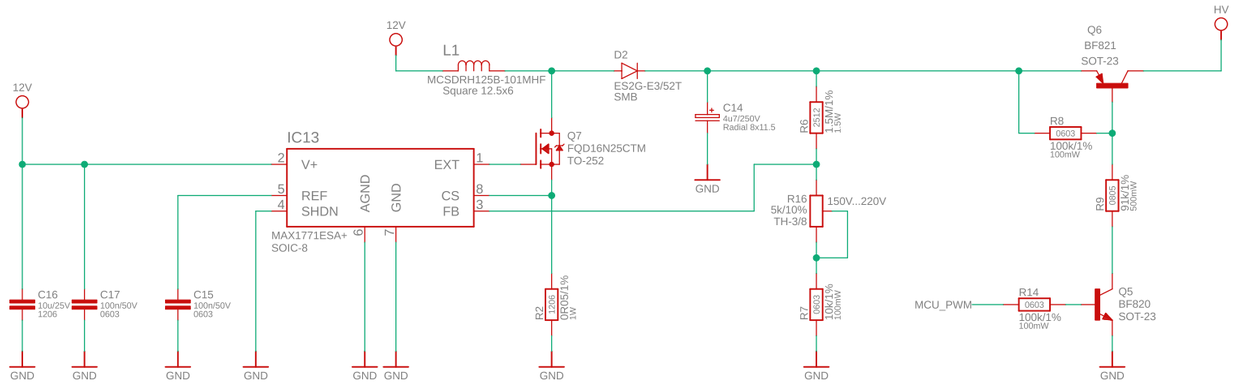

NixieClock

2020-12-18 18:16

Sheet: 3/4