Fonte 5V

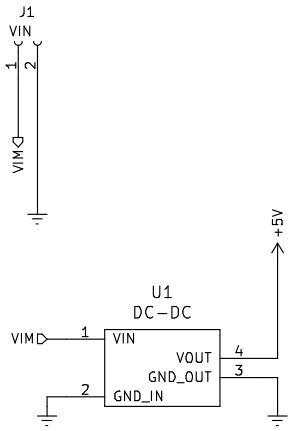

Bluetooth

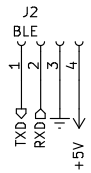

Driver

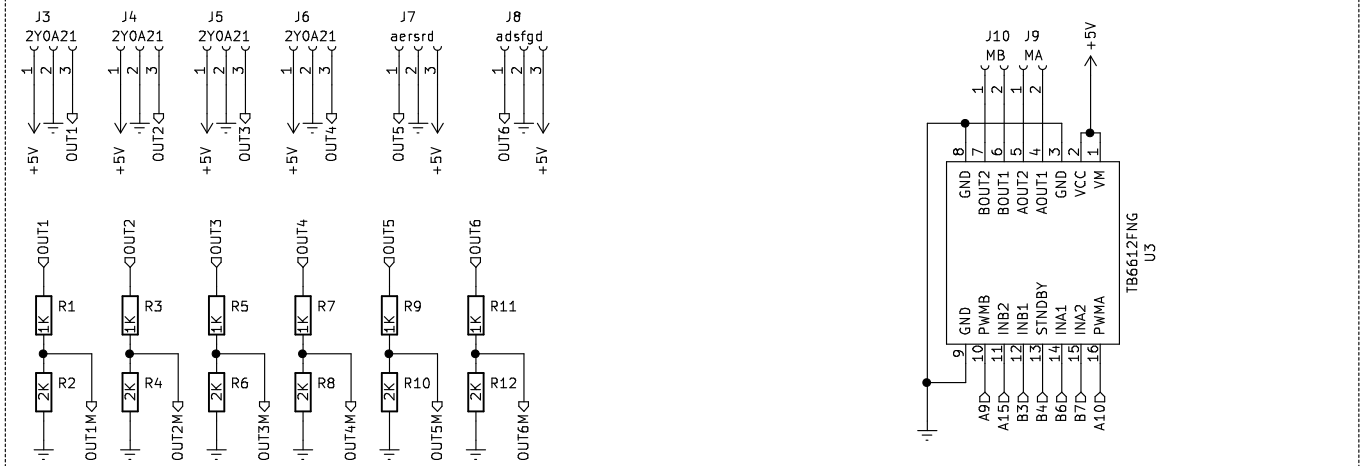

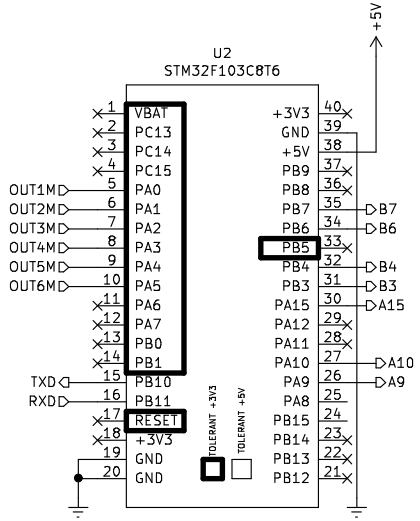

Informações Driver

Features

- Power supply voltage: V_M = 15 V(Max)
- Output current: I_{OUT}=1.2 A(ave) / 3.2 A (peak)
- Output low ON resistor: 0.5 Ω (upper+lower Typ. @V_M ≥ 5 V)
- Standby (Power save) system
- CW / CCW / short brake / stop function modes
- Built-in thermal shutdown circuit and low voltage detecting circuit
- Small faced package(SSOP24: 0.65 mm Lead pitch)
- Response to Pb free packaging

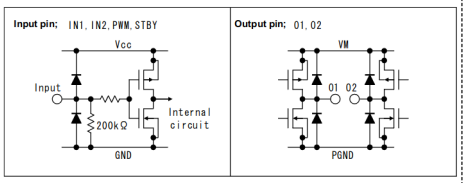

PROJECT: ICEcube		Date: 2019-07-31
CIRCUIT: Placa controladora ICEcube		Rev: REV 00.01
COMMENT:		Page: 1/1
AUTHOR[1]: Pedro Igor B. S. AUTHOR[2]: Wesley Calsonari AUTHOR[3]:		