NODEMCU E ALIMENTAÇÃO EXTERNA

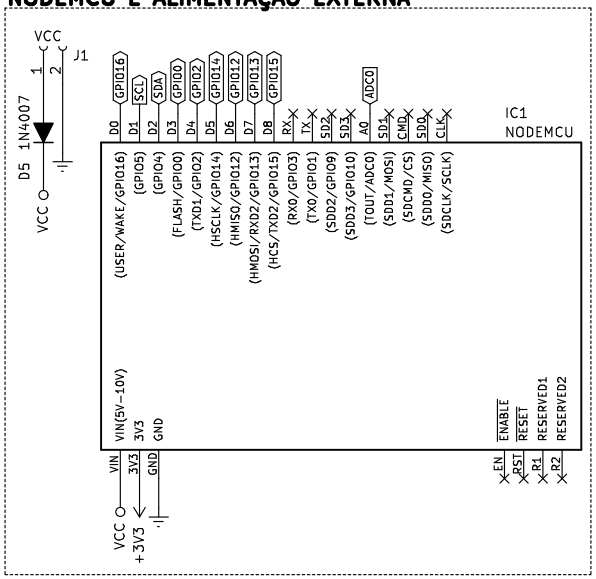

INTERFACE DE ENTRADA E SAIDA

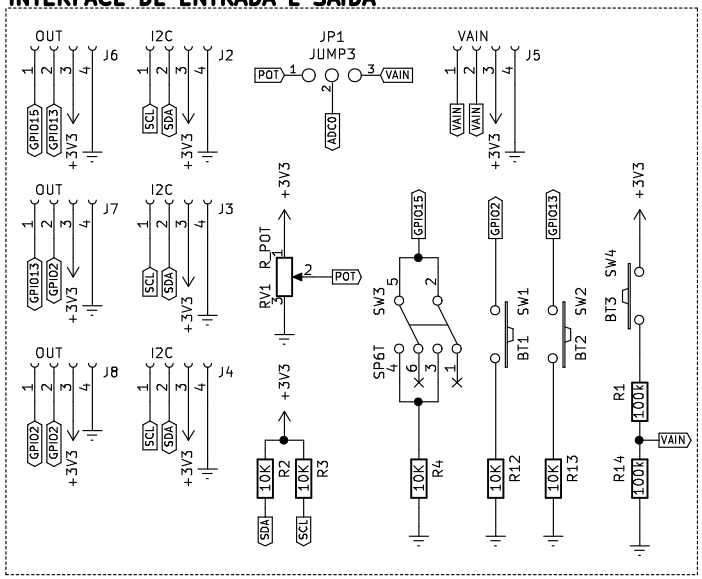

INTERFACE VISUAL

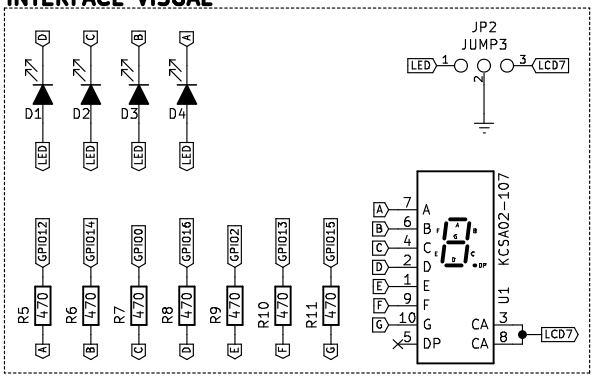

PROJECT: SHILD IoT		**Date:** 2018-10-14
CIRCUIT: SHILSHILD IoT-IFSP		**Rev:** 3.4
COMMENT:		Page: 1/1
AUTHOR[1]: Pedro Igor Borçatti da Silva AUTHOR[2]: Prof.° Ms. -Rogerioa Daniel Dantas AUTHOR[3]:		