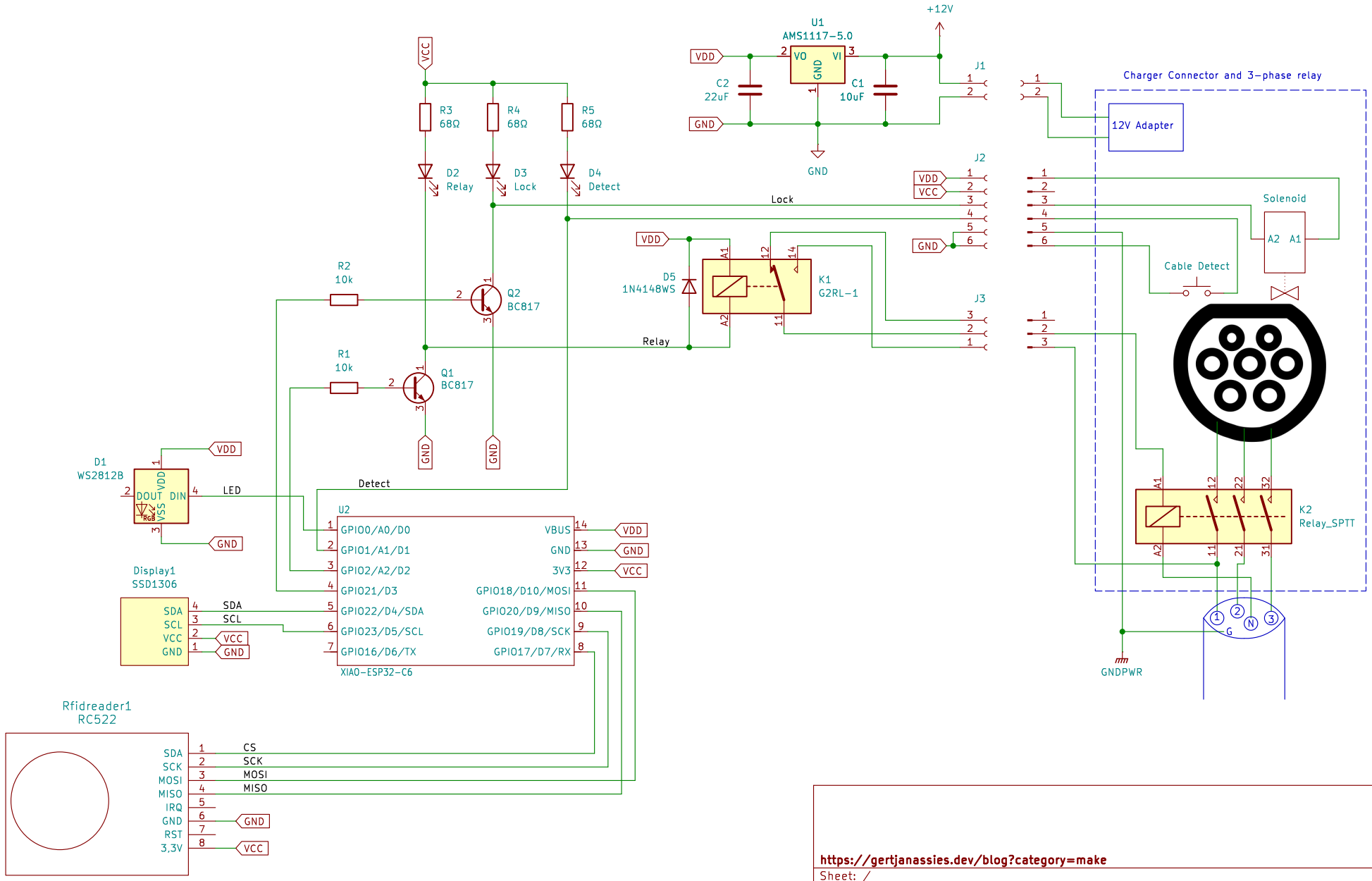

https://gertjanassies.dev/blog?category=make

Sheet: /

File: esp32c6-charger.kicad_sch

Title: ESP32-C6 EV Charger

Size: A4	Date: 2025-08-22	Rev:
KiCad E.D.A. 9.0.4		Id: 1/1