NOVEMBER	TOPIC
4	U/G MINE DEVELOPMENT

Mine development

- Accessing the mineral deposit;
- Provision of accurate geological information to aid the production process;
- Providing accurate information on other technical needs

All underground mining development openings can be classified into four categories:

1. To open production accessways
2. To obtain information
3. To construct service facilities
4. Combinations of the first three categories

- Determination of the burden and spacing for the cut holes,
- Determination of the burden and spacing for the main blastholes or production holes, also called easers, for the holes that blast upward into the cut area

NOVEMBER	TOPIC
4	SOFT-ROCK EQUIPMENT SELECTION AND SIZING

INTRODUCTION

Soft-rock mining predominantly applies to coal mining but is also applicable to other bedded soft mineral deposits.

Therefore, although this lecture primarily focuses on underground coal mining, certain aspects are relevant to mineral deposits such as trona.

INTRODUCTION

Underground coal mining fall into the following principal categories:

- Longwall (full-extraction) operations
- Room-and-pillar(partial-extraction) operations
- Room-and-pillar (first-workings) operations

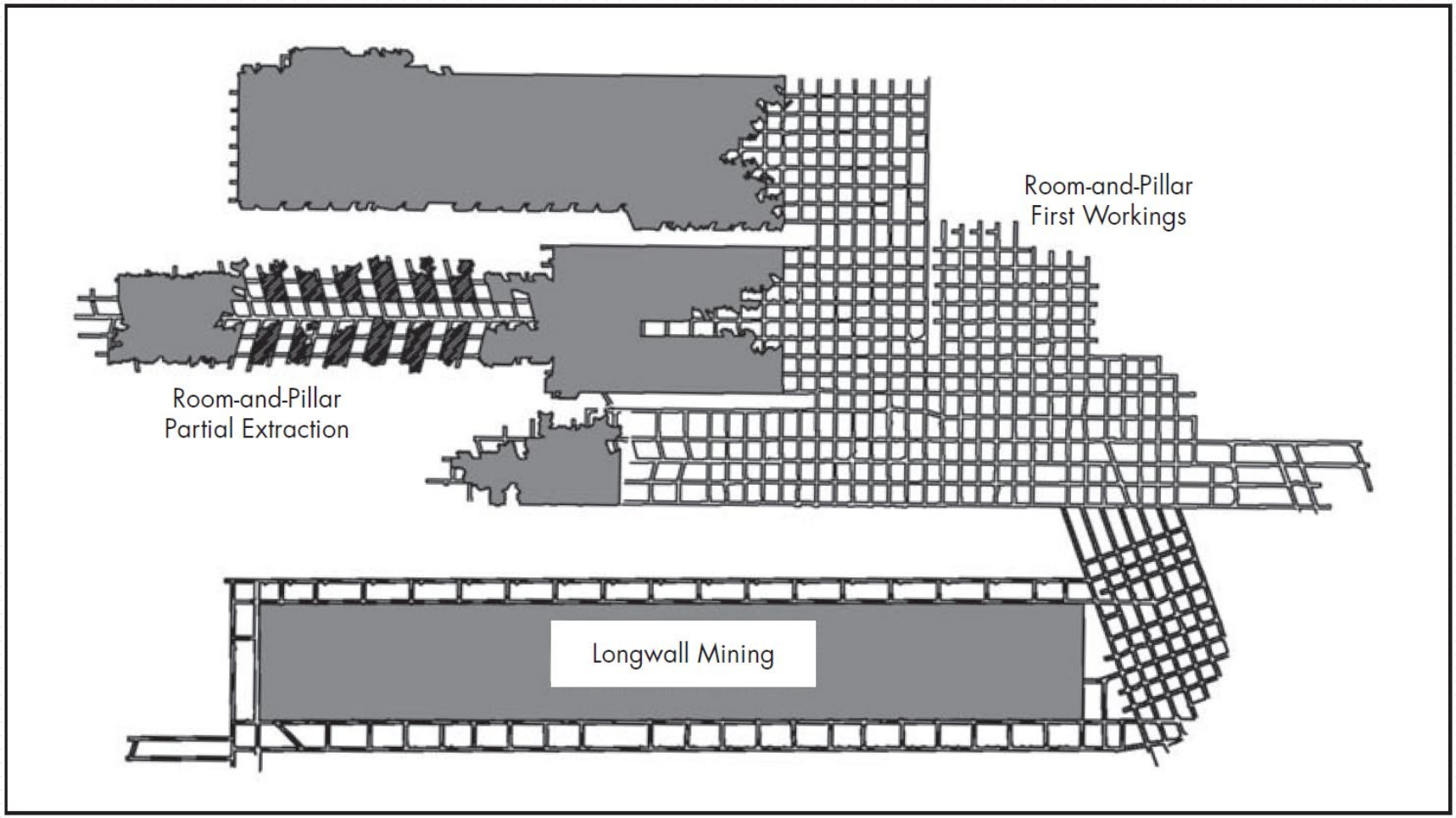
Room-and-Pillar
First Workings
Room-and-Pillar
Partial Extraction
Longwall Mining

Continuous miner in a room-and-pillar operation

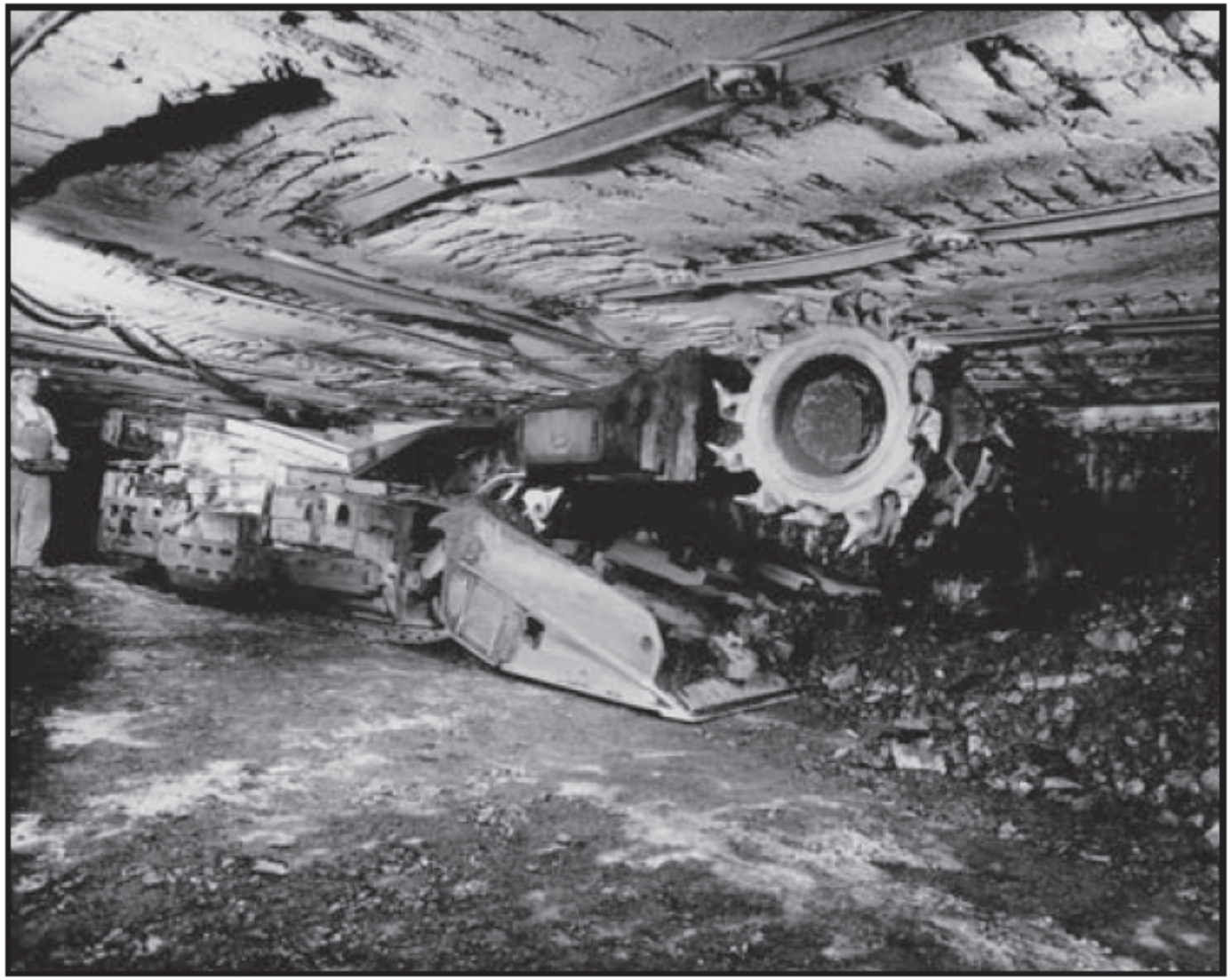

Schematic view of longwall system

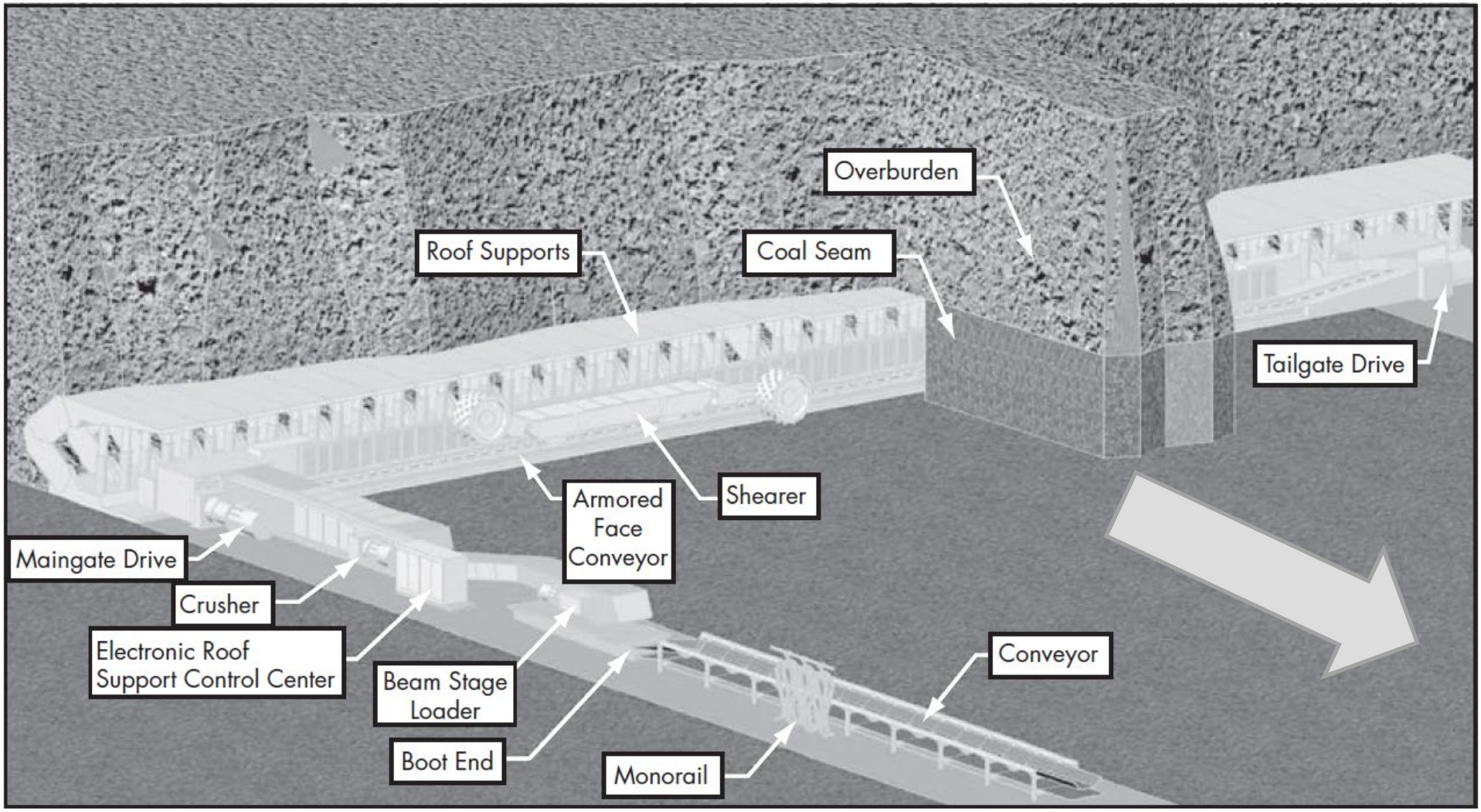

LONGWALL MINING – Roof Supports

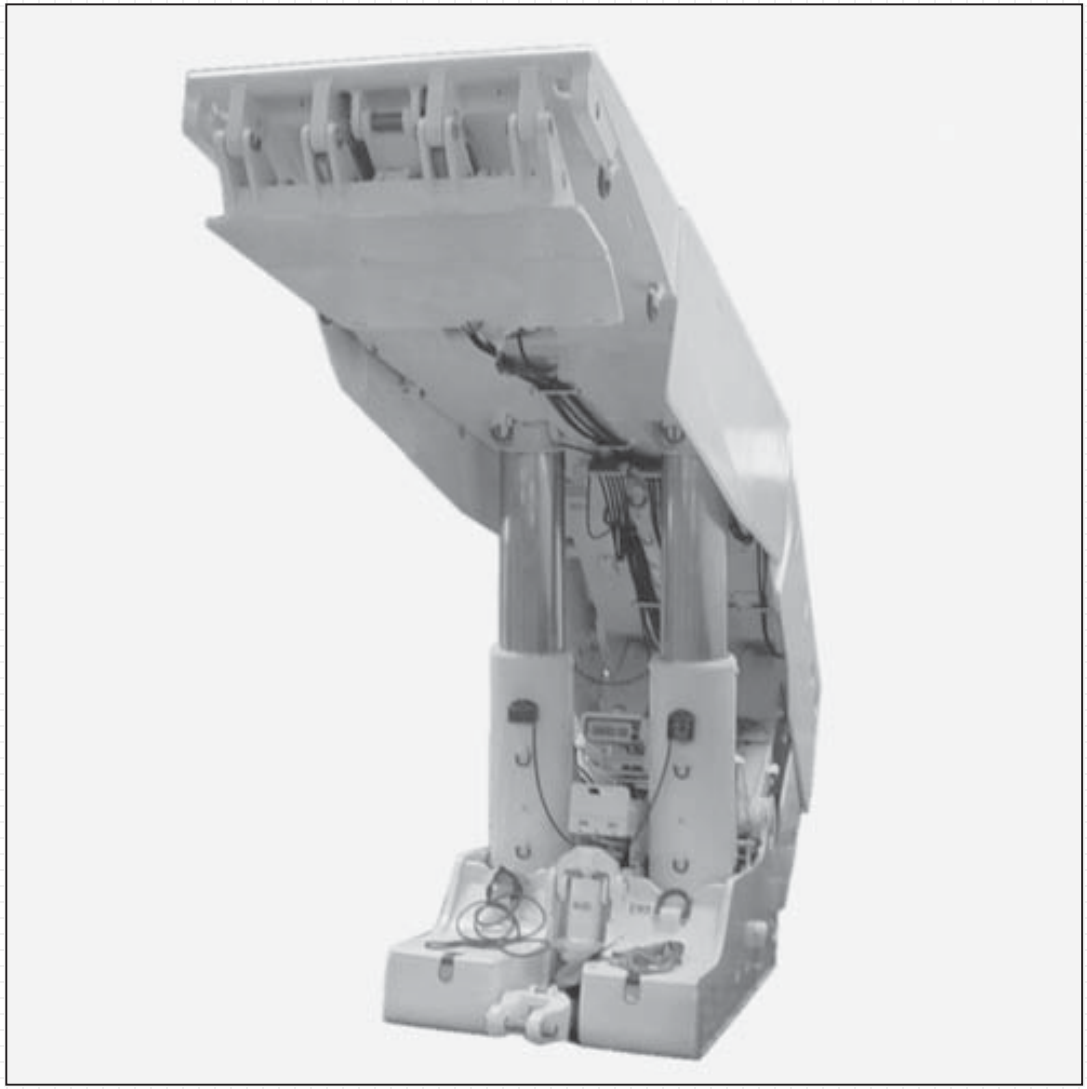

LONGWALL MINING – Roof Supports

When specifying roof supports, various options are available, including the following:

- Four-leg versus two-leg supports (because of advance- ments in cylinder technology and capacity and because of lemniscate design, two-leg supports are now more popular)
- Front walkway, rear walkway, or both (rear walkways are often used in thick seams to offer more protection against face spall)

LONGWALL MINING – Roof Supports

When specifying roof supports, various options are available, including the following:

- Side shields on one or both sides (used to push supports uphill)
- Face sprags or flippers (used to prevent face spall in thick seams)
- Base lift systems (used to raise shield prior to advance when in boggy floor)

LONGWALL MINING – Shearer

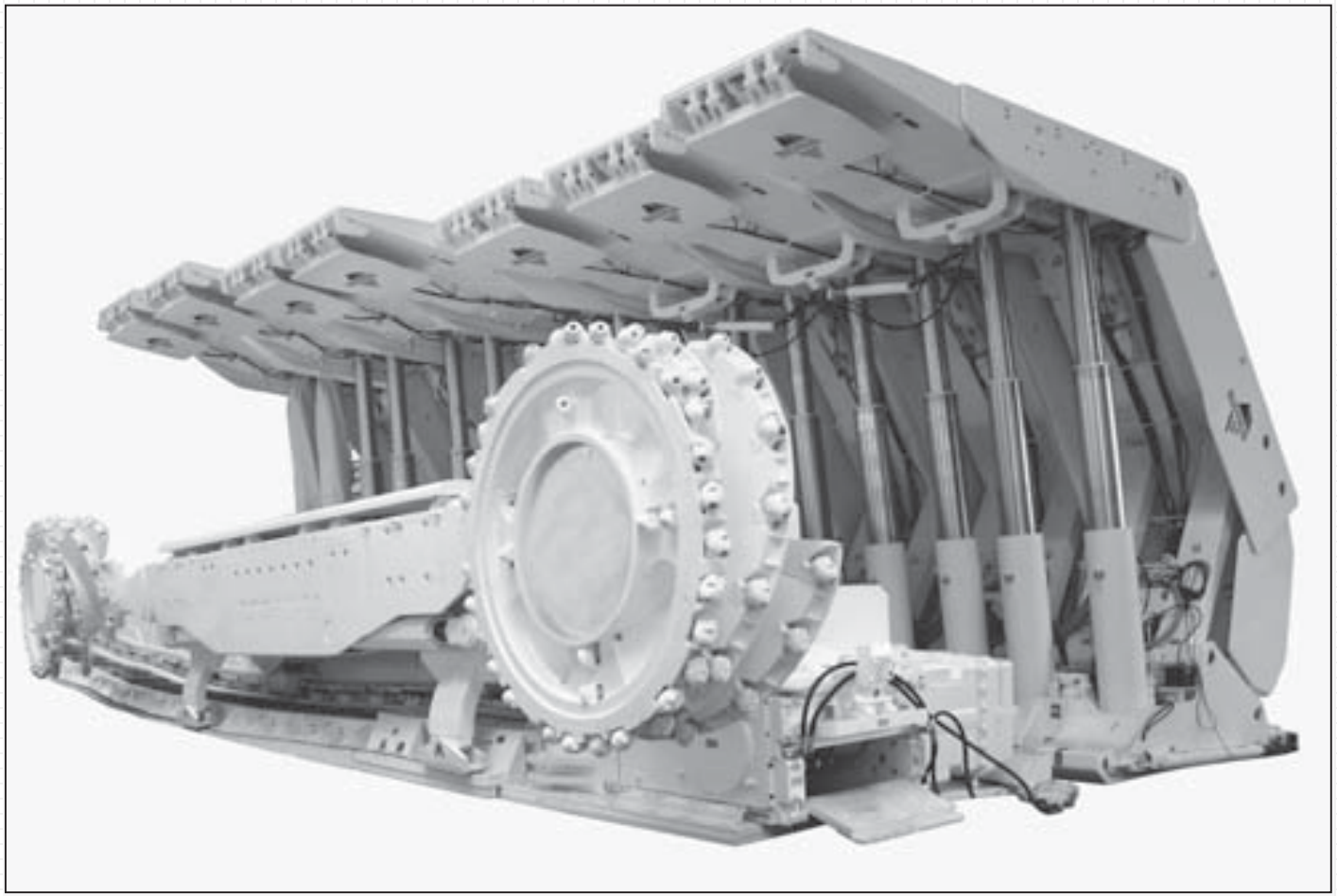

Top coal caving schematic

Immediate roof

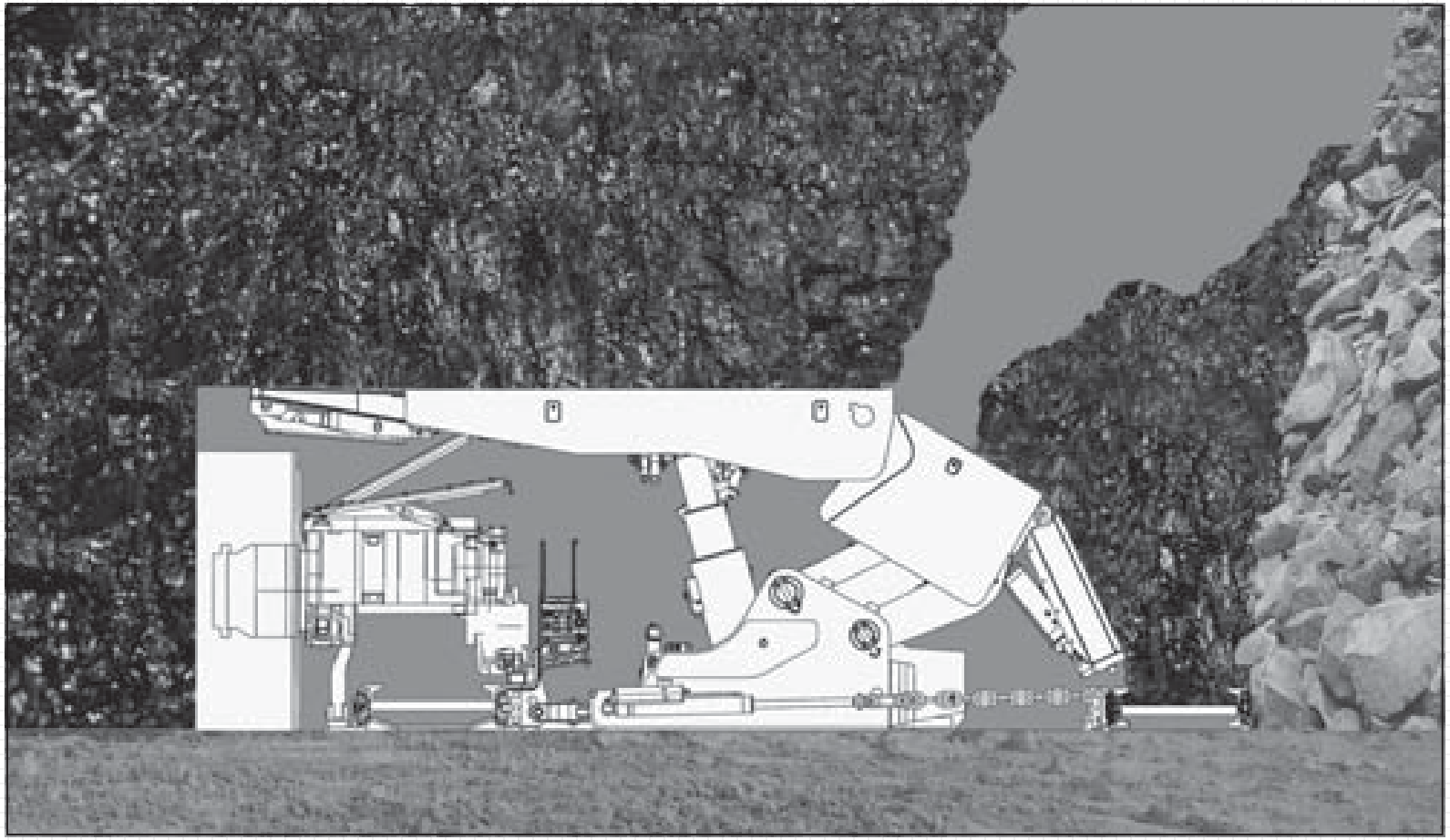

Top coal caving roof support

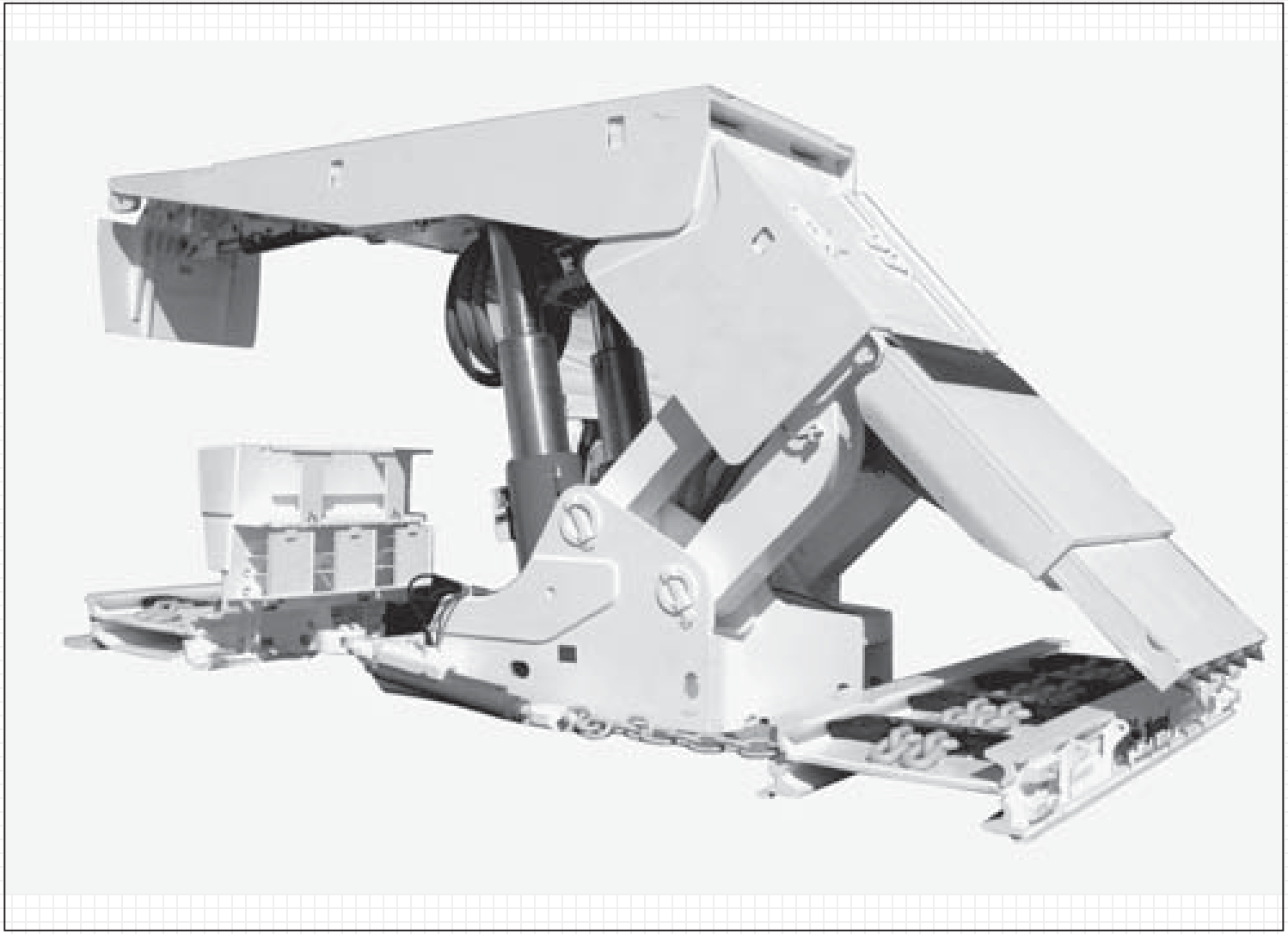

Example of a longwall system's general requirements

Parameter	Requirement
Mining method	Conventional retreat longwall
Number of maingate roadways	Two
Panel width	305-m centers
Mining extraction range	Nominal 4.5 m, minimum 3.5 m, maximum 4.8 m
Face cross grades	Flat to 1:10 downhill
Panel lengths	1500 to 4000 m (total of 16 panels)
Longwall retreat	50 km and 100 Mt over the life of the mine
System cutting process capability	Bidirectional and unidirectional sequence mandatory; half-web optional
Automation capabilities	In accordance with the capabilities expected to be supplied at the time of ordering (approximately 2010)
Extraction depth	Nominal 1,000 mm
Nameplate capacity	3500 t/h
Process cycle capacity	3000 t/h

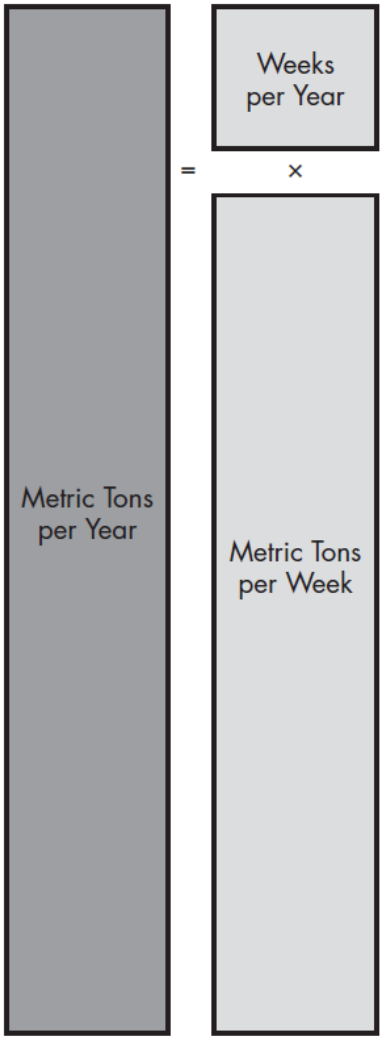
Metric Tons
per Year
=
Weeks
per Year
×
Metric Tons
per Week

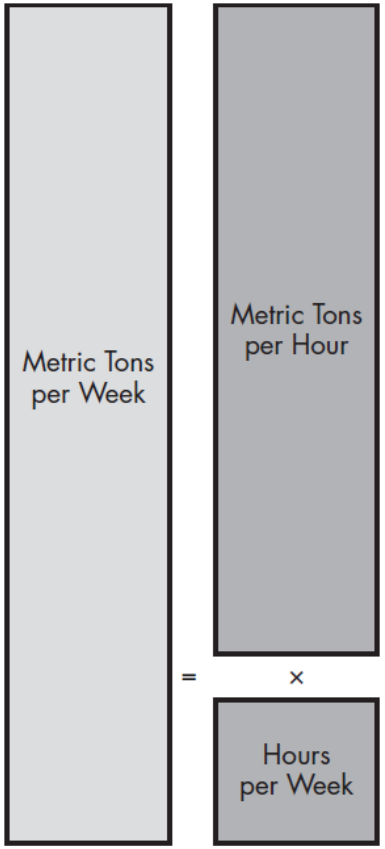
Metric Tons
per Week
=
Metric Tons
per Hour
×
Hours
per Week

Hours per Week
fn
Roster
Planned Delays
Unplanned Delays
5/6/7-Day roster
Maintenance, services retractions, meetings, travel
Equipment breakdowns, operator delays, geotechnical issues

Metric Tons per Hour	=	Process Cycle Capacity	fn	Nameplate Capacity	4,500/3,500/2,500 t/h
				Cutting Height	1.5 to 5.5 m
				Web Depth	0.8 to 1.2 m
				Panel Width	150 to 440 m
				Cutting Method	Unidirectional, bidirectional, half-web
				Equipment Configuration	Shearer speed, drum diameter
				Longwall Top Coal Caving Process	Caving sequence and duration, gate end double push
				Lower Advance Set Cycle	Shield advance rate restrictions
		×			
		Process Reduction Factor	fn	Human Factors	Motivation, leadership, sufficient labor, operator skill
				Geological Factors	Variable conditions, gas, structure, dykes, slow caving
				Equipment Factors	Underperforming equipment
				Process Factors	Fly cuts, double gate cleanups
				Unreported Delays	Minor delays, slow shearer for lumps

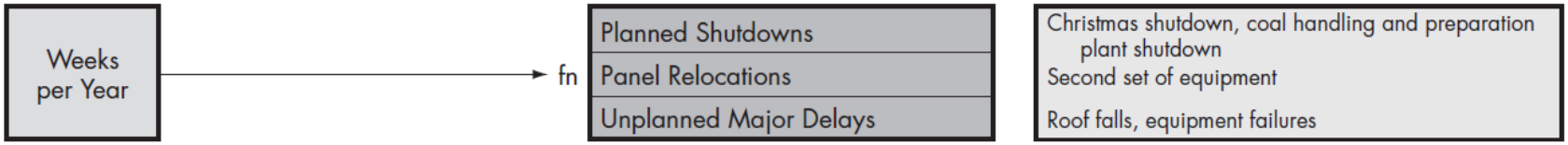
Weeks per Year
fn
Planned Shutdowns
Panel Relocations
Unplanned Major Delays
Christmas shutdown, coal handling and preparation plant shutdown
Second set of equipment
Roof falls, equipment failures

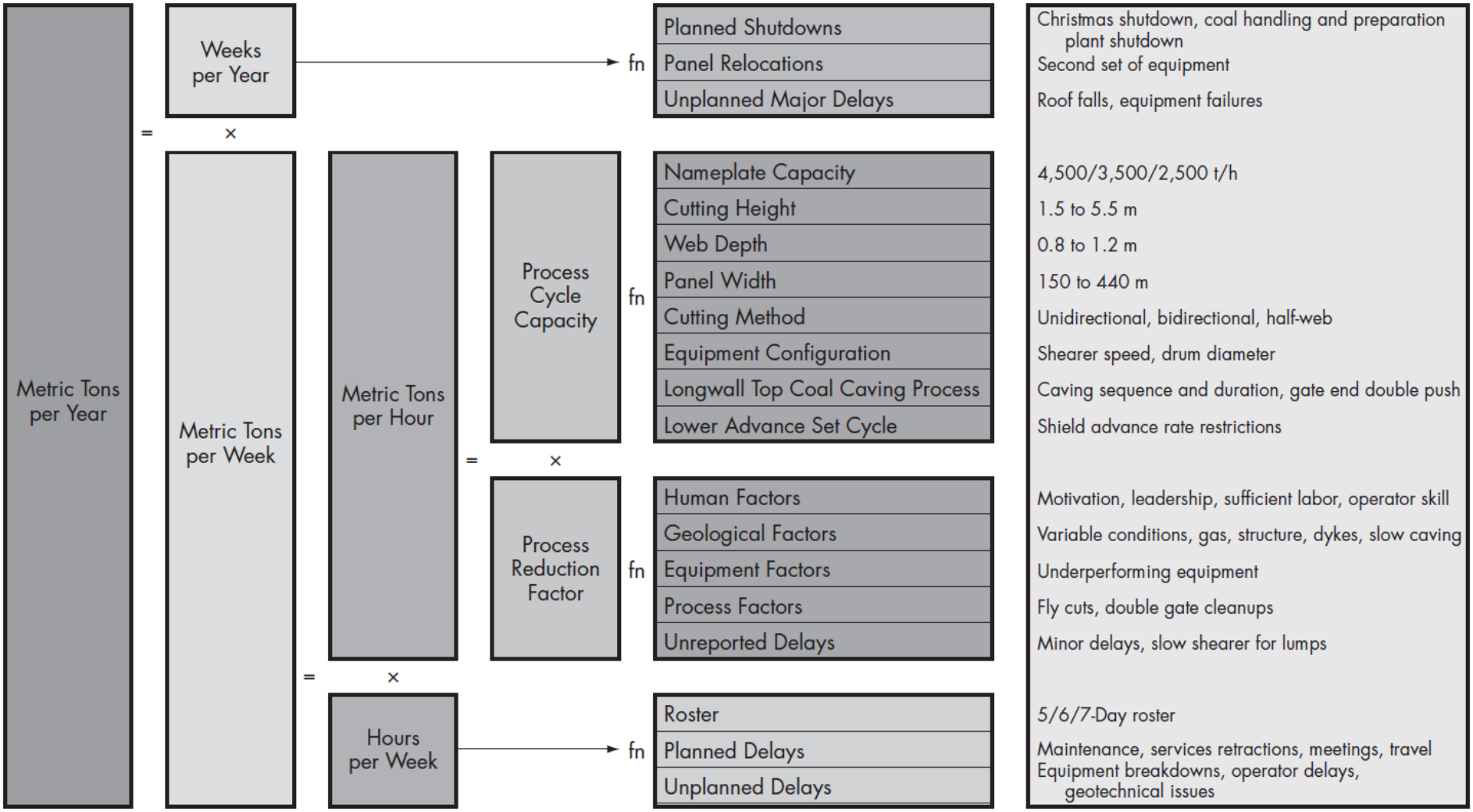
Metric Tons per Year
=
Weeks per Year
×
fn
Planned Shutdowns
Panel Relocations
Unplanned Major Delays
Christmas shutdown, coal handling and preparation plant shutdown
Second set of equipment
Roof falls, equipment failures
Metric Tons per Week
=
Metric Tons per Hour
×
Process Cycle Capacity
fn
Nameplate Capacity
Cutting Height
Web Depth
Panel Width
Cutting Method
Equipment Configuration
Longwall Top Coal Caving Process
Lower Advance Set Cycle
4,500/3,500/2,500 t/h
1.5 to 5.5 m
0.8 to 1.2 m
150 to 440 m
Unidirectional, bidirectional, half-web
Shearer speed, drum diameter
Caving sequence and duration, gate end double push
Shield advance rate restrictions
×
Process Reduction Factor
fn
Human Factors
Geological Factors
Equipment Factors
Process Factors
Unreported Delays
Motivation, leadership, sufficient labor, operator skill
Variable conditions, gas, structure, dykes, slow caving
Underperforming equipment
Fly cuts, double gate cleanups
Minor delays, slow shearer for lumps
Hours per Week
fn
Roster
Planned Delays
Unplanned Delays
5/6/7-Day roster
Maintenance, services retractions, meetings, travel
Equipment breakdowns, operator delays, geotechnical issues

Simultaneous cut-and-bolt continuous miner

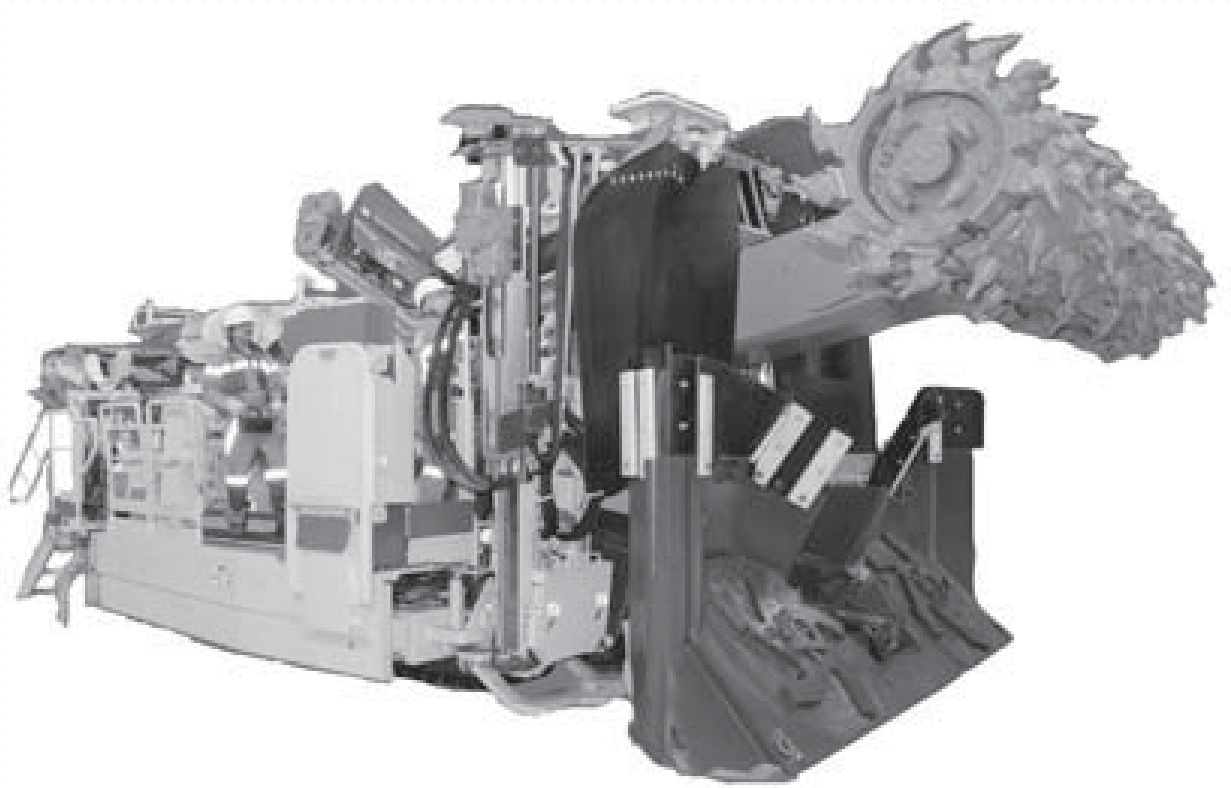

Place-change continuous miner

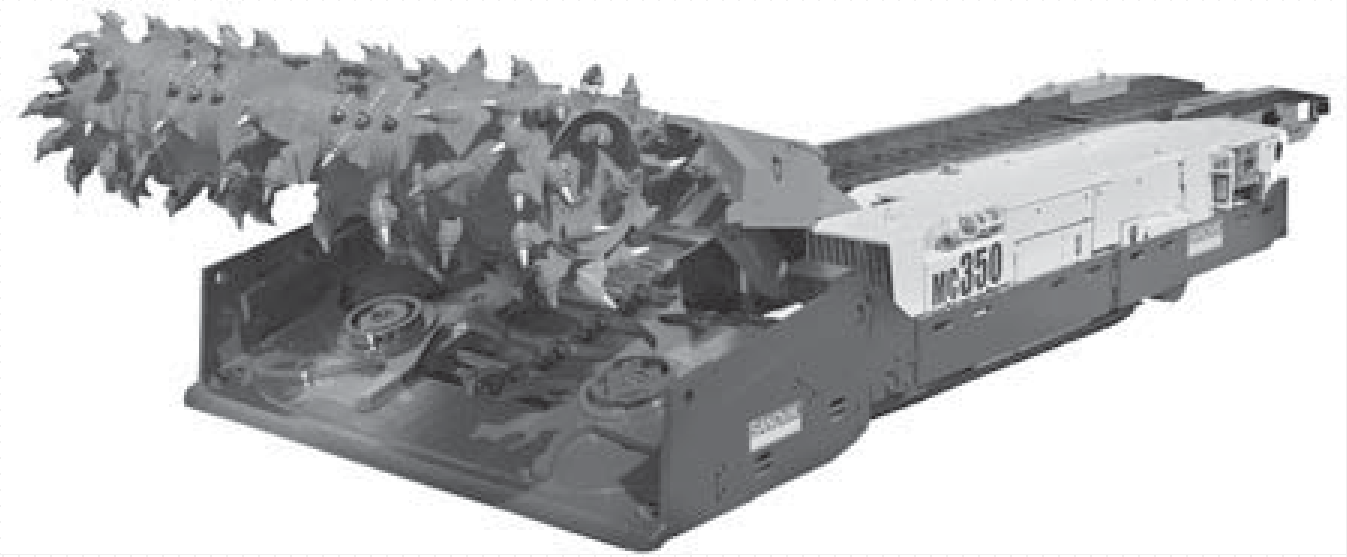

Battery ram car

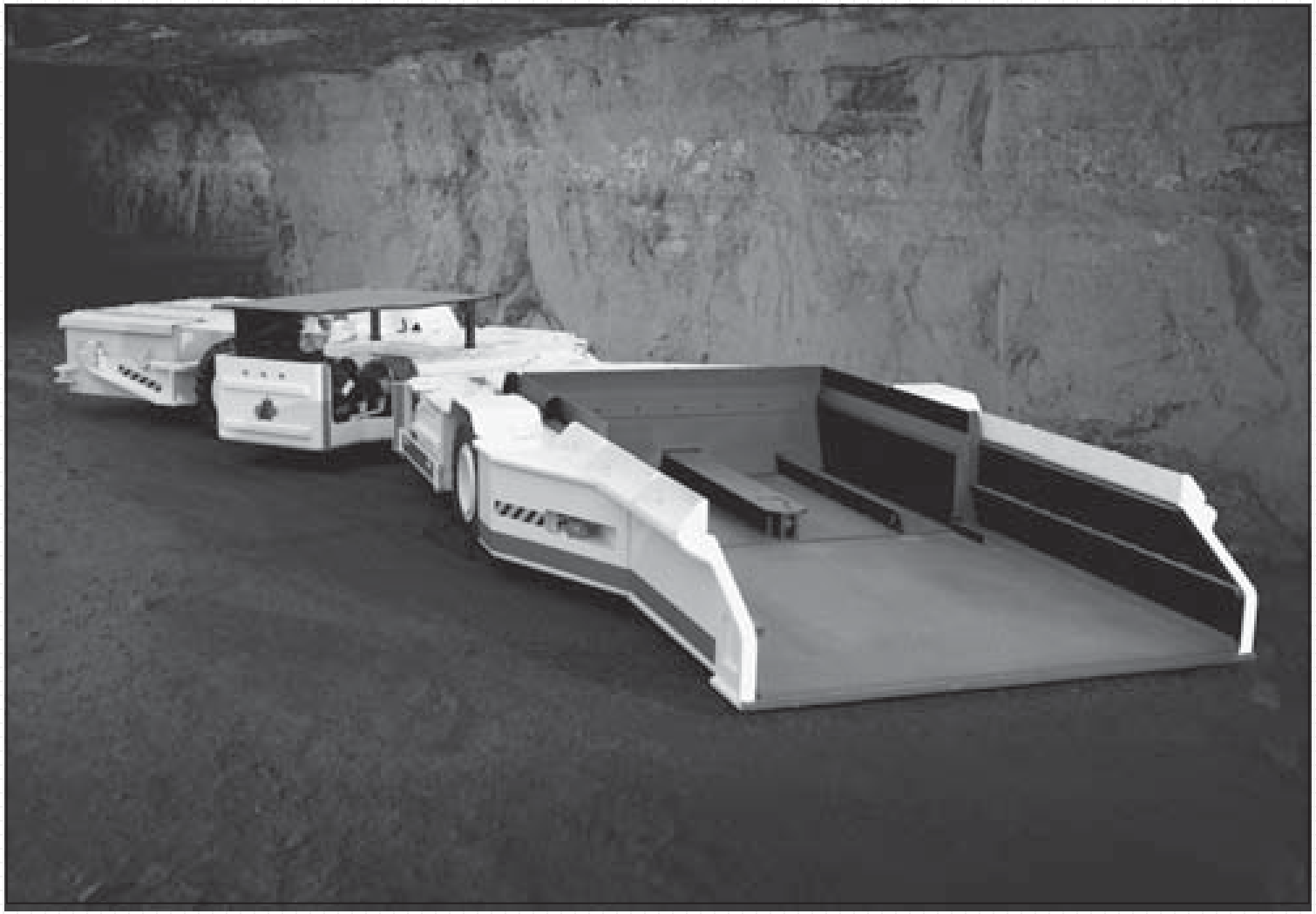

Electric shuttle car

Development system - general arrangement

Parameter	Requirement
Roadway cross section	Nominal 5.2 m wide by 3.4 m high; rectangular profile
Working grade	Up to 1 in 10 (maximum)
Quantity of development panels	One main (up to seven headings) and two gate roads (two headings)

Development equipment - general requirements

Parameter	Requirement
Continuous miner	Single-pass wide-head track mounted;one per panel; either simultaneous or sequential cut-and-bolt configuration
	Fully remote operation with manual override
	Four roof and two rib automatic-type bolters; to suit standard or long tendon bolts
	Data communications, including real-time bidirectional between equipment and mine communication system
	Onboard ventilation system
	Dust-suppression system fitted; preferably with wet head design
	Hydraulic system with capacity to suit simultaneous operation of all bolting equipment
	Onboard roof support materials storage-andhandling equipment
	Methane-detection monitors fitted
	Fitted with integrated temporary roof-and-rib support systems
Coal haulage	Electric shuttle car with trailing cable; one per panel
	Nominal 15-t capacity; with feed-out rate of 1,400 t/h
	Capable of travel speeds up to 8 km/h

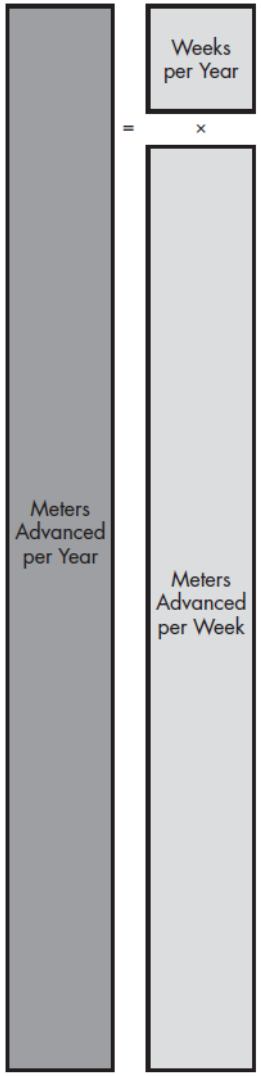
Meters Advanced per Year
=
Meters Advanced per Week
×
Weeks per Year

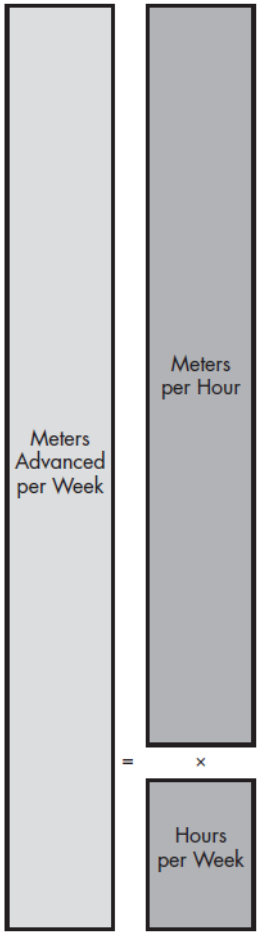
Meters
Advanced
per Week
=
Meters
per Hour
×
Hours
per Week

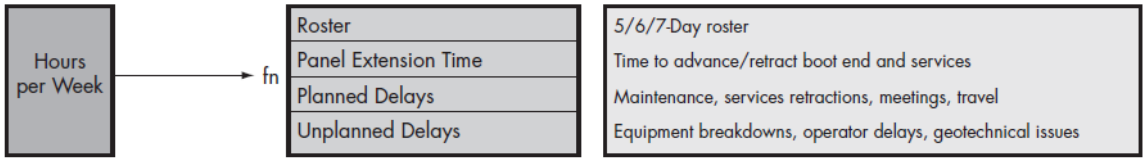
Hours per Week
fn
Roster
Panel Extension Time
Planned Delays
Unplanned Delays
5/6/7-Day roster
Time to advance/retract boot end and services
Maintenance, services retractions, meetings, travel
Equipment breakdowns, operator delays, geotechnical issues

Meters per Hour	=	Process Advance Rate	fn	Nameplate Advance Rate
				Panel Configuration
				Primary Bolting Density
				Primary Bolting Configuration
				Shuttle Car Capacity
				Shuttle Car Speed
				Shuttle Car Discharge Rate
				Equipment Configuration
				Roadway Dimensions
				Mining Method
				Face Ventilation
				Feeder/Boot
				Coal Clearance Method
	×	Process Reduction Factor	fn	Human Factors
				Geological Factors
				Mining Conditions
				Floor Conditions
				Equipment Factors
				Process Factors
				Unreported Delays

One car cycle (cut, load, tram, discharge, return)	
Number of headings, pillar width, location of conveyor	
4, 6, 8 roof bolts/m, 2, 4, 6 rib bolts/m, long tendons	
Spot bolts, straps, mesh, bolt length	
Between 7 t and 18 t	
Between 4 and 8 km/h	
Time to discharge full load into feeder/boot	
Cutterhead width, number of bolting rigs, etc.	
Width and height	
In-place, place-change, cut depth before bolting	
Frequency and time to add ducting	
Use of breaker feeder or boot end, capacity of hopper	
Continuous haulage, shuttle cars, ram cars	
Motivation, leadership, sufficent labor, operator skill	
Variable conditions, gas, structure, rolls, dykes	
Gas, dust ventilation	
Weak, wet, slippery floor	
Underperforming equipment	
Slow bolting, reposition equipment	
Minor delays, wait for equipment	

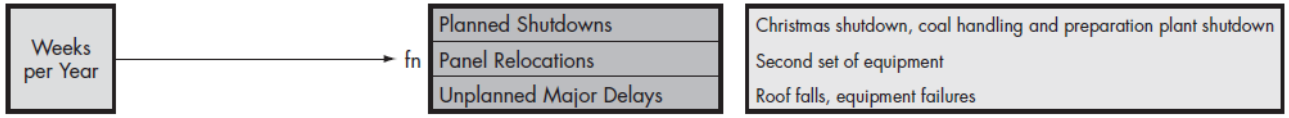
Weeks per Year
fn
Planned Shutdowns
Panel Relocations
Unplanned Major Delays
Christmas shutdown, coal handling and preparation plant shutdown
Second set of equipment
Roof falls, equipment failures

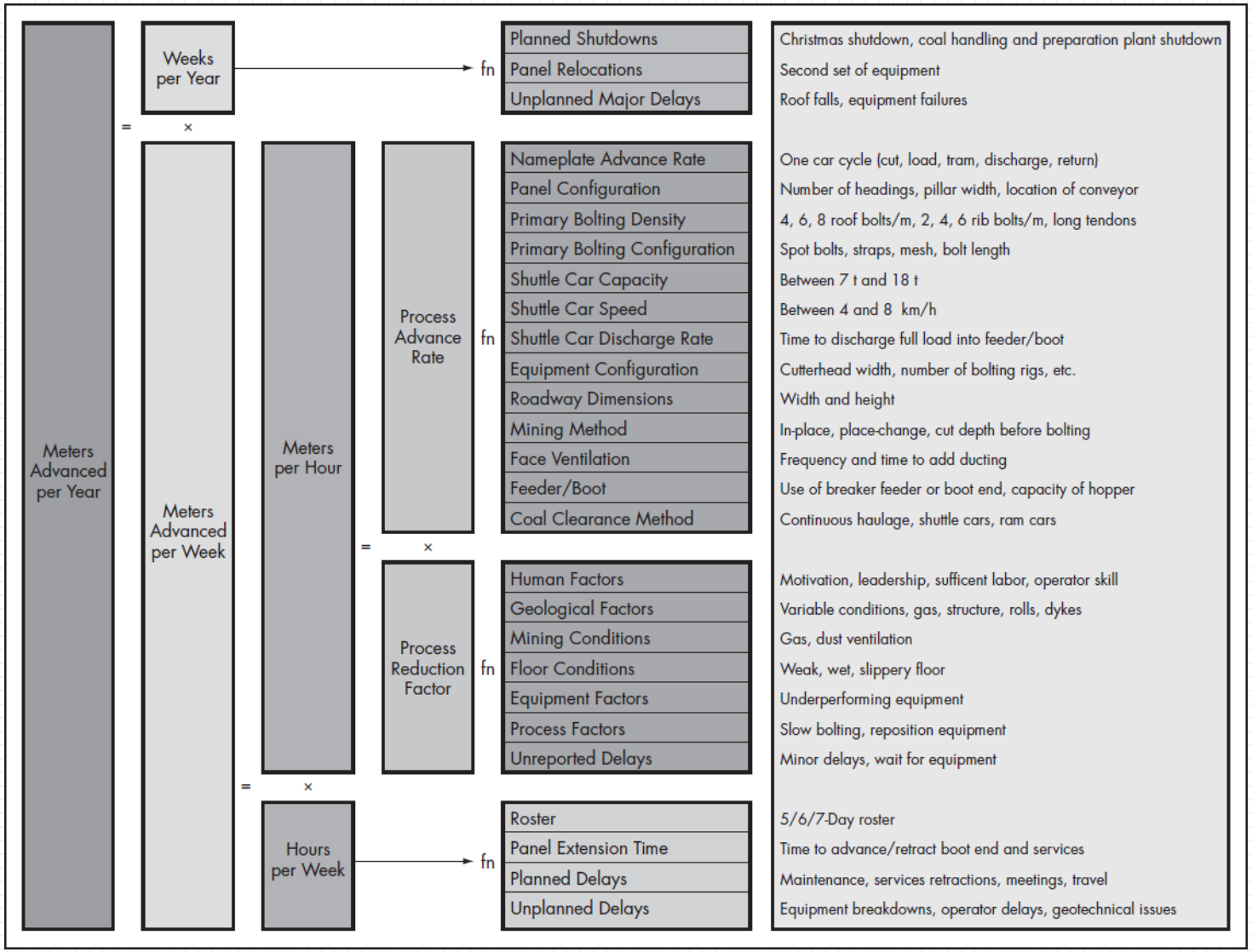
Meters Advanced per Year
=
Weeks per Year
×
fn
Planned Shutdowns
Panel Relocations
Unplanned Major Delays
Christmas shutdown, coal handling and preparation plant shutdown
Second set of equipment
Roof falls, equipment failures
Meters Advanced per Week
=
Meters per Hour
×
Process Advance Rate
fn
Nameplate Advance Rate
Panel Configuration
Primary Bolting Density
Primary Bolting Configuration
Shuttle Car Capacity
Shuttle Car Speed
Shuttle Car Discharge Rate
Equipment Configuration
Roadway Dimensions
Mining Method
Face Ventilation
Feeder/Boot
Coal Clearance Method
One car cycle (cut, load, tram, discharge, return)
Number of headings, pillar width, location of conveyor
4, 6, 8 roof bolts/m, 2, 4, 6 rib bolts/m, long tendons
Spot bolts, straps, mesh, bolt length
Between 7 t and 18 t
Between 4 and 8 km/h
Time to discharge full load into feeder/boot
Cutterhead width, number of bolting rigs, etc.
Width and height
In-place, place-change, cut depth before bolting
Frequency and time to add ducting
Use of breaker feeder or boot end, capacity of hopper
Continuous haulage, shuttle cars, ram cars
Process Reduction Factor
fn
Human Factors
Geological Factors
Mining Conditions
Floor Conditions
Equipment Factors
Process Factors
Unreported Delays
Motivation, leadership, sufficent labor, operator skill
Variable conditions, gas, structure, rolls, dykes
Gas, dust ventilation
Weak, wet, slippery floor
Underperforming equipment
Slow bolting, reposition equipment
Minor delays, wait for equipment
=
Hours per Week
fn
Roster
Panel Extension Time
Planned Delays
Unplanned Delays
5/6/7-Day roster
Time to advance/retract boot end and services
Maintenance, services retractions, meetings, travel
Equipment breakdowns, operator delays, geotechnical issues