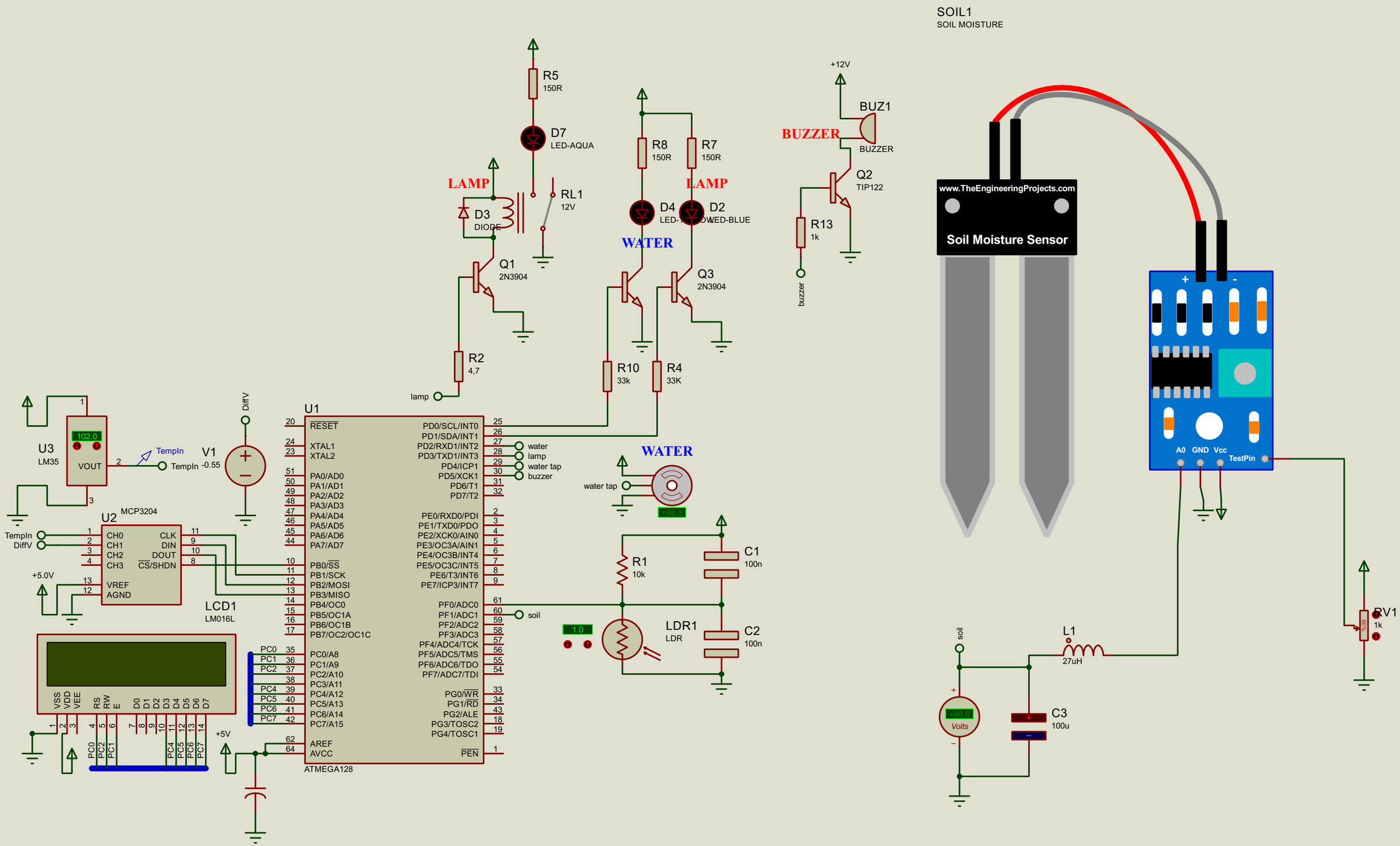
SOIL1
SOIL MOISTURE
R5
150R
D7
LED-AQUA
LAMP
D3
DIODE
RL1
12V
Q1
2N3904
R2
4,7
lamp
R8
150R
R7
150R
LAMP
D4
D2
WATER
Q3
2N3904
R10
33k
R4
33K
+12V
BUZ1
BUZZER
BUZZER
Q2
TIP122
R13
1k
buzzer
www.TheEngineeringProjects.com
Soil Moisture Sensor
A0 GND Vcc
TestPin
U3
LM35
VOUT
TempIn
V1
-0.55
DiffV
U1
ATMEGA128
RESET
XTAL1
XTAL2
PA0/AD0
PA1/AD1
PA2/AD2
PA3/AD3
PA4/AD4
PA5/AD5
PA6/AD6
PA7/AD7
PB0/SS
PB1/SCK
PB2/MOSI
PB3/MISO
PB4/OC0
PB5/OC1A
PB6/OC1B
PB7/OC2/OC1C
PC0/A8
PC1/A9
PC2/A10
PC3/A11
PC4/A12
PC5/A13
PC6/A14
PC7/A15
AREF
AVCC
PD0/SCL/INT0
PD1/SDA/INT1
PD2/RXD1/INT2
PD3/TXD1/INT3
PD4/ICP1
PD5/XCK1
PD6/T1
PD7/T2
PE0/RXD0/PDI
PE1/TXD0/PDO
PE2/XCK0/AIN0
PE3/OC3A/AIN1
PE4/OC3B/INT4
PE5/OC3C/INT5
PE6/T3/INT6
PE7/ICP3/INT7
PF0/ADC0
PF1/ADC1
PF2/ADC2
PF3/ADC3
PF4/ADC4/TCK
PF5/ADC5/TMS
PF6/ADC6/TDO
PF7/ADC7/TDI
PG0/WR
PG1/RD
PG2/ALE
PG3/TOSC2
PG4/TOSC1
PEN
water
lamp
water tap
buzzer
soil
WATER
water tap
R1
10k
C1
100n
C2
100n
LDR1
LDR
U2
MCP3204
CH0
CH1
CH2
CH3
VREF
AGND
CLK
DIN
DOUT
CS/SHDN
TempIn
DiffV
+5.0V
LCD1
LM016L
VSS
VDD
VEE
RS
RW
E
D0
D1
D2
D3
D4
D5
D6
D7
PC0
PC1
PC2
PC4
PC5
PC6
PC7
+5V
soil
L1
27uH
C3
100u
Volts
RV1
1k