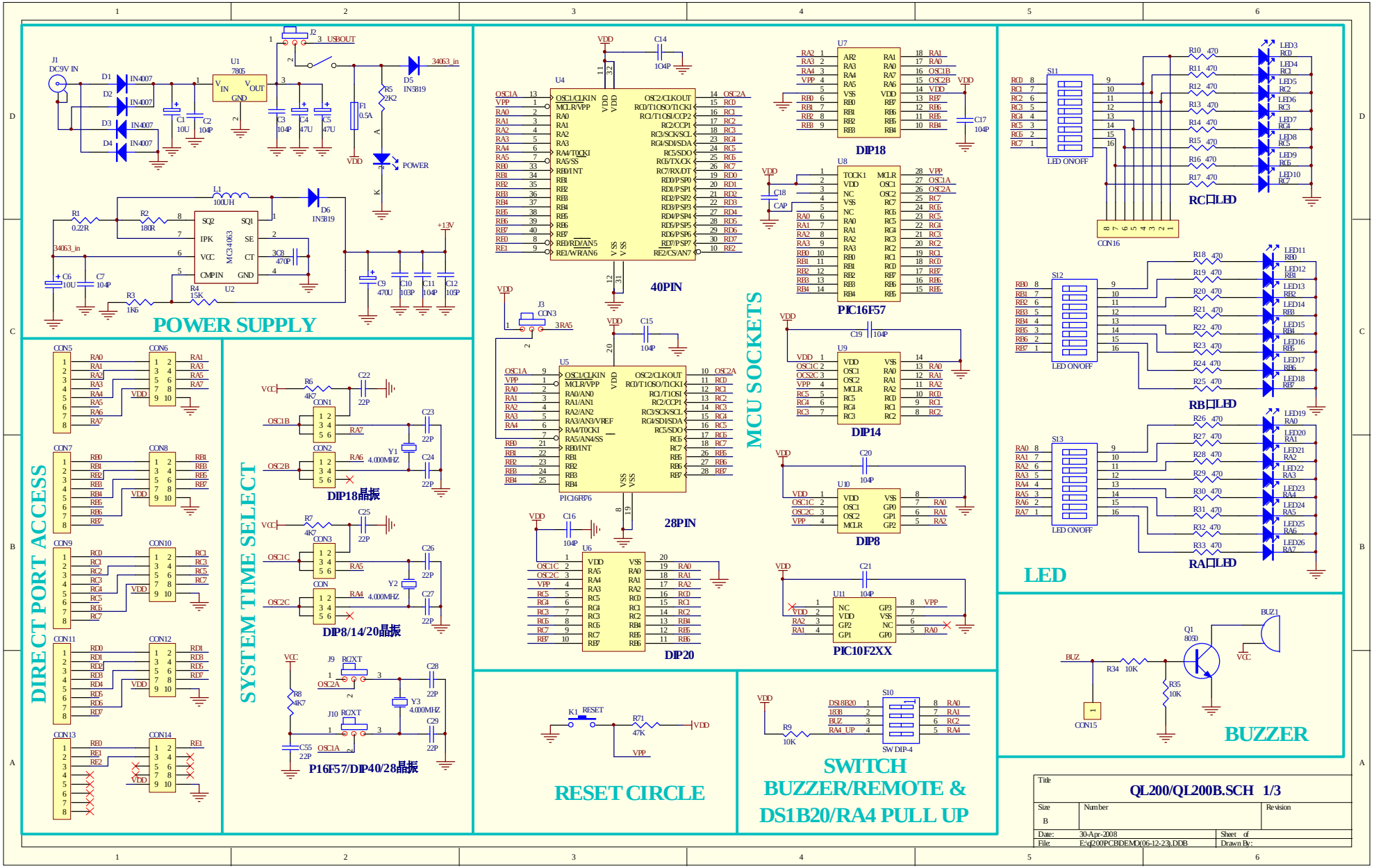
POWER SUPPLY
DIRECT PORT ACCESS
SYSTEM TIME SELECT
MCU SOCKETS
40PIN
28PIN
DIP20
DIP18
PIC16F57
DIP14
DIP8
PIC10F2XX
DIP18晶振
DIP8/14/20晶振
P16F57/DIP40/28晶振
RESET CIRCLE
SWITCH
BUZZER/REMOTE &
DS1B20/RA4 PULL UP
LED
RC口LED
RB口LED
RA口LED
BUZZER
Title
QL200/QL200B.SCH 1/3
Size
B
Number
Revision
Date: 30-Apr-2008
Sheet of
File: E:\ql200PCB\DEMO(06-12-23).DDB
Drawn By:

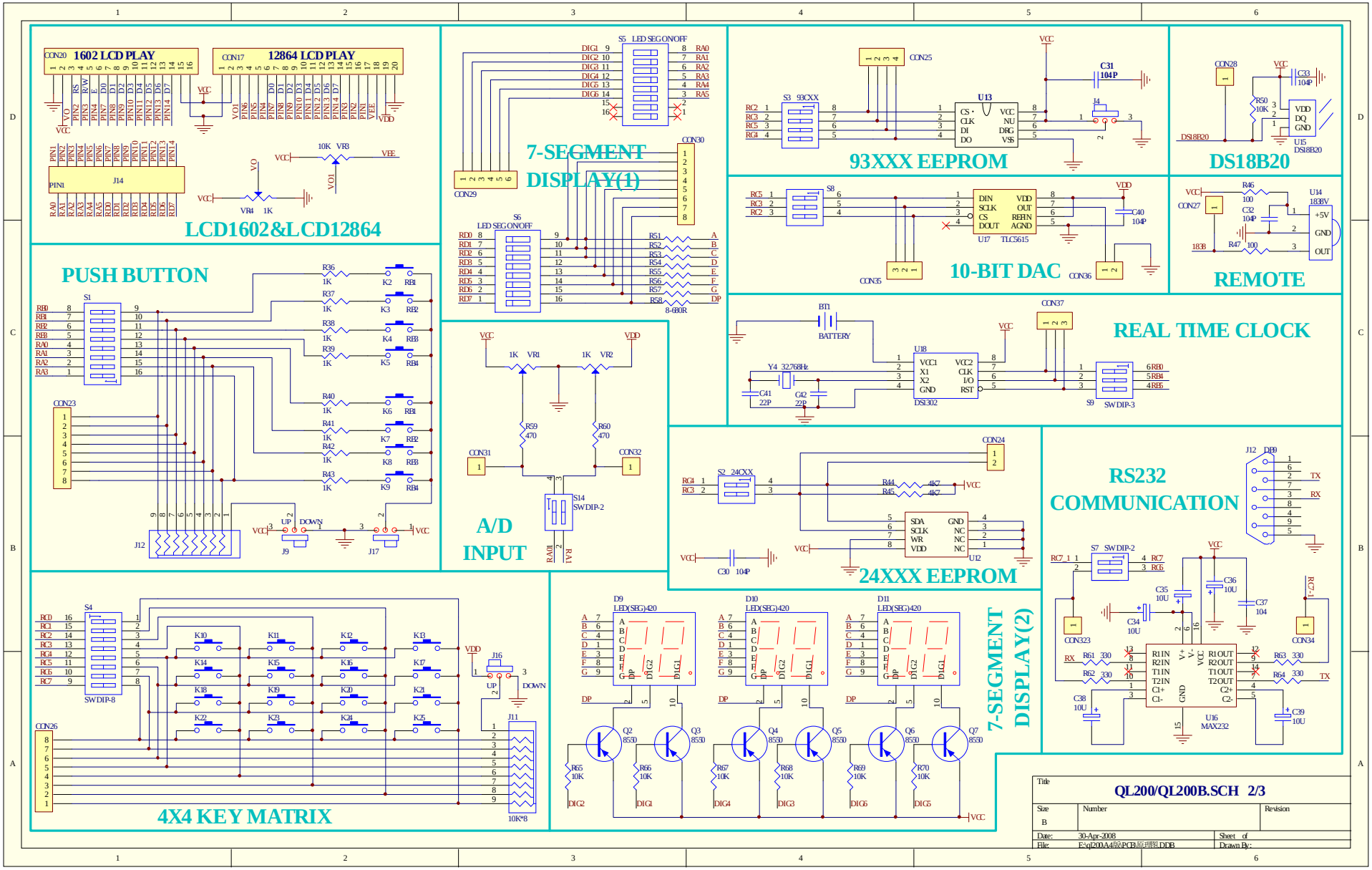
LCD1602&LCD12864
1602 LCD PLAY
12864 LCD PLAY
PUSH BUTTON
7-SEGMENT DISPLAY(1)
93XXX EEPROM
DS18B20
10-BIT DAC
REMOTE
REAL TIME CLOCK
A/D INPUT
24XXX EEPROM
RS232 COMMUNICATION
7-SEGMENT DISPLAY(2)
4X4 KEY MATRIX
QL200/QL200B.SCH 2/3
Date: 30-Apr-2008
Sheet of
Drawn By:

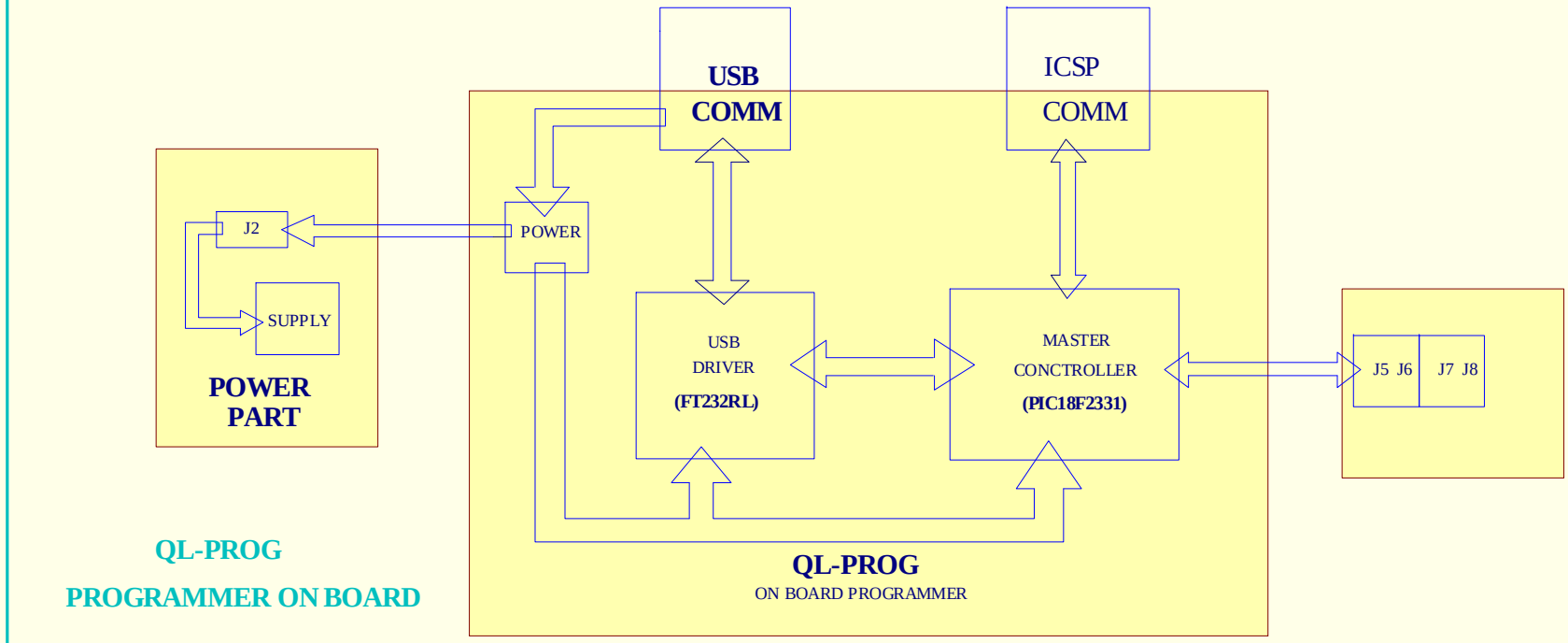

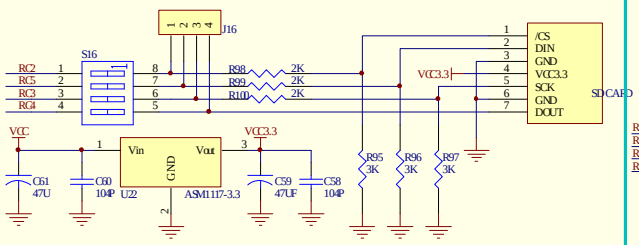

MMC/SD CARD READER

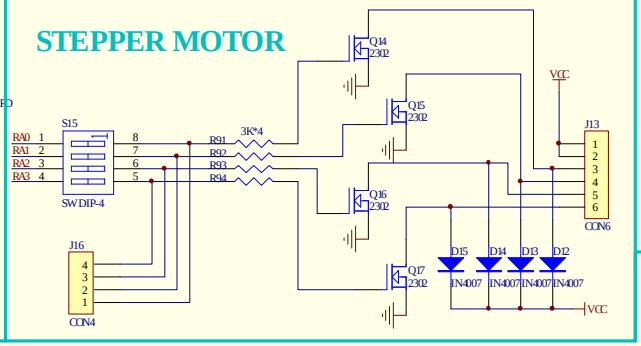

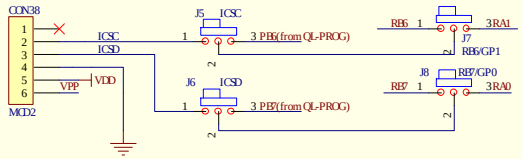

Title	QL200/QL200B.SCH 3/3	
Size B	Number	Revision
Date: 30-Apr-2008		Sheet of
File: E:\ql200PCB\DEMO(06-12-23).DDB		Drawn By: