IC Packaging Techniques:

i) Flat Pack
ii) Metal Can Package
iii) Dual in line

Open Loop OP-AMP:

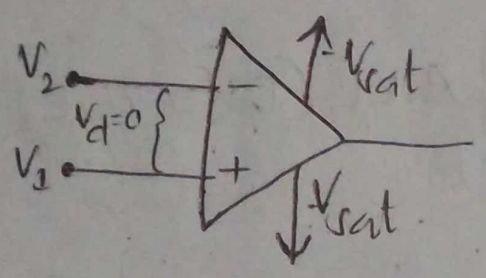

$V_1 = 0$ non-inv i/p $= 0 \Rightarrow V_0 = 180°$ out of phase of i/p

$V_2 = 0$ inv i/p $= 0 \Rightarrow V_0 = V_{in}$ inphase of i/p

An OP-Amp is said to be Openloop, if
i) Input Impedence $(R_i) = \infty$
ii) Gain is Infinite $(A_{OL} = \infty)$
iii) Bandwidth is infinite $(BW = \infty)$
iv) Output Impedence $= 0$ $(R_o = 0)$
v) Zero offset nulls
vi) CMRR $= \infty$

explanation:
i) OP-Amp doesn't draw current from the input terminals.

ii) As Gain is infinite, $A = \frac{V_o}{V_d} = \infty$

$$V_d = V_1 - V_2 = 0$$

* Maximum output value of an OP-AMP is ± power voltage

Range :- V_{sat} to V_{sat}

Feedback in Amplifiers:

To improve stability of op-amp, we give negative feedback.

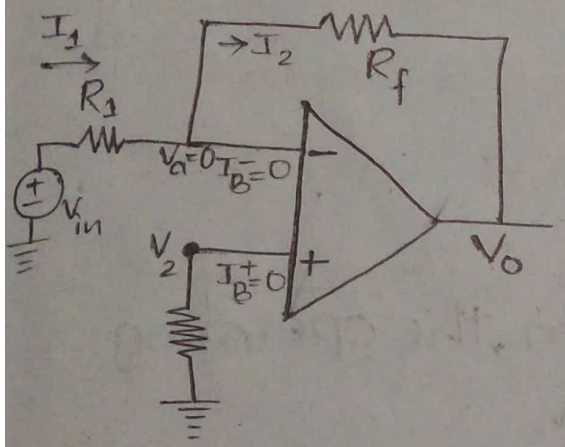

If input is given to inverting terminal, non-inverting terminal = 0
$\Rightarrow V_d = 0 \Rightarrow V_a = 0$
$\Rightarrow$ This is called Virtual Ground.

Based on Ideal Characteristics of OP-AMP

$$V_d = V_a - V_2$$

$$V_d = V_a - 0 \Rightarrow \boxed{V_a = 0} \qquad [\because V_d = 0]$$

Apply KCL at V_a,

$$I_1 = I_B + I_2$$

$$\frac{V_{in} - V_a}{R_1} = 0 + \frac{V_a - V_o}{R_f}$$

$$\frac{V_{in} - 0}{R_1} = \frac{0 - V_o}{R_f}$$

$$V_o = -\frac{R_f}{R_1} \times V_{in} \Rightarrow \boxed{A_{CL} = \frac{V_o}{V_{in}} = -\frac{R_f}{R_1}}$$

Q: Design an OP-AMP which is operated at ±12V. The input impedence of the OP-AMP is 5KΩ. The feedback resistors (R_f) is connected to 50 KΩ. The 2V sine wave signal is connected as input.

Solu: $R_f = 50K\Omega$

$R_1 = 5K\Omega$

$V_{in} = 2 \sin w_0 t$

$$A_{CL} = \frac{-R_f}{R_1} = \frac{-50K}{5K} = -10$$

$$V_o = -\frac{R_f}{R_i} \times V_{in}$$

$$= -10 \times 2$$

$$V_o = -20$$

But, according to the question, the operating voltage of an op-amp is −12V.

Non-Inverting Amplifier:

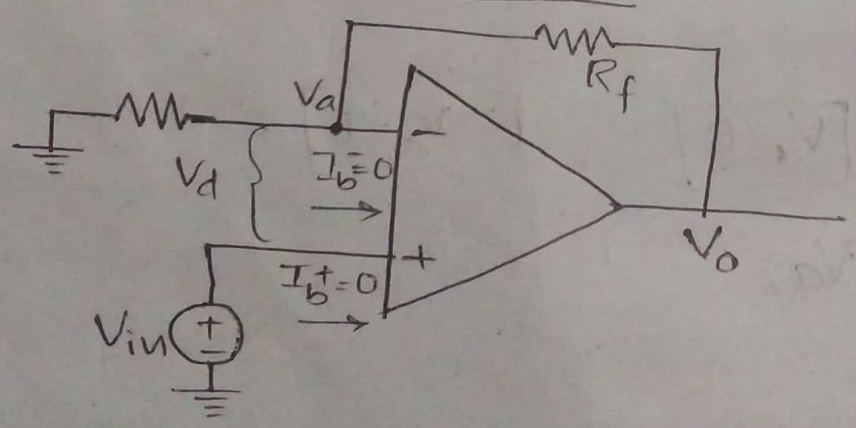

$V_d = V_2 - V_a$

$0 = V_{in} - V_a$

$$\boxed{V_{in} = V_a}$$

$$I_1 = I_B + I_2$$

$$\frac{0 - V_{in}}{R_1} = 0 + \frac{V_{in} - V_o}{R_f}$$

$$\frac{V_o}{R_f} = \frac{V_{in}}{R_f} + \frac{V_{in}}{R_1}$$

$$\boxed{V_o = V_{in}\left(1 + \frac{R_f}{R_1}\right)}$$

$$\boxed{A_{CL} = \left|\frac{V_o}{V_{in}}\right| = \left(1 + \frac{R_f}{R_1}\right)}$$

→ Here, Input is connected to the Non-investing terminal, so it is called as Non-Investing Amplifier

→ We got positive output, it indicates that the input is connected to non-investing (+) terminal.

* If the feedback resistor is very less (in value) or input resistance is very high or infinity, then that particular circuit is called as Voltage follower circuit.

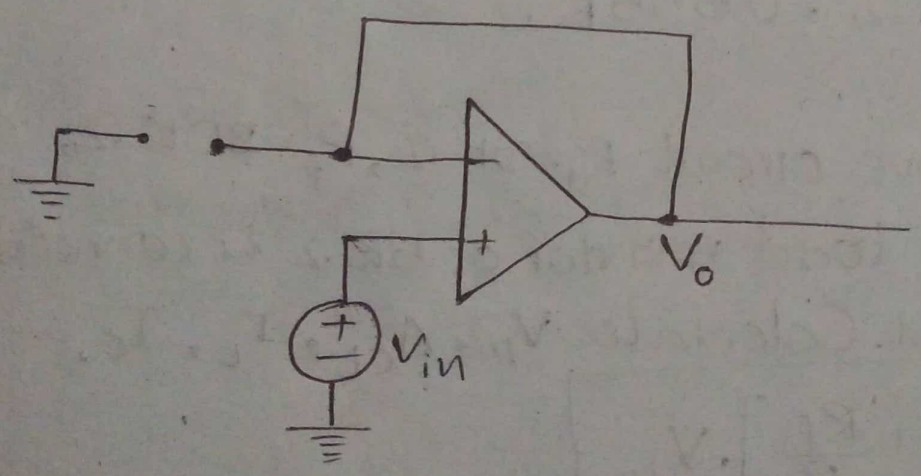

1Q: Design a circuit with a gain of 10 and R_f is $5K\Omega$

Solu: Here, the gain is positive, that indicates the circuit is non-inverting amplifier.

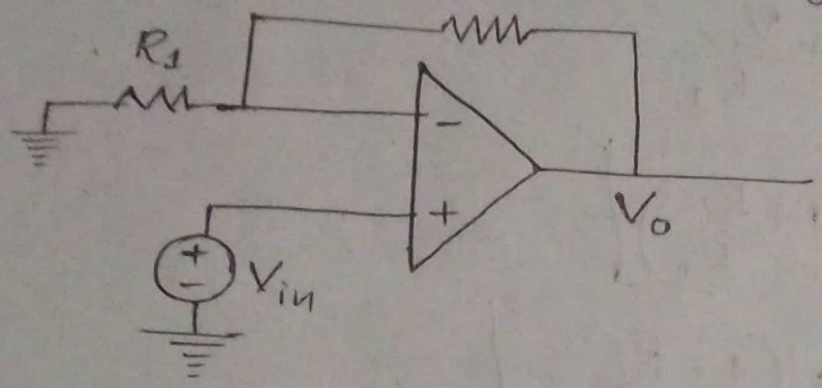

$$A_{CL} = \left(1 + \frac{R_f}{R_1}\right)$$

$A_{CL} = 10$

$R_f = 5K\Omega$

$$10 = \left[1 + \frac{5K}{R_1}\right]$$

$$10 = \left[\frac{R_1 + 5K}{R_1}\right]$$

$9R_1 = 5K$

$R_1 = 555\,\Omega = 0.555K\Omega$

2Q: In the above circuit $R_1 = 5K\Omega$, $R_f = 20K\Omega$, $V_{in} = 1$ volt, a load resistor of $5K\Omega$ is connected at the output. Calculate V_o, A_{CL}, I_L, I_o.

Solu:

$$\boxed{V_a = \left[1 + \frac{R_f}{R_1}\right] \cdot V_{in}}$$

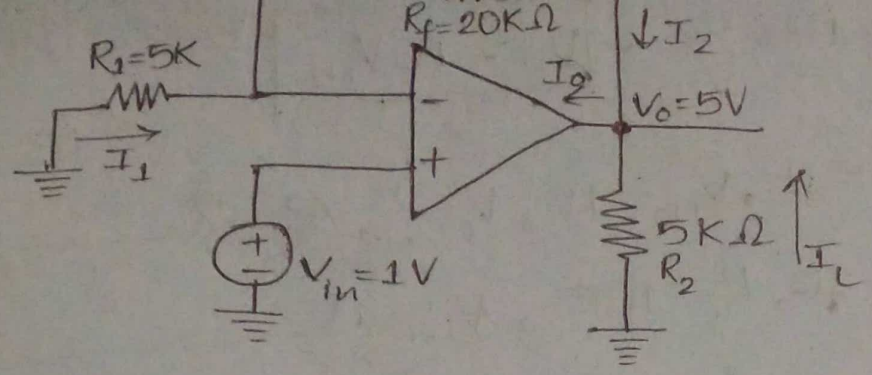

(i) $V_o = \left[1 + \frac{R_f}{R_1}\right] \times V_{in}$

$= \left[1 + \frac{\cancel{20K}^{\,4}}{\cancel{5K}}\right] \cdot 1$

$V_o = 5V$

(ii) $A_{CL} = 1 + \frac{R_f}{R_1} = \left[1 + \frac{20K}{5K}\right] = 5$

(iii) $I_L = \frac{V_o}{R_L} = \frac{5}{5K} = 1\,mA$

(iv) $I_o = I_2 + I_L$

$= \frac{1}{5K} + 1\,mA$

$= 0.2\,mA + 1\,mA$

$= 1.2\,mA$

3Q: $A_{OL} = -10$, $R_i = 10K\Omega$, $V_o = ?$

Soln: Given $\Rightarrow A_{OL} = -10$ (Investing)

i/p resistance $= 10\,K\Omega$

$A_{OL} = -\frac{R_f}{R_1}$

$-10 = -\frac{10\,R_f}{10K} \Rightarrow R_f = 100\,K\Omega$

$$A_{OL} = \frac{V_o}{V_{in}} \Rightarrow -10 = \frac{V_o}{V_{in}} \Rightarrow \boxed{V_o = -10 V_{in}}$$

AQ: $A_{OL} = -30$, $R_i = 10K\Omega$, $V_{in} = 1V$, $V_o = ?$, $R_f = ?$

Soln: Given $\Rightarrow$ $A_{OL} = -30$, $R_i = 10K$, $V_{in} = 1V$

$$\frac{V_o}{V_{in}} = \frac{-R_f}{R_{in}} = A_{OL} \Rightarrow \cancel{-}30 = \frac{\cancel{-}R_f}{R_{in}=10K} \Rightarrow R_f = 300K\Omega$$

$$A_{OL} = \frac{V_o}{V_{in}} = \frac{-R_f}{R_{in}} \Rightarrow V_o = \frac{-R_f}{R_{in}} \times V_{in} \Rightarrow V_o = \frac{-30\cancel{0}}{1\cancel{0}} \times 1$$

$$\boxed{V_o = -30V}$$

Differential Amplifier: (Difference Amplifier, Subtractor)

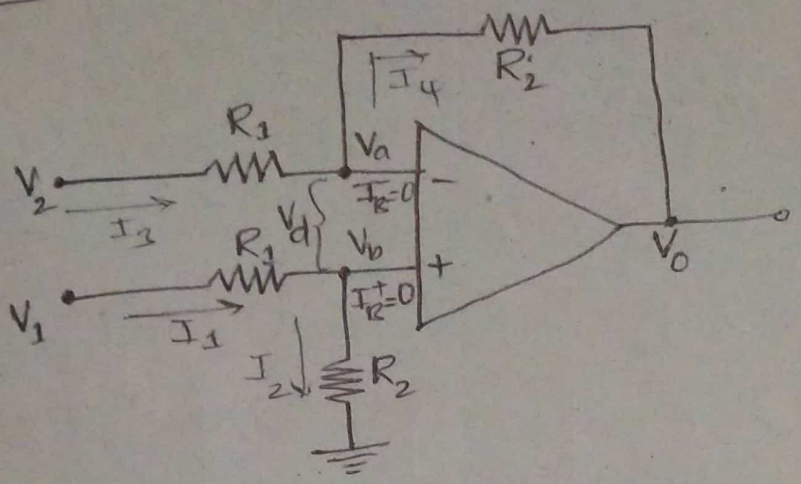

→ $R_i = \infty$

→ Gain $= \infty$

$$\frac{V_o}{V_d} = \infty$$

$\Rightarrow V_d = 0$

$V_a - V_b = 0$

$$\boxed{V_a = V_b} \text{ — (1)}$$

$$I_1 = I_2 + I_B^+$$

$$\frac{V_1 - V_b}{R_1} = \frac{V_b - 0}{R_2} + 0$$

$$\frac{V_1}{R_1} = V_b\left(\frac{1}{R_1} + \frac{1}{R_2}\right) \text{ — (2)}$$

$$I_3 = I_4 + I_B^-$$

$$\frac{V_2 - V_a}{R_1} = \frac{V_a - V_o}{R_2} + 0$$

$$\frac{V_2}{R_1} + \frac{V_o}{R_2} = V_a\left(\frac{1}{R_1} + \frac{1}{R_2}\right) \text{ — (3)}$$

Substitute (2) in (3)

$$\frac{V_2}{R_1} + \frac{V_o}{R_2} = V_b\left(\frac{1}{R_1} + \frac{1}{R_2}\right) \text{ — (4)}$$

Equate (3) & (4)

$$\frac{V_2}{R_1} + \frac{V_o}{R_2} = \frac{V_1}{R_1} \Rightarrow \frac{V_o}{R_2} = \frac{V_1 - V_2}{R_1}$$

$$\Rightarrow V_o = \frac{R_2}{R_1}(V_1 - V_2)$$

If $R_2 = R_1$, then $\boxed{V_o = V_1 - V_2}$

→ If inputs are in common mode i.e., $V_1 = V_2$, then

$$\boxed{V_0 = 0}$$

$V_1 = V_2 \Rightarrow V_0 = 0$

$$V_{CM} = \frac{V_1 + V_2}{2} \quad \text{—— (1)};$$

$$V_d = V_1 - V_2 \quad \text{—— (2)}$$

$$2V_{CM} = V_1 + V_2$$
$$V_d = V_1 - V_2$$
$$2V_{CM} + V_d = 2V_1$$

$$V_1 = V_{CM} + \frac{1}{2}V_d \quad \text{—— (4)}$$

$$V_2 = V_1 - V_d$$
$$V_2 = V_{CM} + \frac{1}{2}V_d - V_d$$
$$V_2 = V_{CM} - \frac{1}{2}V_d \quad \text{—— (5)}$$

$$V_0 = A V_{in}$$
$$V_0 = A V_1 + A_2 V_2 \quad \text{—— (3)}$$

Substitute (4) & (5) in (3)

$$V_0 = A_1\left(V_{CM} + \frac{1}{2}V_d\right) + A_2\left(V_{CM} - \frac{V_d}{2}\right)$$

$$V_0 = V_{CM}(A1 + A2) + V_d\left(\frac{A_1 - A_2}{2}\right)$$

$$A_1 + A_2 = A_{CM}, \quad \left(\frac{A1 - A_2}{2}\right) = A_{DM}$$

$$\boxed{V_0 = A_{CM}V_{CM} + A_{DM}V_{DM}}$$

<u>CMRR:</u>

$$\rho = \left|\frac{A_{DM}}{A_{CM}}\right| \quad \text{as } A_{CM} = 0$$

$\rho = \infty$ for Ideal OP-AMP

DC Characteristics:

(i) Input Bias Current

(ii) Input Offset Current

(iii) Input Offset Voltage

(iv) Total Output Voltage

(v) Thermal Drift

(i) Input Bias Current:

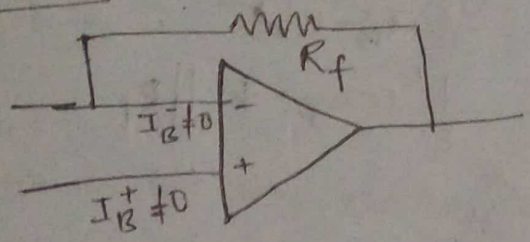

$I_B^- \neq 0$, $I_B^+ \neq 0$, due to internal imbalances b/w input terminals.

$$I_1 = I_2 + I_B^-$$

$$\frac{V_{in} - V_a}{R_1} = \frac{V_a - V_o}{R_f} + I_B^-$$

If $V_{in} = 0$ & $V_a = 0$

$$0 = \frac{0 - V_o}{R_f} + I_B^-$$

$$V_o = (I_B^-) R_f$$

MA → 741 , $I_B = 500\,nA$; $M = 1\,M\Omega$

$$V_o = 500 \times 10^{-9} \times 1 \times 10^{6}$$

$$V_o = 500\,mV$$

R-Compensation Resistor:

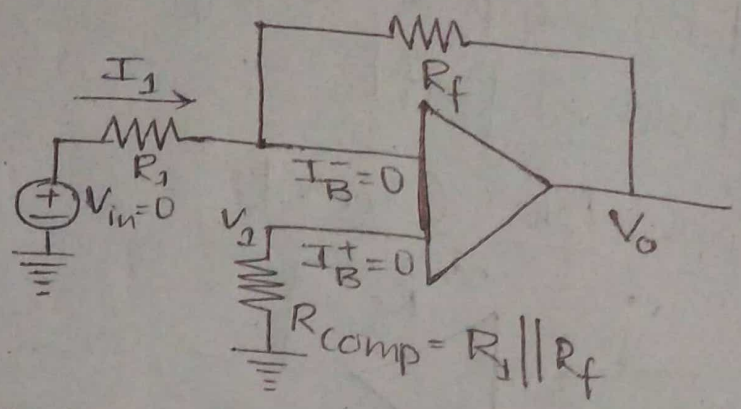

$$I_1 = I_2 + I_B^-$$

$$I_B^- = I_1 - I_2 \quad \text{—— (1)}$$

$$I_B^+ = \frac{V_1}{R_{comp}} \quad \text{—— (2)}$$

$$V_1 + 0 - V_2 + V_o = 0 \Rightarrow V_o = V_1 - V_2 \quad \text{—— (3)}$$

$$\frac{V_{in} + V_1}{R_1} = I_B^- + \frac{V_1 - V_o}{R_f} \quad \text{—— (4)}$$

If, $V_{in} = 0$, $V_{out} = 0$,

from (3) & (4), $\boxed{V_1 = V_2}$

$$I_B^- = \frac{V_2}{R_f} + \frac{V_1}{R_1}$$

$$I_B^- = \frac{V_1}{R_f} \quad \text{—— (5)}$$

$$I_B = \frac{V_1}{R_f} + \frac{V_1}{R_1}$$

$$I_B^- = I_B^+$$

$$\frac{V_1}{R_1} + \frac{V_1}{R_f} = \frac{V_1}{R_{comp}}$$

$$R_{comp} = \left(\frac{1}{R_1} + \frac{1}{R_f}\right)$$

$$= R_1 || R_2$$

(iii) Input Offset Voltage:

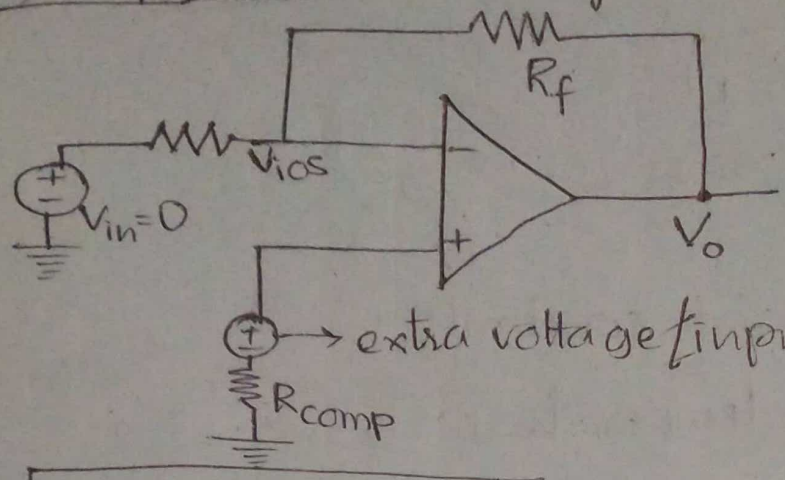

→ extra voltage / input offset voltage (V_{ios}) to make output $V_o=0$

$$\boxed{V_o = \left[1+\frac{R_f}{R_1}\right] V_{ios}}$$

(iv)

~~Output voltage depends~~

$$V_o = \left[1+\frac{R_f}{R_1}\right] V_{ios} + R_f I_{os}$$

(or)

$$\cancel{1+R_f/R_1} \quad V_o = \left[1+\frac{R_f}{R_1}\right] V_{ios} + R_f I_B$$

It is a combination of (i) & (ii)

(ii)

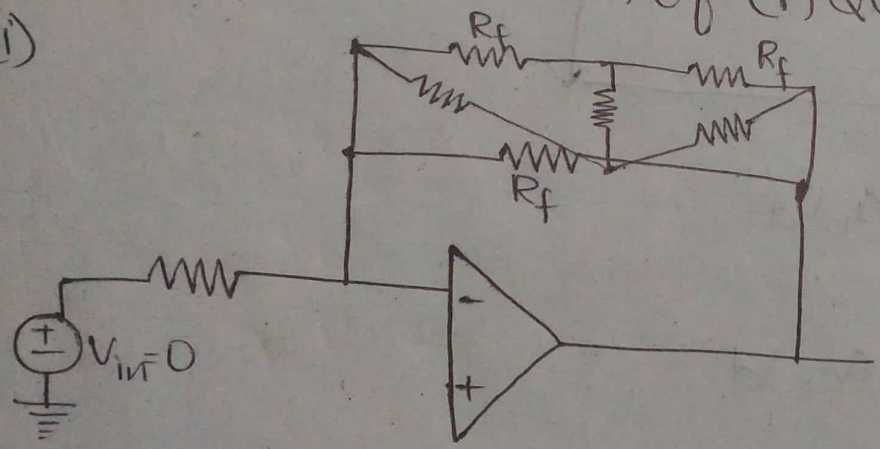

V) Thermal Drift:

$$I = I_0\left(e^{V/nV_T} - 1\right)$$

where, $V_T = KT$

$K \rightarrow$ Boltzmann's constant

$T \rightarrow$ absolute temperature

There is a change in voltage & current with respect to time - Thermal drift

AC Characteristics:

(i) Frequency Response:

Gain normal value $= |A|$

$20\log|A|$ dB

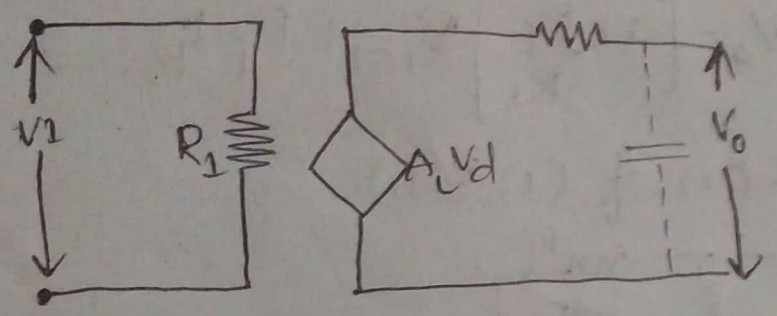

$$V_o = \frac{1/Cs}{R_o + 1/Cs} A_V V_d$$

$$V_o = \frac{1}{1 + R_o Cs} A_{OL} V_d$$

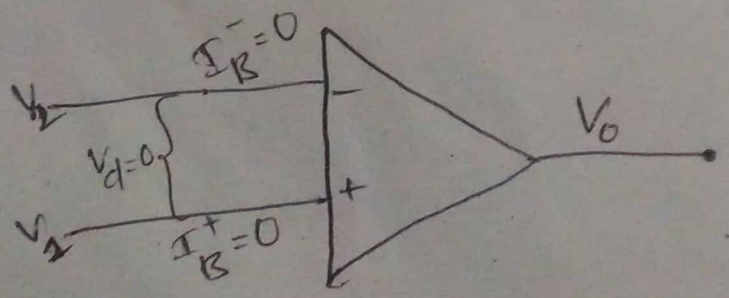

$s = j\omega$

$= j2\pi f$

$$V_o = \frac{1}{1+R_oC(j2\pi f)} A_L V_d$$

$$\frac{V_o}{V_d} = \frac{A_L}{1+j(f/f_1)} \quad , \text{ where, } f_1 = \frac{1}{2\pi R_o C}$$

$$|A| = \frac{A_L}{\sqrt{1+(f/f_1)^2}} \quad ; \quad |\phi| = -\tan^{-1}(f/f_1)$$

3dB cutoff frequency

(i) $f <<< f_1 \Rightarrow |A|\,dB = 20 \log A_L$

(ii) $f = f_1 \Rightarrow |A|\,dB = 20 \log \left(\frac{A_L}{\sqrt{2}}\right) = 20\log\frac{1}{\sqrt{2}} + 20\log A_L$
$= -3dB + 20 \log A_L$

(iii) $f >>>>> f_1 \Rightarrow |A|\,dB = -20\,dB/dec \downarrow$

Slew Rate:

$$S.R. = \left.\frac{dV}{dt}\right|_{max} \quad \frac{V}{\mu sec}$$

$$SR = \left.\frac{dV_c}{dt}\right|_{max}$$

$$SR = \left.\frac{dV_c}{dt}\right|_{max} = \frac{I_{max}}{C}$$

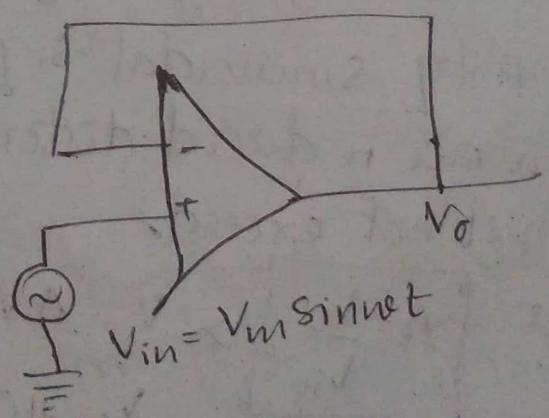

$V_{in} = V_m \sin\omega t$

$V_{out} = V_m \sin\omega t$

$$\frac{dV_{out}}{dt} = \omega . V_m \cos\omega t$$

$$S.R. = \left.\frac{dV_{out}}{dt}\right|_{max} = V_m . \omega . 1 \left(\frac{V}{s}\right)$$

$$S.R. = V_m \cdot 2\pi f_m \quad (V/s)$$

$$= V_m \cdot 2\pi f_m \times 10^{-6}$$

$$= \frac{2\pi f_m \cdot V_m}{10^6} \quad (V/\mu sec)$$

Problems:

① In the circuit shown in figure, if the V^+ and V^- are to be amplified by the same factor, the value of R

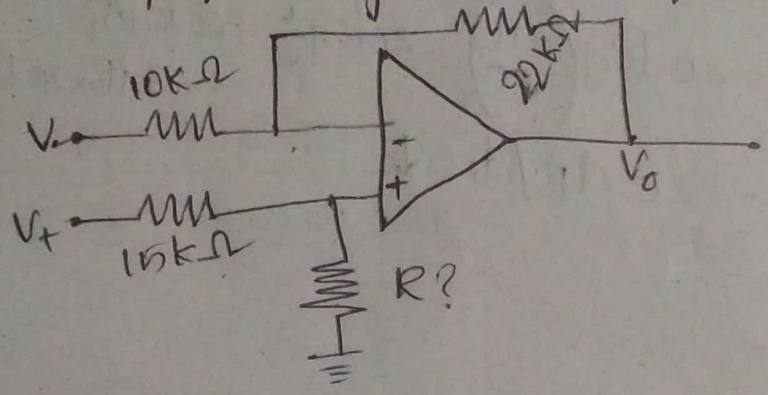

$$\frac{R_2}{R_1} = \frac{R_2}{R_1}$$

$$\frac{22k}{10k} = \frac{R}{15k}$$

$$R = \frac{22k \times 15k}{10k} = 33k$$

2) An amplifier using OP-AMP with slew-rate of 1 volt/μs and having a gain of 40dB. If this amplifier has to b amplify sinusoidal signal of 20KHz without any slew rate induced distortion, then the input signal must not exceed.

Solu: $\boxed{A = \frac{V_o}{V_{in}}} \Rightarrow V_o = A V_{in}$

$$V_o = 40 \cdot V_m \sin \omega t$$

$$\frac{dV_o}{dt} = 40 \cdot V_m \omega \times 1$$

$$SR = 40 \cdot V_m \omega$$

3) Which of the following electrical characteristics is not exhibited by ideal op-amp.

(i) infinite voltage gain (ii) infinite band width (iii) infinite output resistance (iv) infinite slew rate

4) Given that CMRR is 100 dB. Input Common mode voltage is 12V. Differential voltage gain 4000. Calculate output common mode voltage.

Solu:

$$CMRR = 100\,dB = 10^5$$

$$CMRR = \frac{A_{DM}}{A_{CM}}$$

$$10^5 = \frac{4000}{AC} \Rightarrow AC = 0.04V$$

$$V_{out} = V_{CM} \times A_{CM}$$

$$= 12 \times 0.04 = 0.48V$$

5) For a given OP-amp, CMRR is 10^5, differential gain $A_D = 10^5$. Determine the common mode gain (A_{cm}) of the amplifier.

Solu:

$$CMRR = 20\log\left(\frac{A_{DM}}{A_{CM}}\right)$$

$$\frac{10^5}{20} = \log\left(\frac{10^5}{A_{CM}}\right) \Rightarrow 5\times10^3 = \log_{10}\left(\frac{10^5}{A_{CM}}\right)$$

$$A_{CM} = \frac{10^5}{10} \times 5000$$

$$= 10-4998$$

$$A_{CM} = \frac{A_{DM}}{CMRR} = 1$$

6) The output voltage of an certain amplifier circuit changes by 20 volts in 4 μseconds. What is its slew rate?

Solu:

$$SR = \frac{I_{max}}{C} = \frac{20}{4\times10^{-6}} = 5V/\mu s$$

$$\frac{20V}{4\mu s} = 5V/\mu s$$

7) Determine output voltage for the inverting amplifier shown in figure below:

i) when $V_{in} = 20\ mV$ (dc)

ii) $V_{in} = -30\ \mu V$ peak sine wave

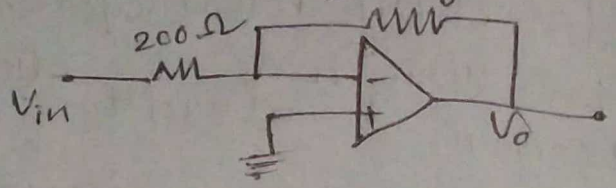

Soln. $10\Omega = 0.01 K\Omega$

i) $V_{in} = 2\ mil$ $\quad i_c = 0.02\ V$

$$V_o = \left(\frac{-R_f}{R_1}\right) V_{in} \Rightarrow V_o = \left(\frac{-10}{0.01}\right) 0.02 = -20V$$

1 milli = 0.01 volt

$1\Omega = 0.001 K\Omega$

1 microvolts $= 1 \times 10^{-6}$ V

8. The op-amp shown below is LM307, with input offset voltage $V_{IOS} = 10\ mV$. What's the max. possible output offset voltage.

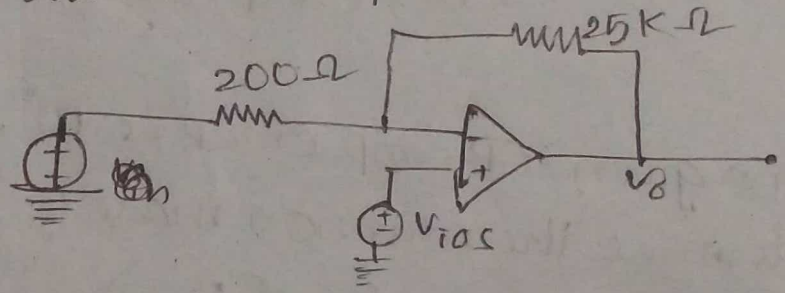

Soln.

$$V_o = \left(1 + \frac{R_f}{R_1}\right) V_{IOS}$$

$$= \left(1 + \frac{25}{20}\right) 10 \times 10^{-3}$$

$$V_o = 0.0225\ V$$

$$V_o = 2.25 \times 10^{-3}\ mV$$

9) What value of R_{comp} is needed to reduce the effect of input bias current.

(Note: $V_{ios} = 6\,mV$, $I_B = 500\,nA$)

Solu: Offset voltage (o/p)

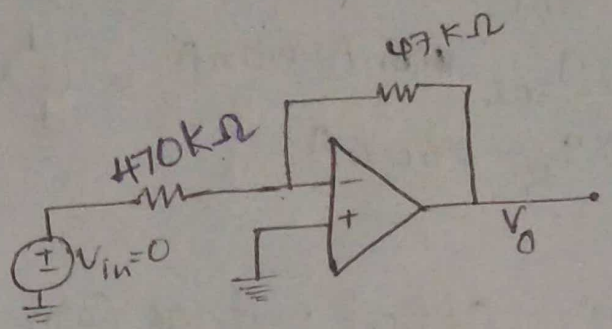

$$V_0 = \left[1+\frac{47k}{470k}\right] \times 6\times10^{-3} + 47\times10^{3} \times 5\times10^{-9}$$

$$V_0 = \left[\frac{11}{10}\right]\frac{6}{100} + 235\times10^{-6}$$

$$= \frac{66+235\times10^{-6}\times10^{3}}{1000}$$

$$= \frac{66+(235\times10^{-3})}{10000}$$

$$= \frac{66+0.235}{1000} = 0.066235\,V$$

10) Repeat the above question, if $R_f = 10k\Omega$, $R_1 = 1k\Omega$.

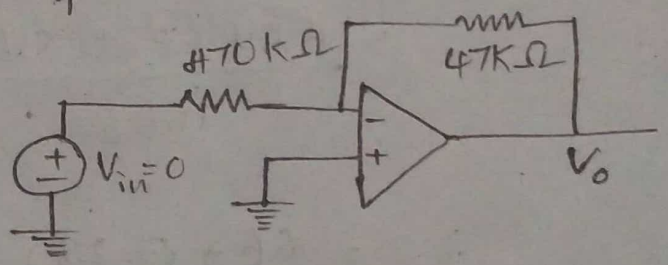

Solu:

$R_f = 10K\Omega$

$R_1 = 1K\Omega$

$I_{ios} = 50\,nA$, $V_{ios} = 7.5\,mV$, $I_n = 250\,nA$

$$V_0 = \left[1+\frac{R_f}{R_1}\right]V_{ios} + I_{ios}R_f$$

$$= [1+10]\,7.5\times10^{-3} + 50\times10^{-9}\times10\times10^{3}$$

$$= 7.5\times10^{-3} + 7.5\times5\times10^{-4}$$

$$V_0 = 7.508\,V$$

11. Compute the maximum [illegible] voltages as shown in below. The op-amp having following specifications:

i) $V_{IOS} = 7.5\ mV$

ii) $I_{IOS} = 50\ nA$

iii) $I_B = 250\ nA$

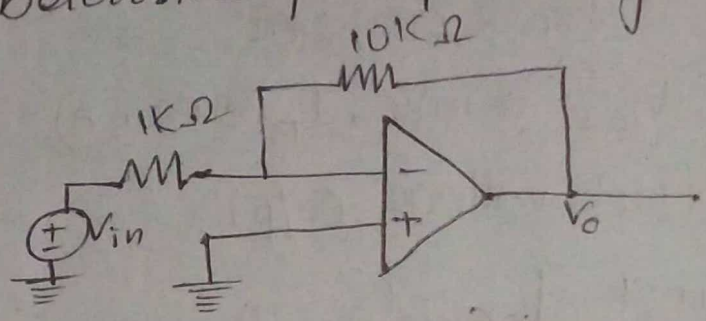

Soln: Offset voltage (o/p)

$$V_o = \left[1 + \frac{47K}{470K}\right] 6\times10^{-3} + 47\times10^{-3} \times 5\times10^{-9}$$

$$V_o = \left[\frac{11}{10}\right]\frac{6}{1000} + 235\times10^{-6}$$

$$= \frac{66 \times 235\times10^{-6}\times10^{3}}{1000}$$

$$= \frac{66 + (235\times10^{-3})}{1000}$$

$$= \frac{66 + 0.235}{1000}$$

$$= 0.066235\ V$$

$$V_o = 66.235\ mV$$

$$R_{comp} = \left[\frac{1}{R_1} + \frac{1}{R_2}\right]$$

$$= \left[\frac{1}{470} + \frac{1}{47}\right]$$

$$= \frac{470}{11} \, k\Omega$$

$$= 42.7 \, K\Omega$$

Converters:

→ There are 2 types of converters. They are:

(i) Voltage to Current converter

(ii) Current to Voltage converter ~~(Transconductance Amplifier)~~

(i) Voltage to Current Converter: Some of the input voltage is converted to current at the output. They are 2 types:

ⓐ Voltage to current converter with floating load.

ⓑ Voltage to current converter with grounded load.

ⓐ:

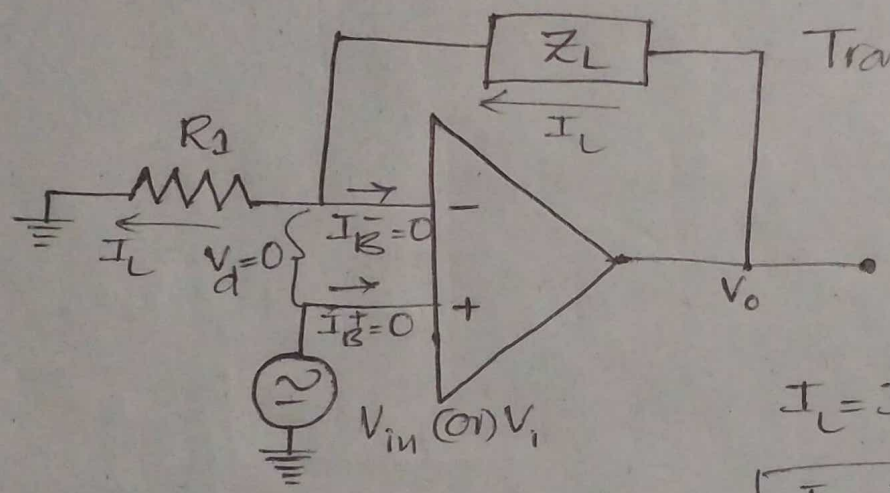

Transconductance Amplifier

$I_L = I_B^- + I_1$

$$\boxed{I_L = I_1}$$

$$\boxed{\frac{V_{in} - 0}{R_1} = I_1} \Rightarrow \boxed{I_L = \frac{V_{in}}{R_1}}$$

I_L = o/p load current

V_{in} = given i/p voltage

$$\boxed{I_L = \frac{V_{in}}{R}}$$

$$I_L = \frac{V_{in}}{R}$$

(Trans Conductance Amplifier)

(b) Voltage to current converter with grounded load:

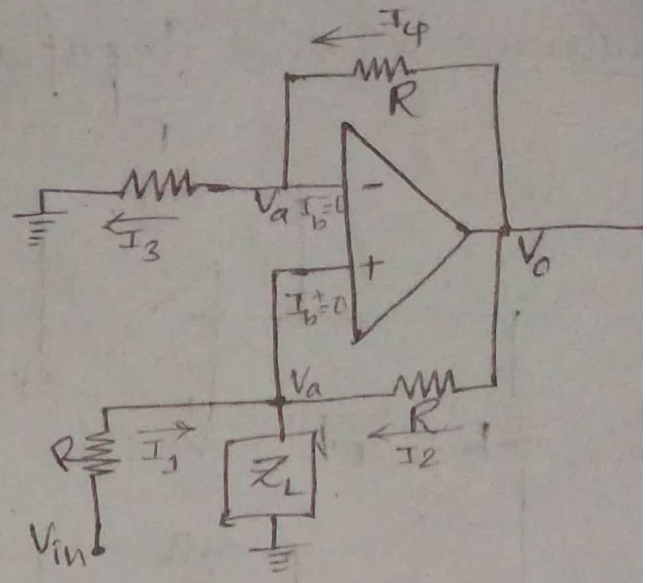

$$I_L = I_1 + I_2$$

$$I_L = \frac{V_{in} - V_a}{R} + \frac{V_o - V_a}{R}$$

$$I_L = \frac{V_{in} + V_o - 2V_a}{R} \quad \text{—— (1)}$$

$$I_4 = I_3 + I_B^-$$

$$\frac{V_o - V_a}{R} = \frac{V_a - 0}{R} + 0$$

$$\Rightarrow V_o = 2V_a \quad \text{—— (2)}$$

Substitute (2) in (1)

$$I_L = \frac{V_{in} + 2\cancel{V_a} - 2\cancel{V_a}}{R} \Rightarrow \boxed{I_L = \frac{V_{in}}{R}}$$

(Transconductance Amplifier)

(ii) Current to Voltage Converter: (Trans Resistance Amplifier)

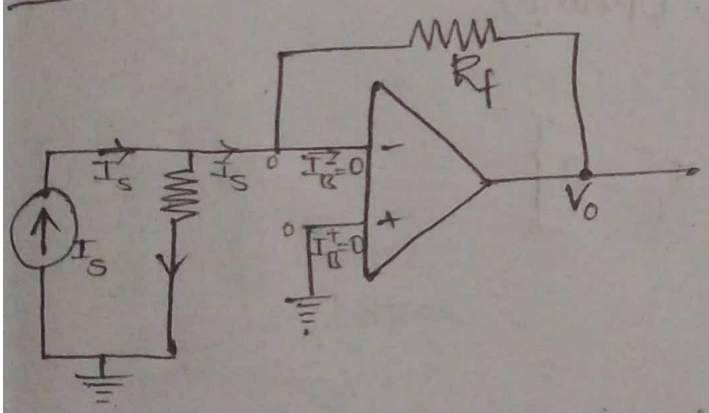

$$I_s = I_f + I_B^-$$

$$\boxed{I_s = I_f} \quad \text{—— (1)}$$

$$\frac{0 - V_o}{R_f} = I_f$$

$$\frac{-V_o}{R_f} = I_s$$

$$\Rightarrow \boxed{V_o = -I_s R_f} \quad [\because I_s = I_f]$$

[Trans Resistance Amplifier]

Dt: 16/02/2024

Instrumentational Amplifier:

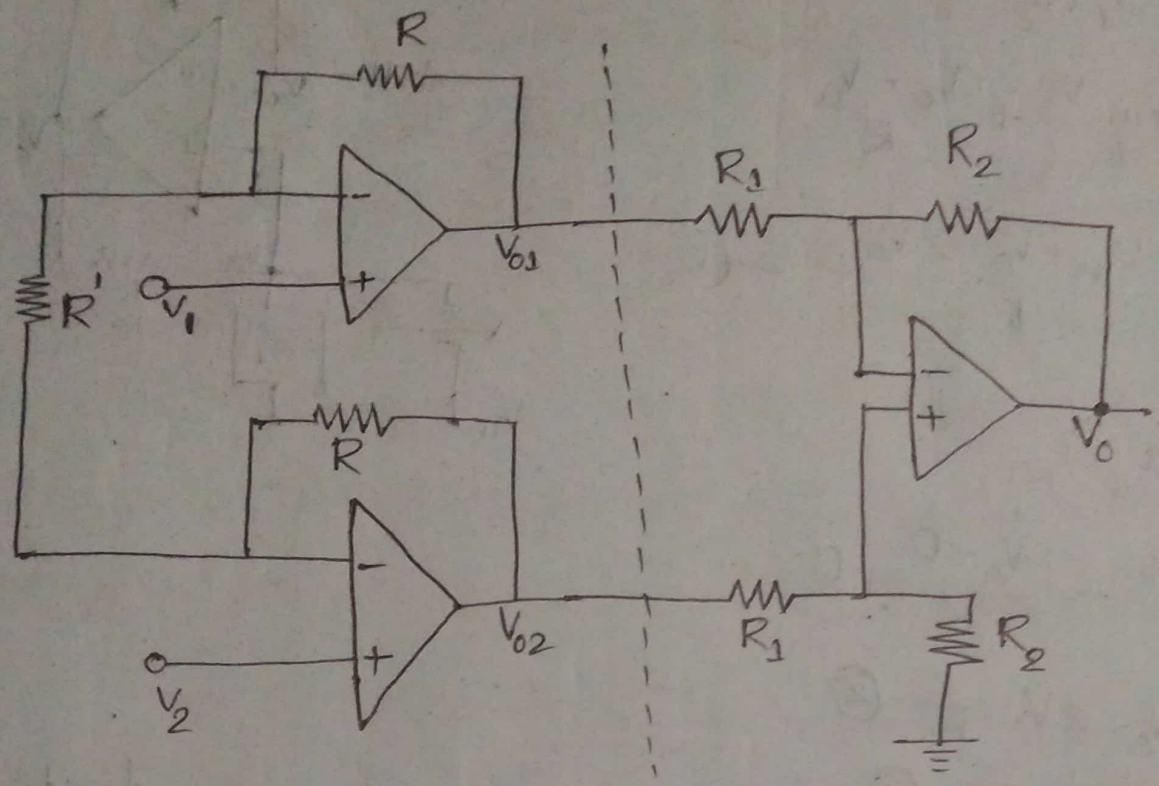

$$\boxed{V_0 = \frac{R_2}{R_1}(V_{02} - V_{01})} \quad \text{—— (1)}$$

→ Generally, it is used in Industrial & Commercial Purposes.

At Inverting terminal (~~lower~~ upp - OPAMP)

KCL

$$I_1 = I_B^- + I_2 \qquad [\because I_B^- = 0]$$

$$I_1 = I_2$$

$$\frac{V_{01} - V_1}{R} = \frac{V_1 - V_2}{R'}$$

$$V_{01} = \frac{R(V_1 - V_2)}{R'} + V_1 \quad \text{—— (2)}$$

At Inverting terminal (lower - OPAMP)

$$I_2 = I_B^- + I_3$$

$$\frac{V_1 - V_2}{R'} = 0 + \frac{V_2 - V_{02}}{R}$$

$$V_{02} = -R\frac{(V_1 - V_2)}{R'} + V_2 \quad \text{—— (3)}$$

from (1)

$$V_0 = \frac{R_2}{R_1}\left(-\frac{R(V_1 - V_2)}{R'} + V_2 - \frac{R(V_1 - V_2)}{R'} - V_1\right)$$

$$V_0 = \frac{R_2}{R_1}\left((V_2 - V_1) - \frac{2R}{R'}(V_1 - V_2)\right)$$

$$V_0 = -\frac{R_2}{R_1}\left((V_1 - V_2) + \frac{2R}{R'}(V_1 - V_2)\right)$$

$$V_0 = -\frac{R_2}{R_1}(V_1 - V_2)\left(1 + \frac{2R}{R'}\right)$$

$$\boxed{V_0 = -\left(1 + \frac{2R}{R'}\right)\frac{R_2}{R_1}(V_1 - V_2)}$$

Filter:

5 types of filters.

LPF

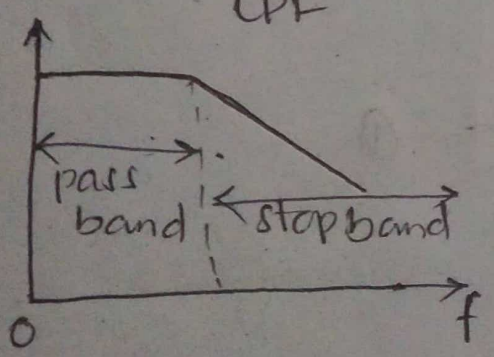

HPF

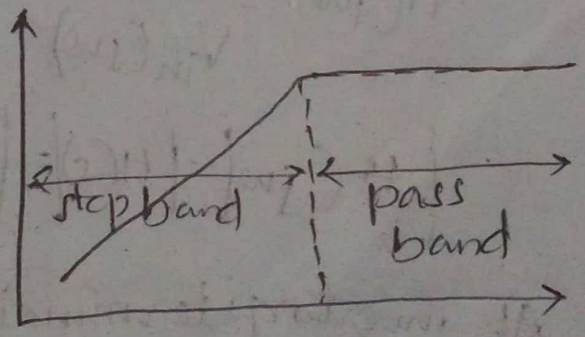

- - - - - - - ideal

——— practical

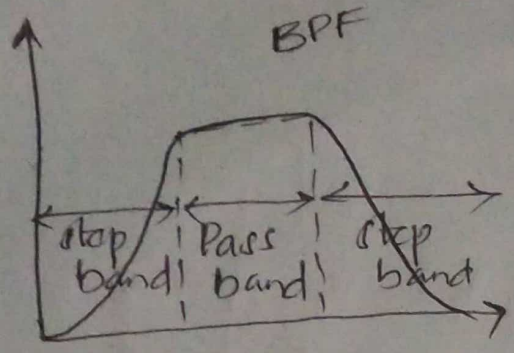

Band Pass filter

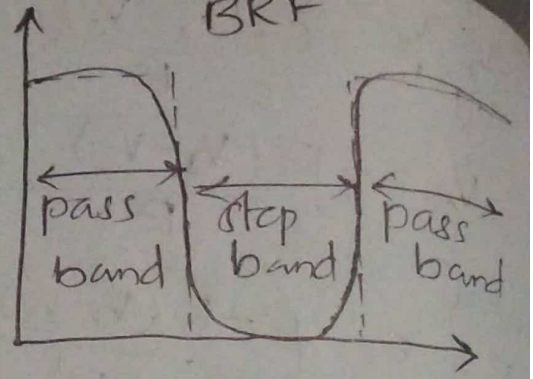

Band Reject Filter

Low Pass Filter:

First Order LPF:

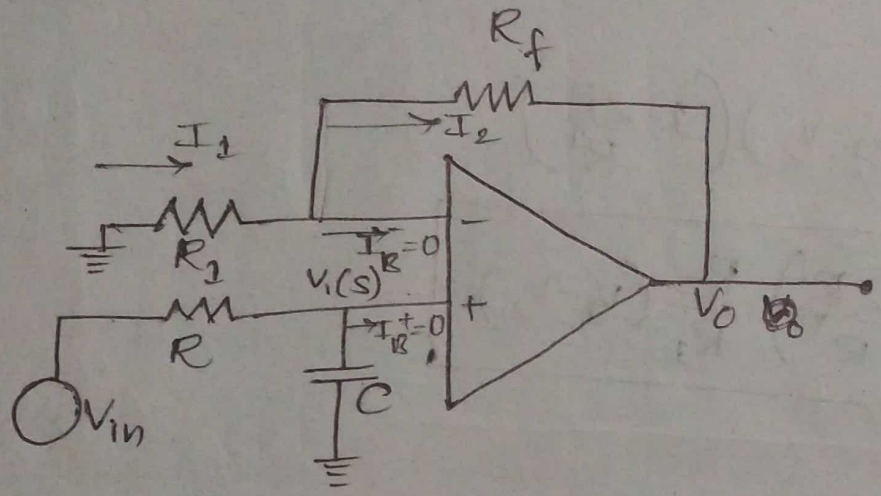

$$H(s) = \frac{V_o(s)}{V_{in}(s)}$$

$$H(j\omega) = \frac{V_o(j\omega)}{V_{in}(j\omega)}$$

$$|H(j\omega)| = |H(s)| = \left|\frac{V_o(s)}{V_{in}(s)}\right| \quad \text{--- (1)}$$

At inverting terminal,

$$I_1 = I_B^- + I_2$$

$$\frac{0 - V_1(s)}{R_1} = \frac{V_1(s) - V_o(s)}{R_f} + 0$$

$$V_o(s) = \left(1 + \frac{R_f}{R_1}\right)$$

$$\boxed{\frac{V_o(s)}{V_1(s)} = A_f \text{ or } A_o = \left(1 + \frac{R_f}{R_1}\right)} \quad \text{--- (2)}$$

At non-inverting terminal,

$$V_1(s) = \frac{1/cs}{R + \frac{1}{cs}} \times V_{in}(s)$$

$$\frac{V_1(s)}{V_{in}(s)} = \frac{1}{RCs+1} \quad \text{--- (1)}$$

from (1),

$$\frac{V_o(s)}{V_{in}(s)} = \frac{V_o(s)}{V_1(s)} \times \frac{V_1(s)}{V_{in}(s)}$$

$$= \left(1 + \frac{R_f}{R_1}\right) \times \frac{1}{(RCs+1)}$$

$$\frac{V_o(s)}{V_{in}(s)} = \frac{A_o}{1+RCs}$$

$$\frac{V_o(s)}{V_{in}(s)} = \frac{A_o}{1 + j2\pi f RC}$$

$$= \frac{A_o}{1 + j(f/f_c)}, \text{ where } f_c = \frac{1}{2\pi RC}$$

$$\frac{V_o(s)}{V_{in}(s)} = \frac{A_o}{\sqrt{1 + (f/f_c)^2}}$$

ⓐ If, $f <<<< f_c$, then

$$|H(s)| = H(j\omega) = A_0$$

ⓑ $f == f_c$

$$|H(s)| = \frac{A_0}{\sqrt{2}}$$

3dB cutoff frequency

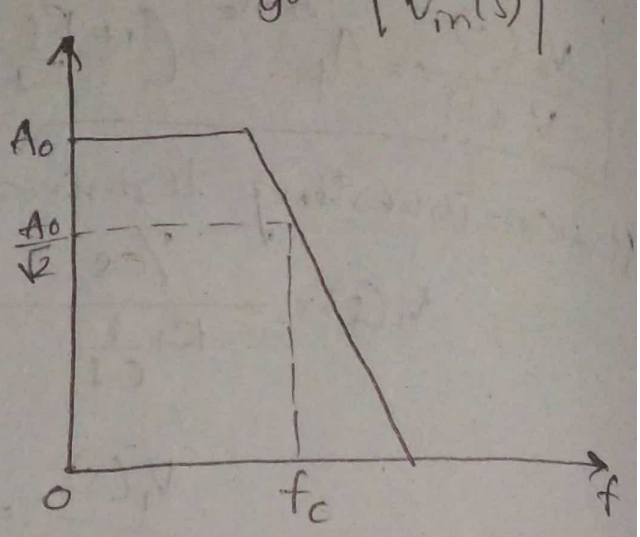

ⓒ $f >>>> f_c$

$$|H(s)| = 0$$

$$\left[\begin{array}{l} 20 \log 10^{0} \\ = 20 \times 0 \\ = 0\,dB \end{array}\right]$$

Second Order LPF:

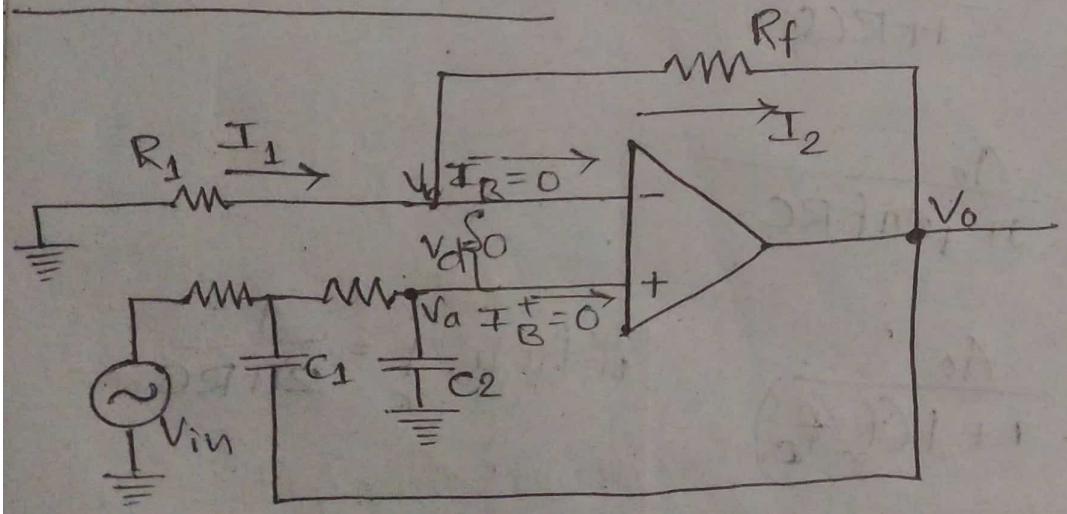

Let V_a is node potential at non-inverting terminal from Ideal Characteristics ($A = \infty$)

$$V_d = 0, \quad V_a - V_b = 0$$

$$\boxed{V_a = V_b}$$

At Inverting terminal apply KCL,

$$I_1 = I_2 + I_B^-$$

$$\frac{0 - V_b}{R_1} = \frac{V_b - V_0}{R_f}$$

$$\frac{V_0}{V_b} = \frac{V_0}{V_a} = \left(1 + \frac{R_f}{R_1}\right) = A_0 \quad \text{--- (1)}$$

At non-inverting terminal, apply KCL

$$I_3 = I_4 + I_5$$

$$\frac{V_{in} - V_c}{R_1} = \frac{V_c + V_0}{1/SC_1} + \frac{V_c - V_a}{R_2} \quad \text{--- (2)}$$

$$V_a = \frac{1/C_2 S}{R + \frac{1}{C_2 S}} \times V_c = \frac{1}{(1 + R_2 C_2 S)} V_c$$

$$V_c = (1 + R_2 C_2 S) V_a \quad \text{--- (3)}$$

Sub. (3) in (2)

$$\frac{V_{in} - (1 + R_2 C_2 S) V_a}{R_1} = SC_1 (1 + R_2 C_2 S) V_a - V_0 SC_1 + \frac{(C_1 + C_2 R_2 S)}{R_2}$$

$$\Rightarrow V_{in} - (1 + R_2 C_2 S) V_a = SR_1 C_1 (1 + R_2 C_2 S) V_a - V_a SR_1 C_1 + (C_1 + SC_2 R_2)(V_a - V_a) \frac{R_1}{R_2}$$

$$\Rightarrow R_2 V_{in} + V_0 SR_2 R_1 C_1 = R_2 (1 + R_2 C_2 S) V_a + SR_1 R_2 (1 + R_2 C_2 S) V_a + (C_1 SC_2 R_2)(V_a - V_a) R_1$$

$$V_a = \frac{R_2 V_{in} + V_o S R_1 R_2 C_1}{R_2 (1 + R_2 C_2 S) + S R_1 R_2 C_1 (1 + R_2 C_2 S) + (C_1 + S C_2 R_2)^{-1})}$$

$$V_a = \frac{R_2 V_{in} + V_o S R_1 R_2 C_1}{R_2 [C_1 + R_2 C_2 S) \cdot (R_2 + S R_1 R_2 C_1 + R_1) - R_1} \quad \text{--- (1)}$$

from (1), $\frac{V_o}{V_a} = A_f = \left(1 + \frac{R_f}{R_1}\right)$

$$V_o = A_f V_a = A_o V_a = \left(1 + \frac{R_f}{R_1}\right) \cdot V_a$$

$$V_o = A_f \left[\frac{R_2 V_{in} + V_o S R_1 R_2 C_1}{(1 + R_2 C_2 S)(R_2 + S R_1 R_2 C_1 + R_1) - R_1} \right]$$

$$\frac{V_o}{V_{in}} = \frac{AF}{\frac{s^2 + (R_2 C_2 + R_1 C_2 + R_1 C_1 - A_f R_1 C_1) s}{R_1 R_2 C_1 C_2} + \frac{(A-1)}{R_1 R_2 C_1 C_2}} \quad \text{--- (2)}$$

We know that,

$$\frac{V_o(s)}{V_{in}(s)} = \frac{A}{s^2 + 2\xi \omega_n + \omega_n^2}$$

$$\omega_n^2 = \frac{1}{R_1 R_2 C_1 C_2} \Rightarrow f_H = \frac{1}{2\pi \sqrt{R_1 R_2 C_1 C_2}}$$

$$\left| \frac{V_o}{V_{in}} \right| = \frac{A_f}{\sqrt{(1 + (f/f_H)^4}}$$

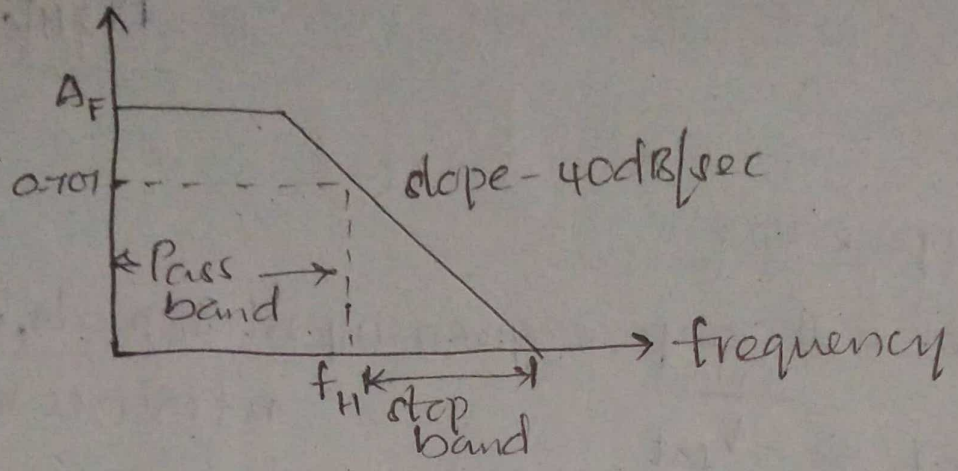
A_F
0.707
slope - 40dB/sec
Pass band
frequency
f_H
stop band

OP-AMP Comparator:

→ Comparator will compare given input signals, with known reference values.

	Output
$V_i < V_{ref}$	$\Rightarrow -V_{sat}$
$V_i > V_{ref}$	$\Rightarrow +V_{sat}$
$V_i = V_{ref}$	$\Rightarrow 0$

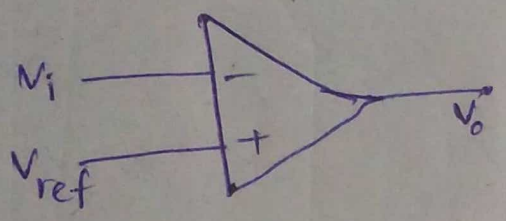

Investing Comparator

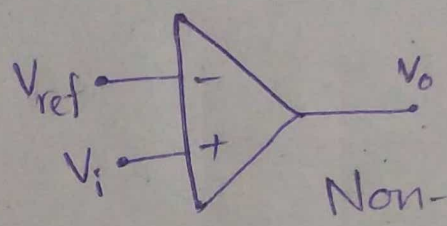

Non-Investing Comparator

Characteristics (Ideal Comparator Characteristics):

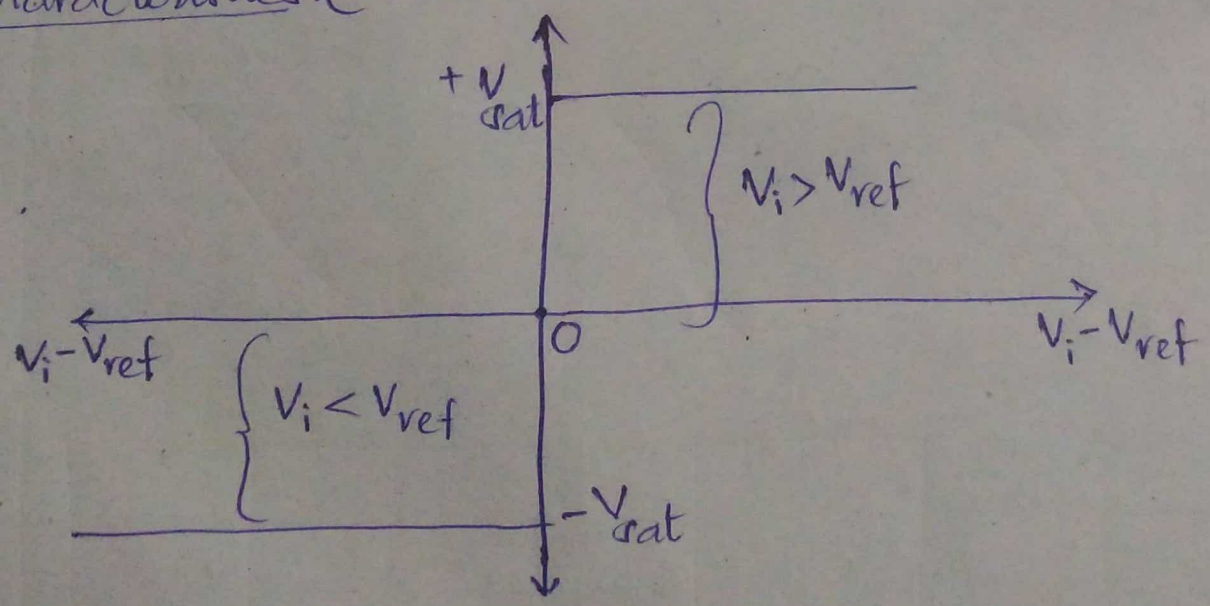

Practical Comparator Characteristics:

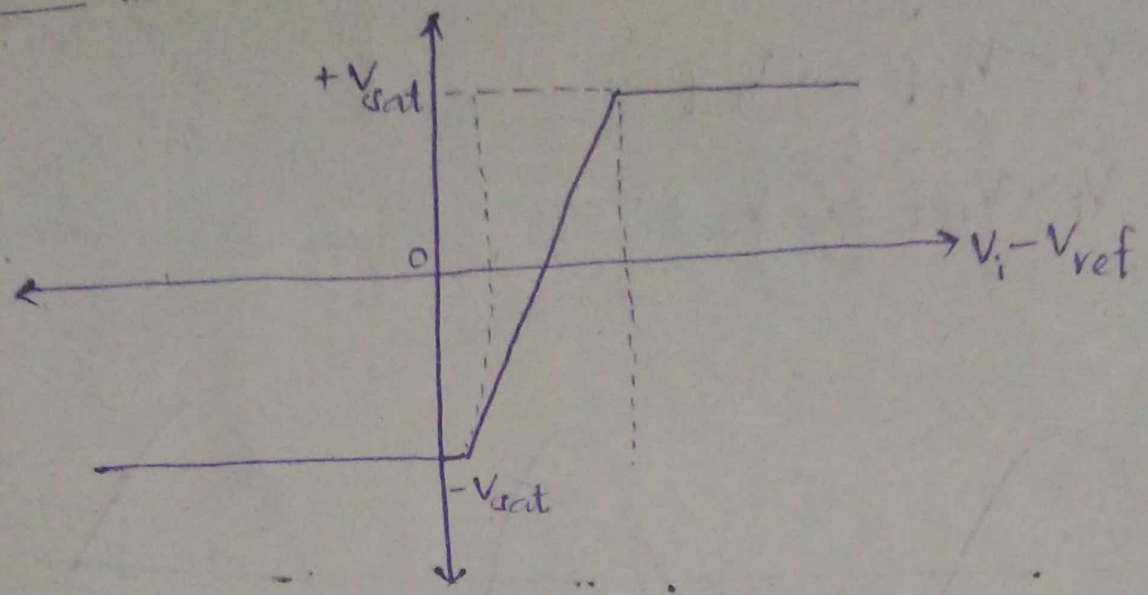

$$\text{Slew Rate} = \frac{dV_o}{dt}$$

$$dt = \frac{dV_o}{SR} \Rightarrow dt = \frac{2\,V_{sat}}{0.5} \qquad [\because \text{Let, } V_{sat} = 15V]$$

$$= \frac{2 \times \cancel{150}^{30}}{0.\cancel{5}}$$

$$= 60\ \mu sec$$

Limitation of Comparator: (Practical Comparator)

→ We cannot determine $(V_i - V_{ref})$ during Transition period. (Slew Rate)

Inverting Comparator:

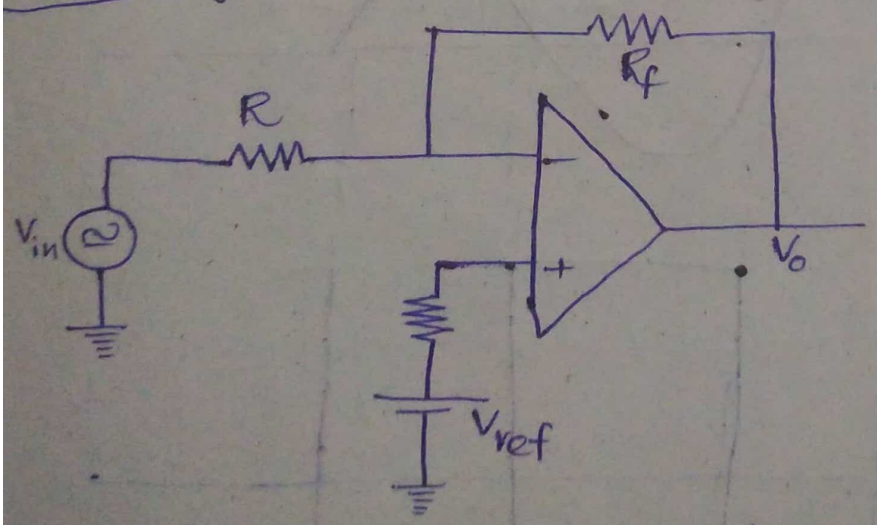

If input is given to investing terminal & known reference voltage is given to non-investing terminal, then it is called Inverting Comparator

For Inverting Comparator.

$V_i < V_{ref} \Rightarrow +V_{sat}$

$V_i > V_{ref} \Rightarrow -V_{sat}$

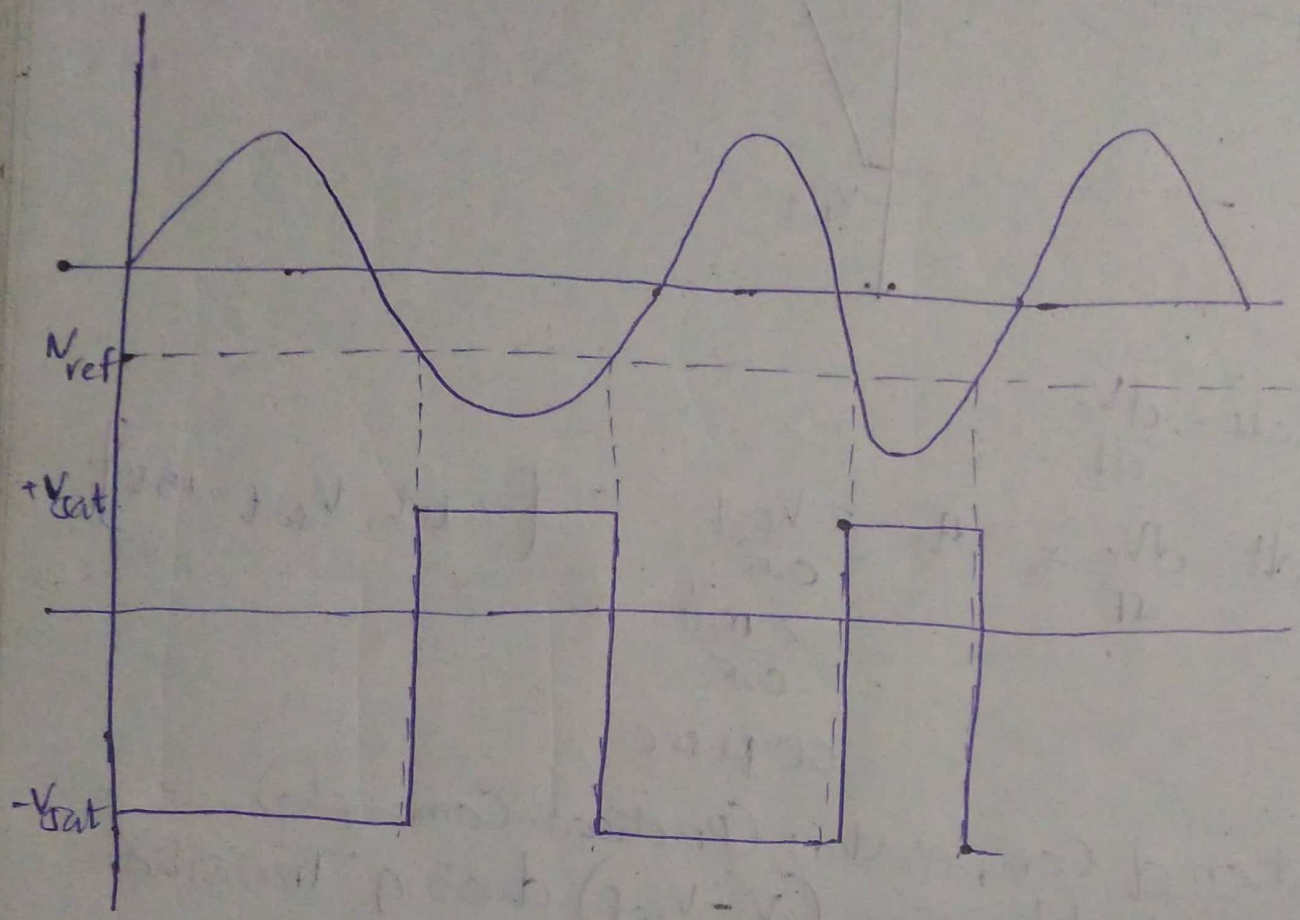

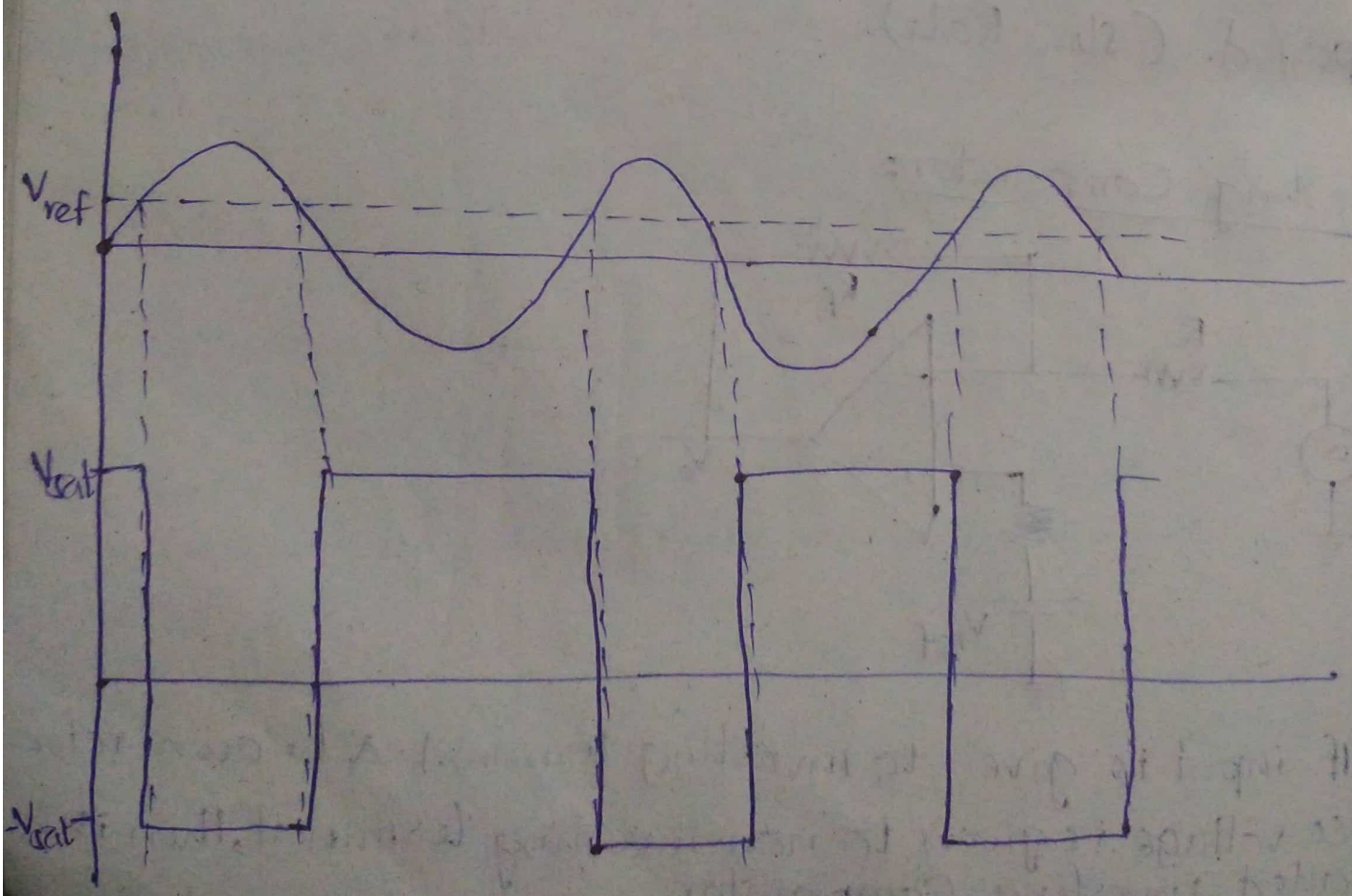

Non-Investing Comparator:

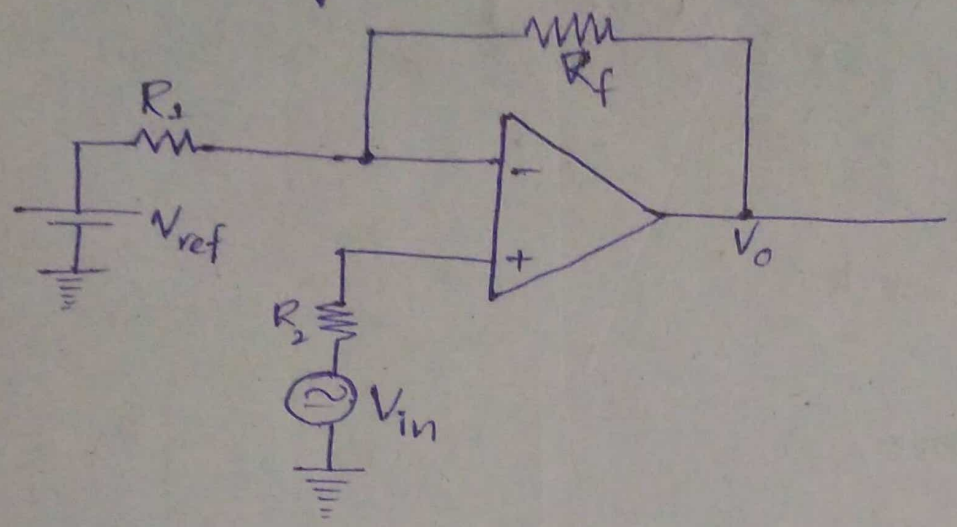

Applications:

→ Zero-crossing Detector [$V_{ref} = 0$]

→ Window Detector

→ Phase meter

→ Time Marker Generator

Zero Crossing Detector:

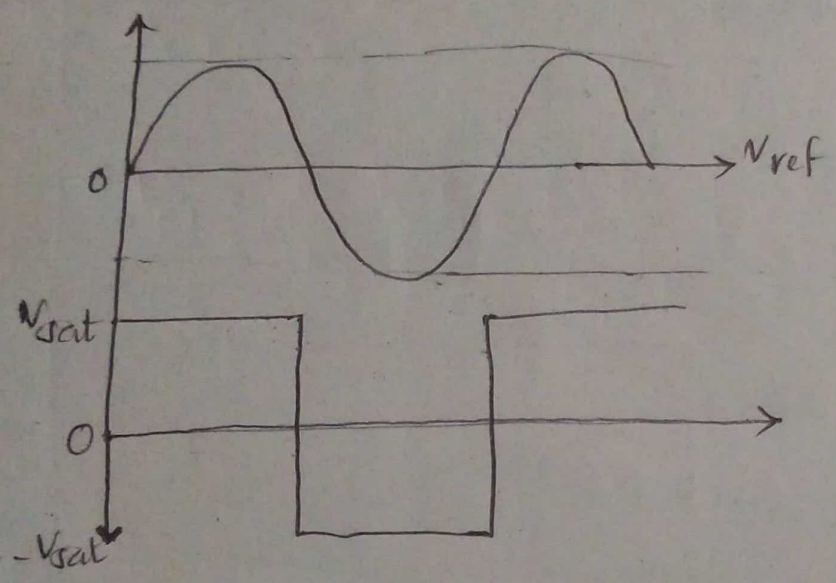

Regenerative Comparator:

→ A Circuit in which positive feedback is used is called Regenerative Comparator.

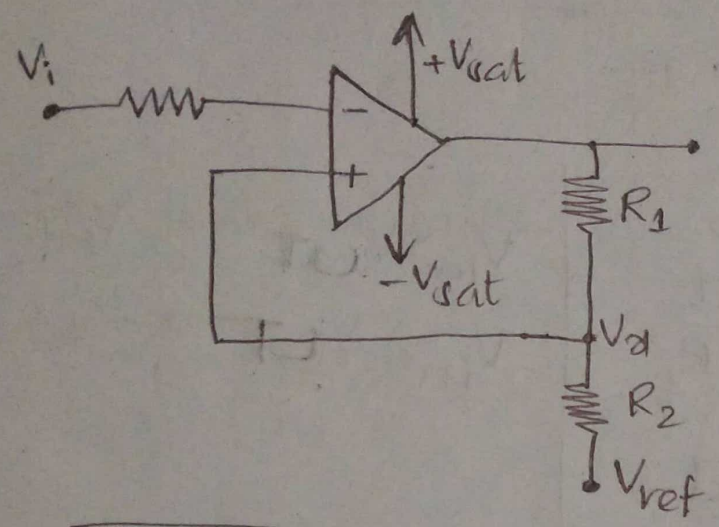

$A_{CL} = \frac{G}{1+GH}$ (NF)

$\frac{G}{1-(\text{loop gain})} = \frac{A_{OL}}{1-(A_{OL}\beta)}$

$A_{OL} \times \beta \rightarrow$ loop gain

$\frac{G}{1-(-GH)} = \frac{G}{1+GH}$

→ $\boxed{A_{OL} \times \beta = 1}$ is called Unity Gain Feedback.

→ Due to variations in Tempesature, Supply voltages, in general $A_{OL} \times \beta \neq 1$

$A_{OL} \cdot \beta$ = loop gain > 1

Hysterisis loop

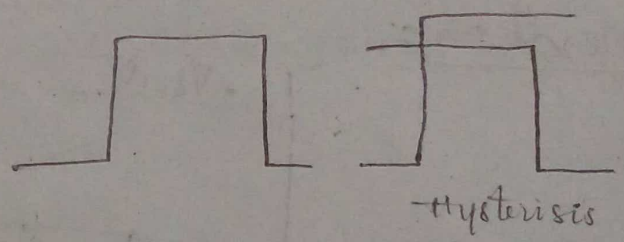

→ A circuit

By applying Voltage Divider Rule,

$$V_d = \frac{R_1 V_{ref}}{R_1+R_2} + \frac{R_2 V_o}{R_1+R_2}$$

R_3 is a compensation resistor

$$R_3 = R_1 \| R_2$$

Working:

→ When input voltage triggers output voltage, when input voltage exceeds certain voltage.

$+V_{sat}$ $-V_{sat}$

$\boxed{V_{UT} ; V_{LT}}$ → Lower Threshold Voltage

↳ Upper Threshold Voltage

If $V_a = V_{UT}$;

$$V_a = V_{UT} = \frac{R_1 V_{ref}}{R_1+R_2} + \frac{R_2 V_{sat}}{R_1+R_2}$$

$$V_{LT} = \frac{R_1 V_{ref}}{R_1+R_2} - \frac{R_2 V_{sat}}{R_1+R_2}$$

$V_{in} > V_{UT} \rightarrow V_{sat}$

$V_{in} < V_{LT} \rightarrow -V_{sat}$

Operation:

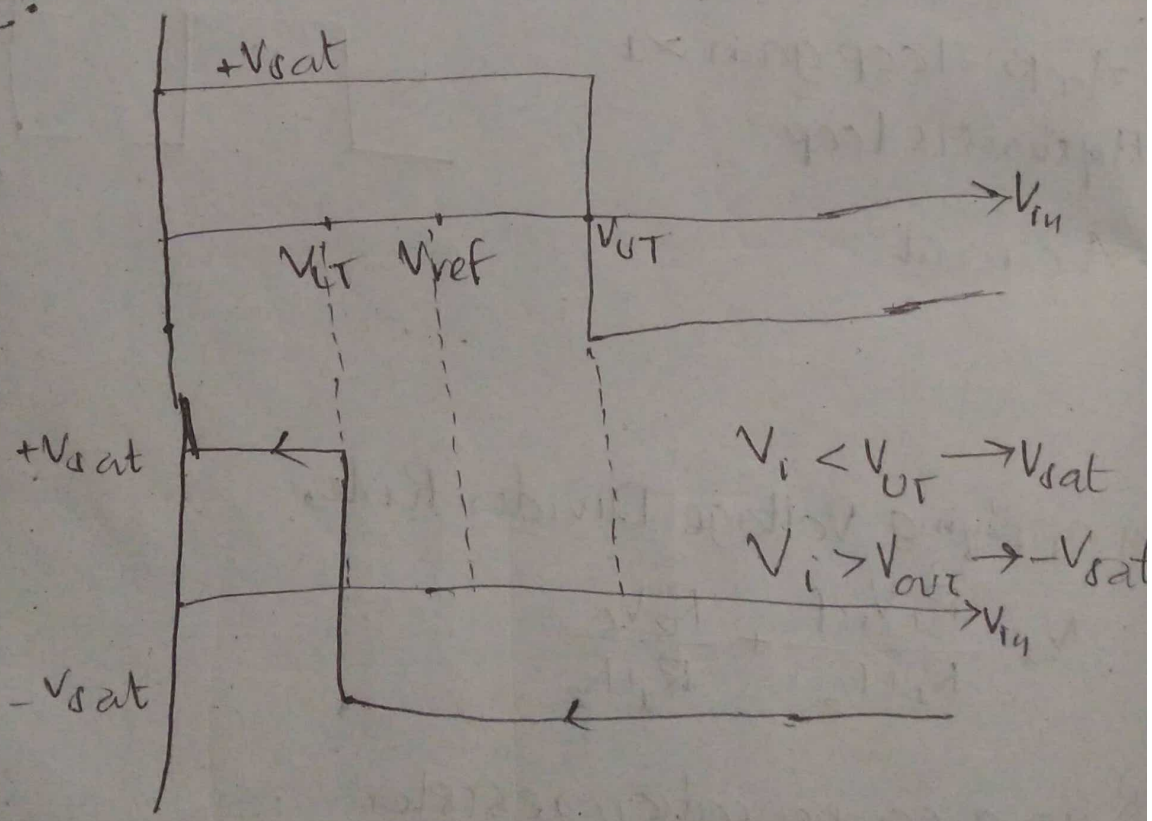

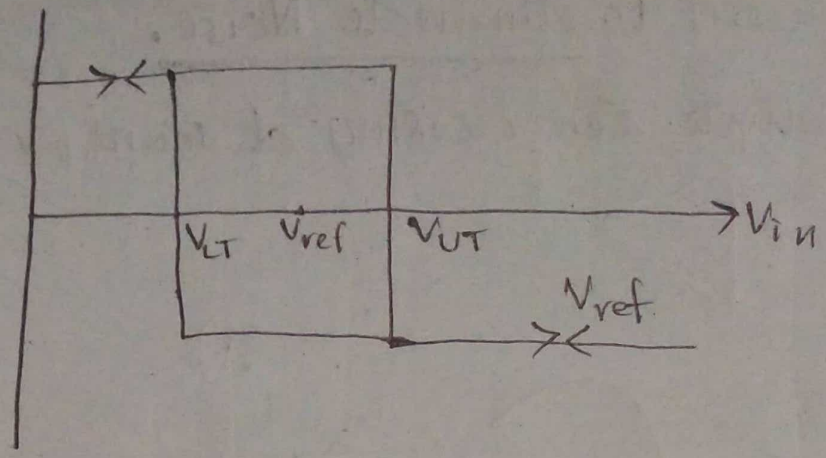

Backlash Phenomenon (or) Hysteresis

Find Hysteresis width, $\boxed{V_H = V_{UT} - V_{LT}}$

$$V_H = \left[\frac{R_1 V_{ref}}{R_1+R_2} + \frac{R_2 V_{sat}}{R_1+R_2}\right] - \left[\frac{R_1 V_{ref}}{R_1+R_2} - \frac{R_2 V_{sat}}{R_1+R_2}\right]$$

$$= \frac{2R_2 V_{sat}}{R_1+R_2}$$

→ Regenerative Comparator is called as Schimitt Trigger or square wave generator.

→ If sine wave is given as input.

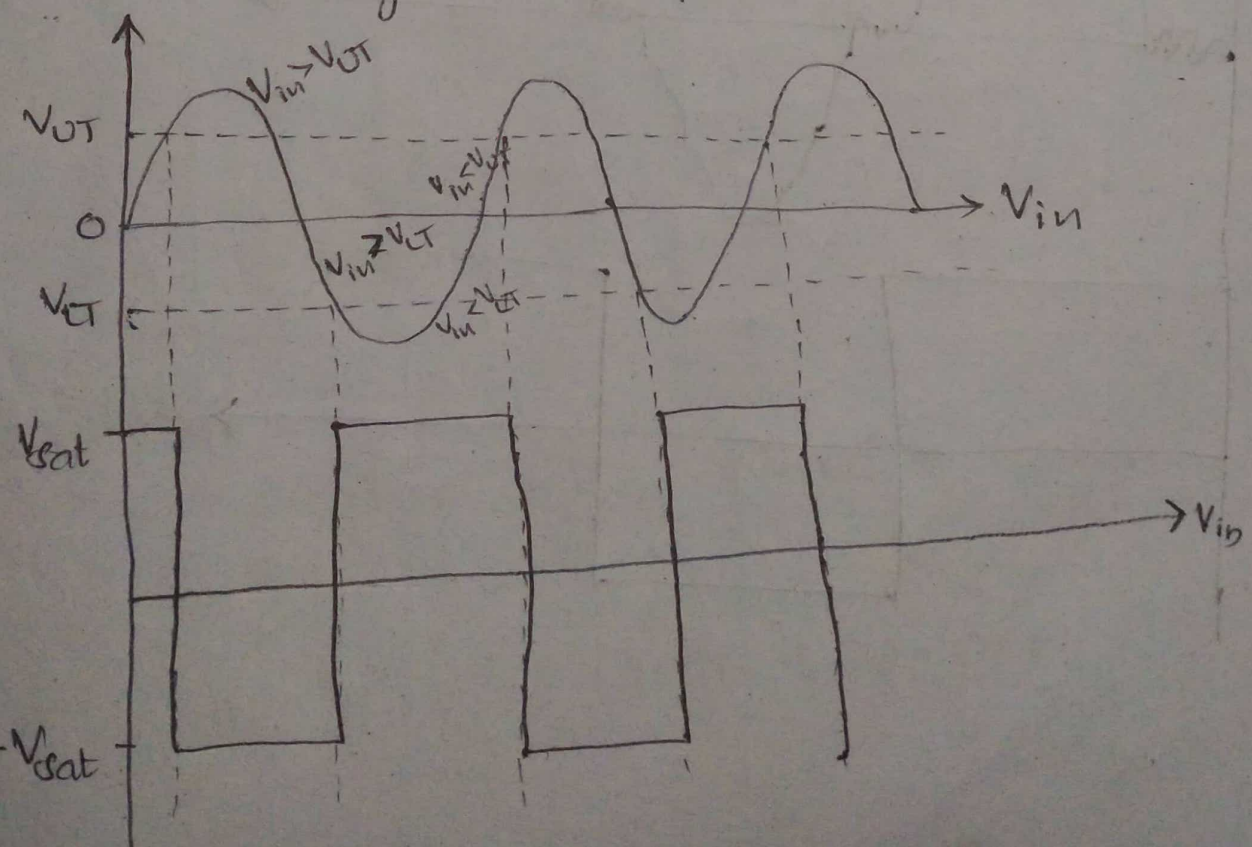

→ This Circuit is used to eliminate Noise.

→ If we detect Multiple Zero crossing at same place, it will detect all.

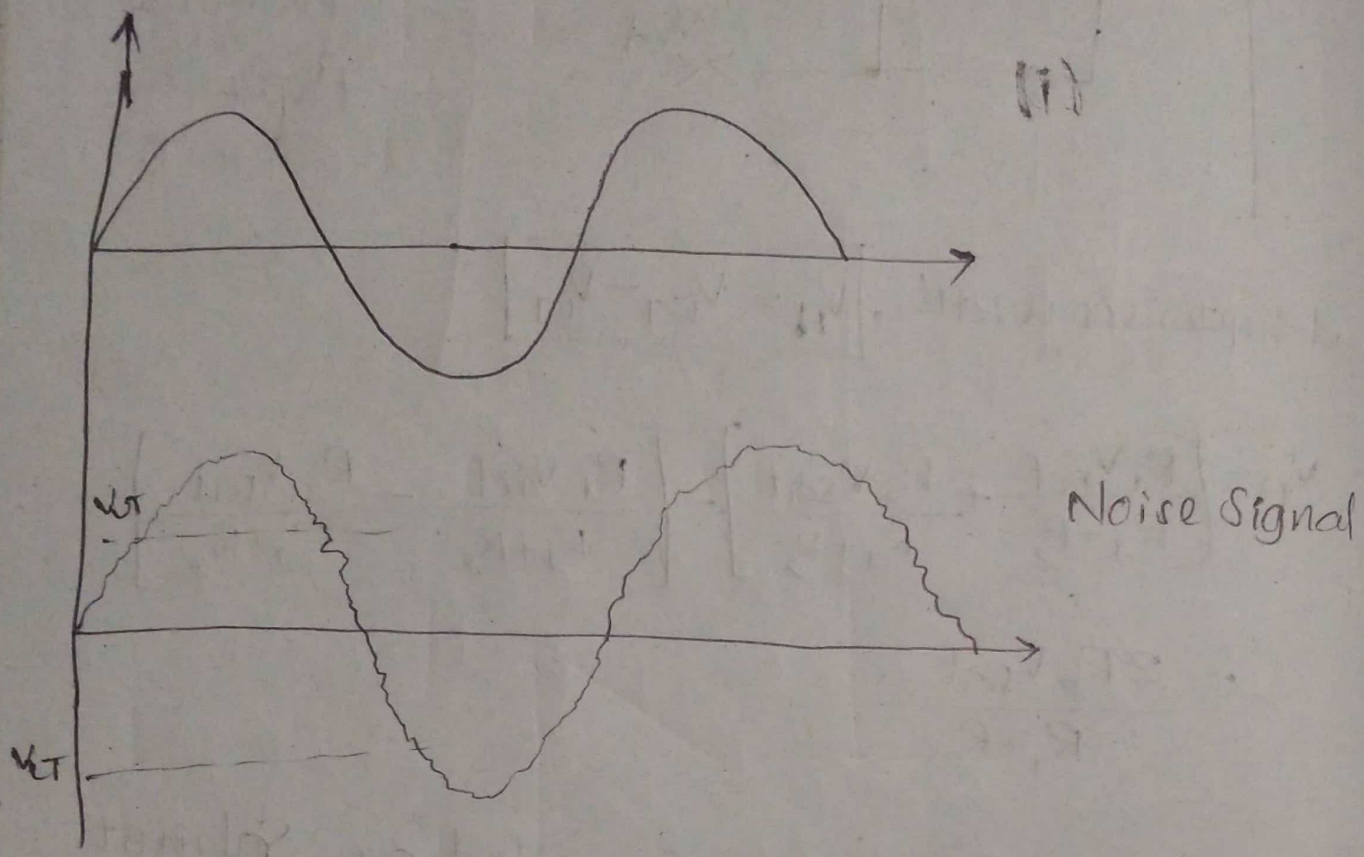

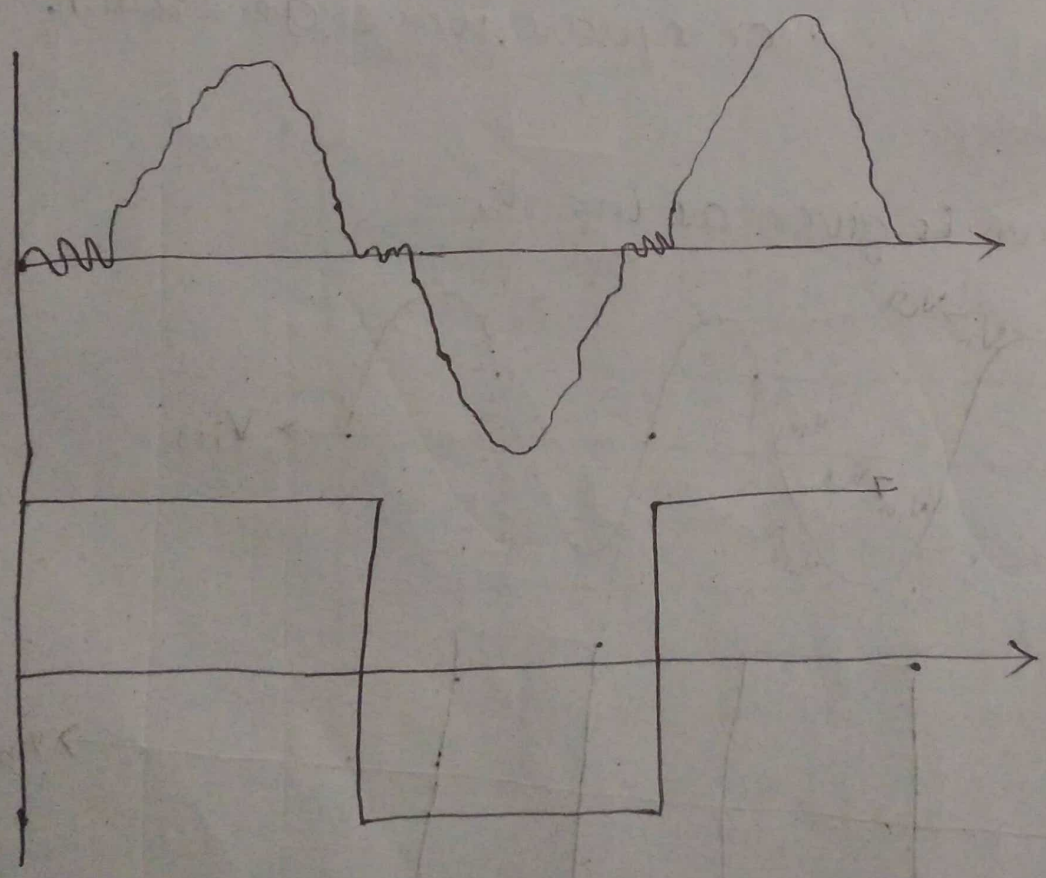

Cut-in voltage (or) Built-in Potential } 0.7 V Si, 0.3 V Ge

OP-AMP Using Diodes: (Precision Diode)

→ It can rectify the input signals in the order of milli (or) micro volts

→ Clipper, Clamper, Half wave rectifier, full wave rectifiers.

Precision Half-Wave Rectifier:

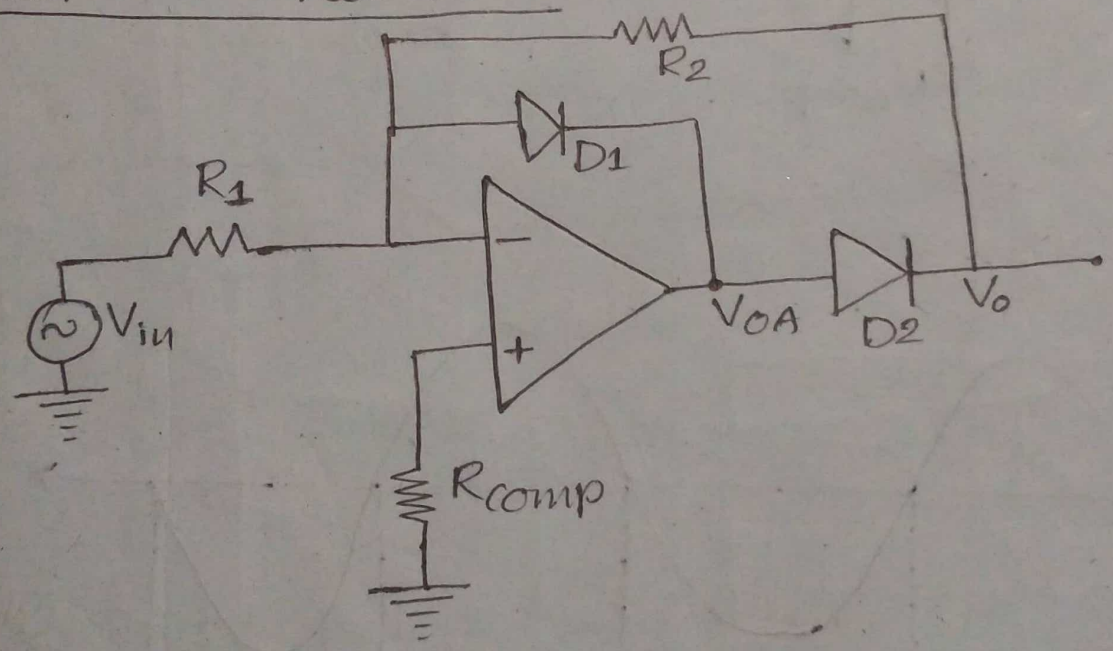

Operation:

$V_{in} \Rightarrow$ positive : V_{OA} = Negative

↓

D_1 = ON & D2 = OFF

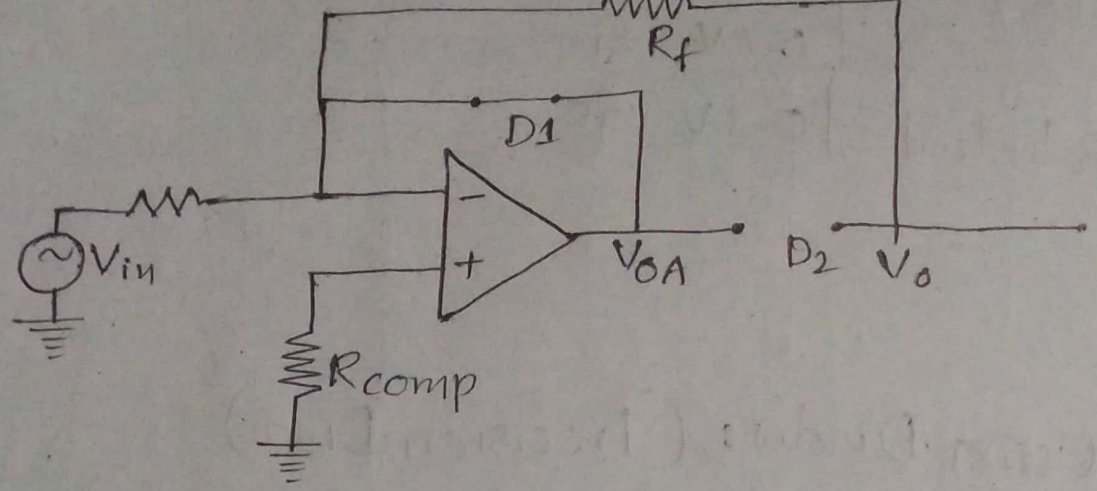

V_{in} = Negative $\Rightarrow V_{OA} = +Ve$

$D_1 = OFF$ & $D2 = ON$

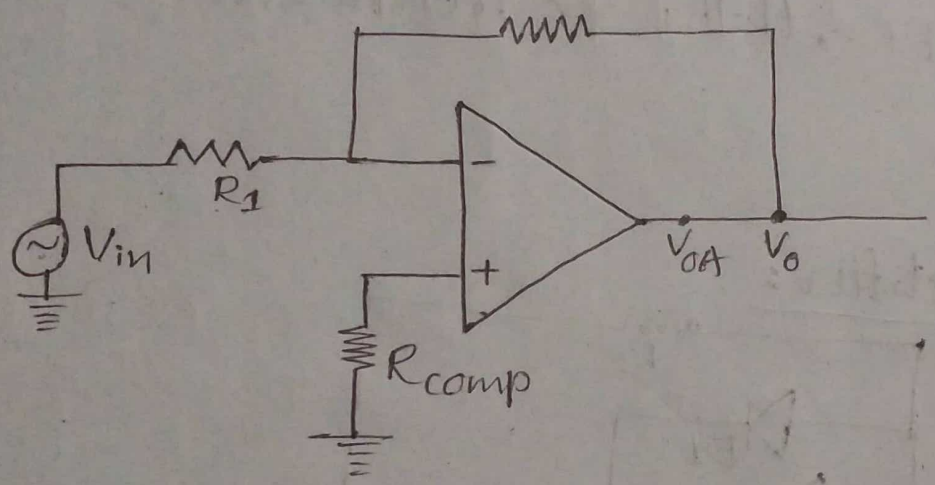

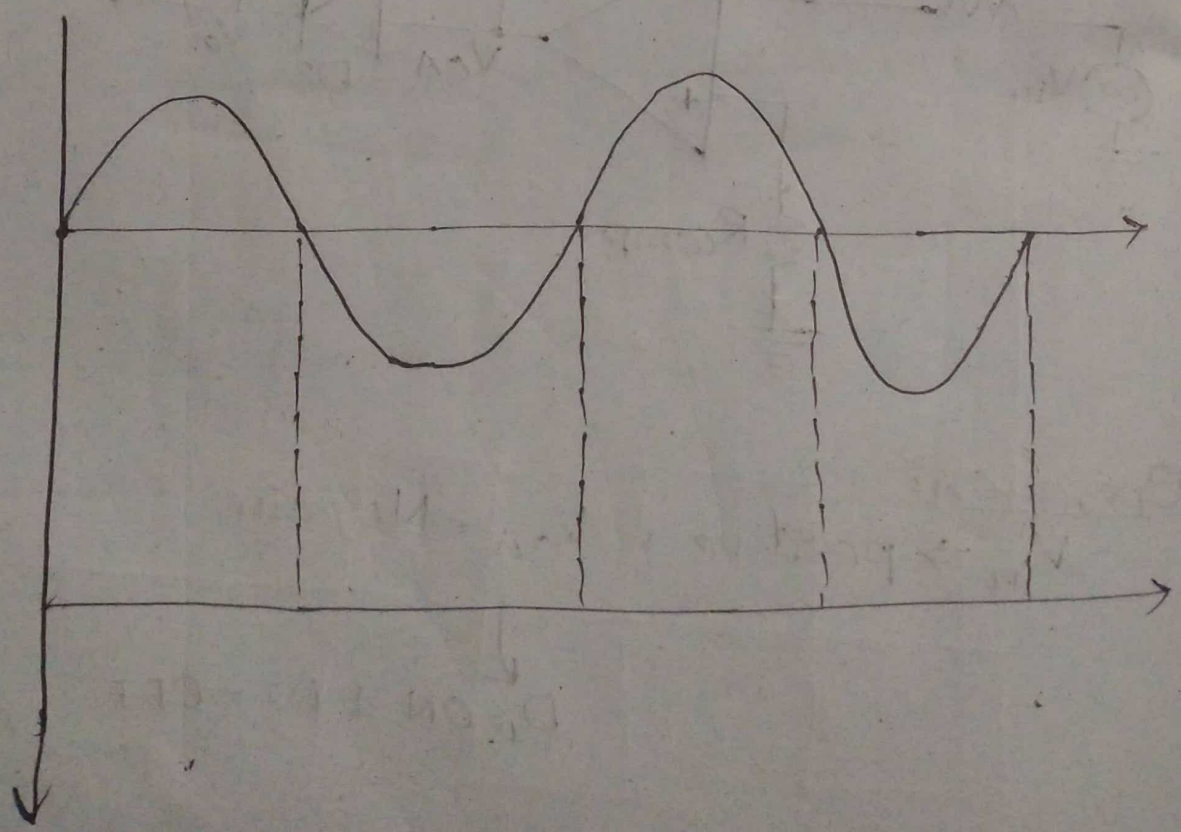

Precision Full Wave Rectifier:

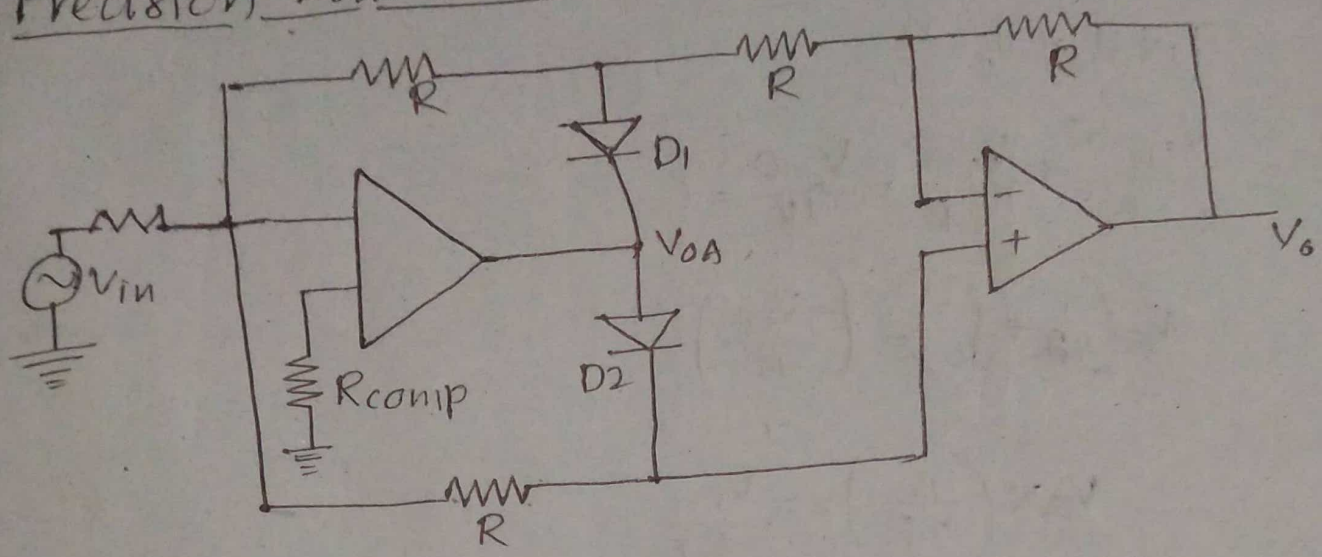

Operation:

V_{in} = positive $\Rightarrow$ V_{OA} = Negative

D1 = ON & D2 = OFF

During positive half cycle,

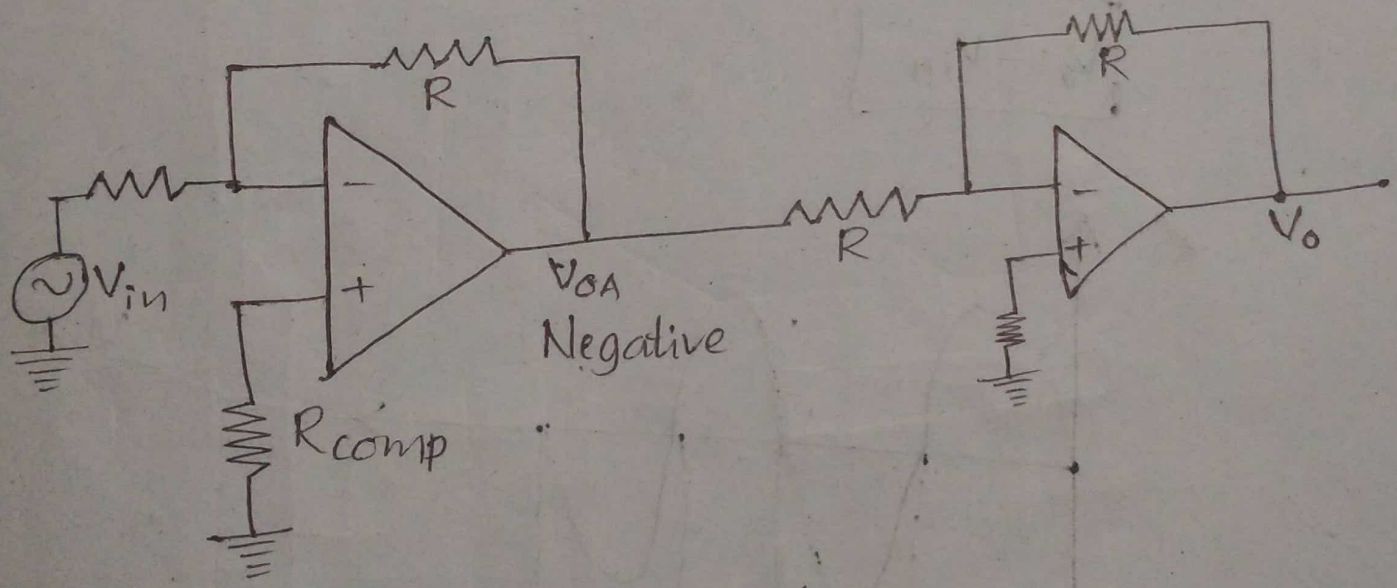

During Negative half cycle,

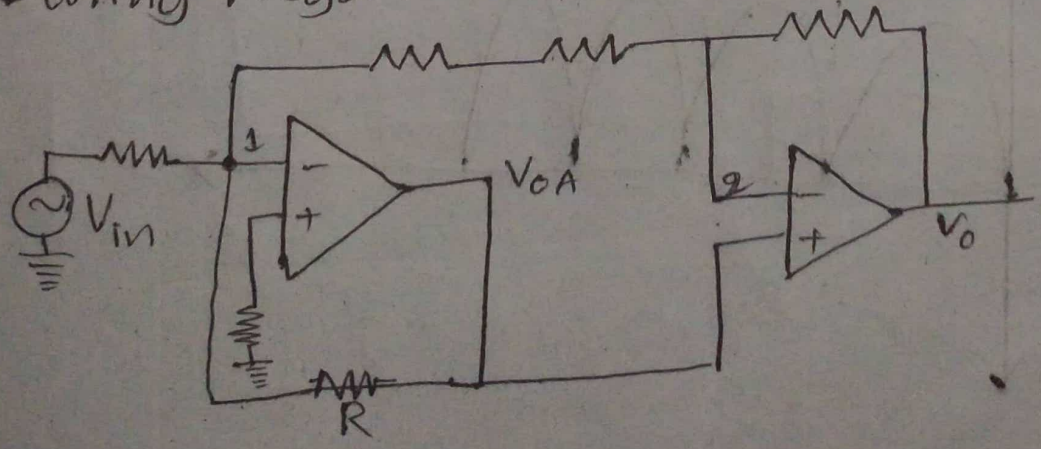

At Node 1,

$$I_1 + I_2 + I_3 = 0$$

$$\frac{V_{in} - 0}{R} + \frac{V_a - 0}{2R} + \frac{V_n - 0}{1V} = 0$$

$$V_a\left(\frac{1}{2R} + \frac{1}{R}\right) = \left(\frac{-V_{in}}{R}\right)$$

$$V_a \times \left(\frac{3}{2R}\right) = -\frac{V_{in}}{R_f}$$

$$V_a = -\frac{2}{3} V_{in}$$

$$V_o = \left(1 + \frac{R_f}{R_1}\right) V_a$$

$$V_o = \left(1 + \frac{R}{2R}\right)\left(-\frac{2}{3} V_{in}\right)$$

$$\boxed{V_o = -V_{in}}$$

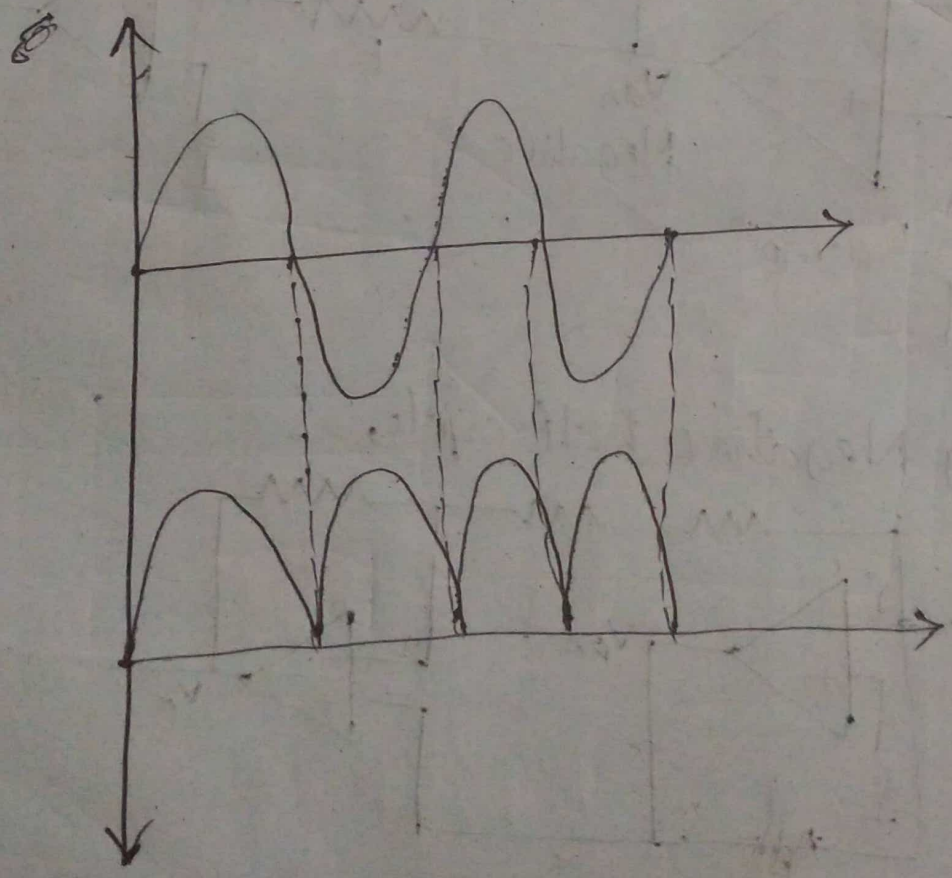

Dt: 12/04

555 Timer:

→ 3 5KΩ resistors are used in the internal block diag

→ 8 pin IC.

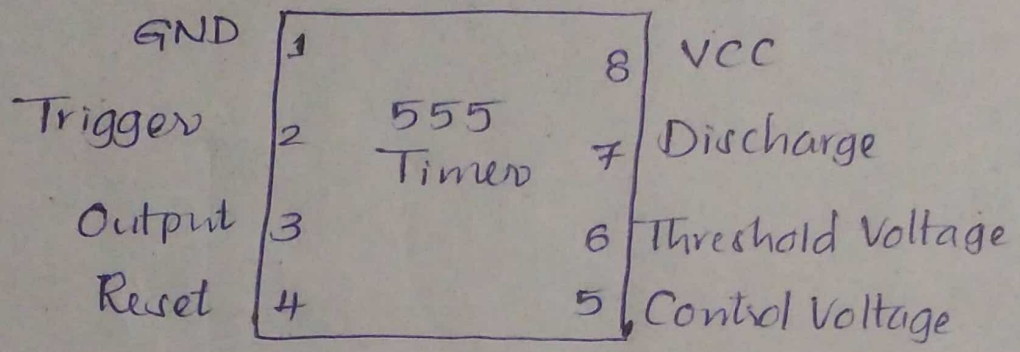

→ These 5KΩ resistors are acting as Potential divider circuit.

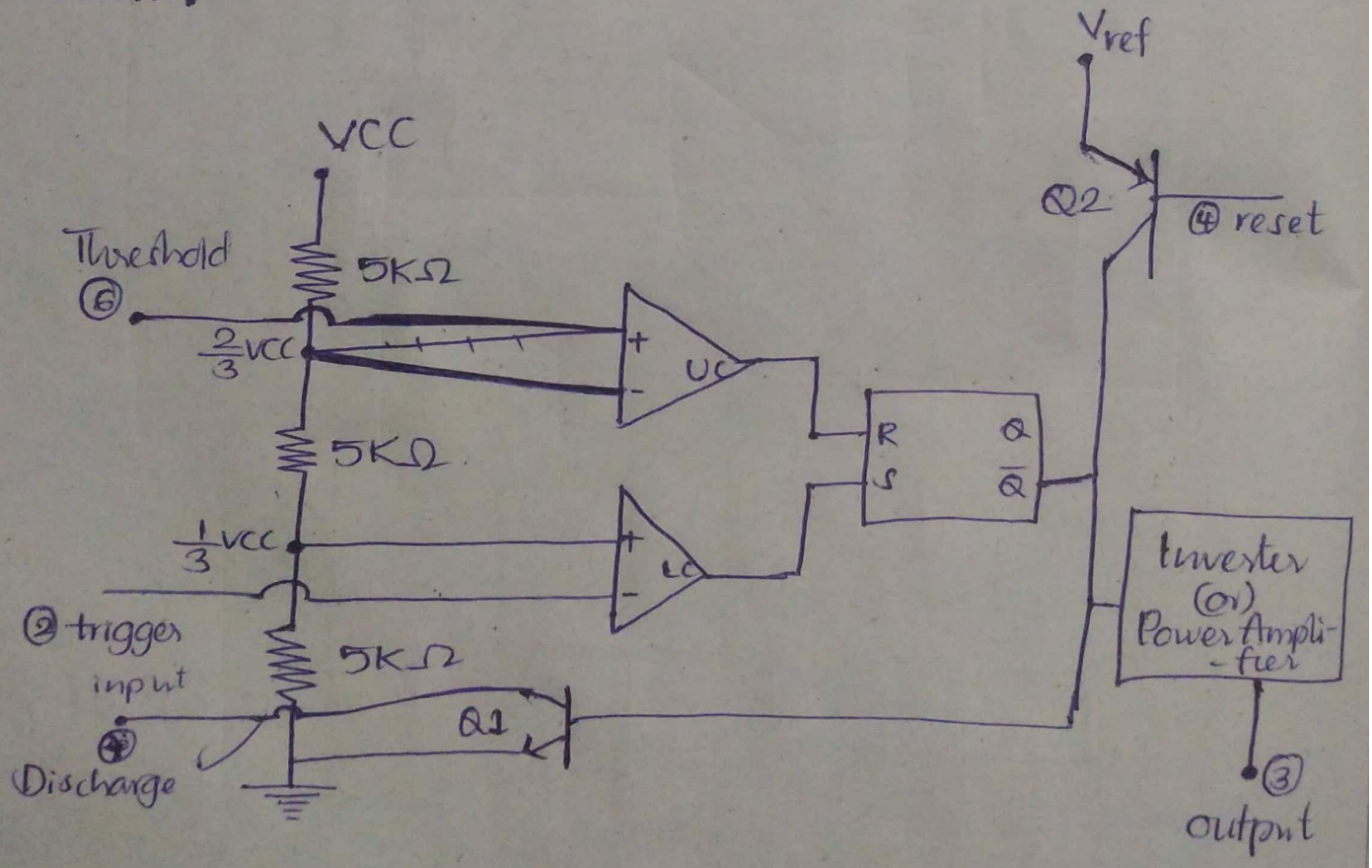

Internal Block Diagram

Conditions:

① SR Flip-Flop

S	R	Q_{n+1}
0	0	$\rightarrow Q_n$
0	1	$\rightarrow 0$
1	0	$\rightarrow 1$
1	1	$\rightarrow$ Undefine

② UC ⇒ ON
if ⑥ ≥ 2/3 VCC

③ LC ⇒ ON
⇓
if ② < 1/3 VCC

→ As long as, Trigger input(②) is lesser than 1/3 VCC then, Lower Comparator turns ON

$\bar{Q} = 0 \Leftarrow Q = 1 \Leftarrow$ set (S) = 1

Q1 = OFF

output = 1

Discharge pin disconnected from Ground.

→ As long as, Threshold voltage (⑥) greater than $\frac{2}{3}$ VCC, then UC turns ON ⇒ R = 1
⇓
$\bar{Q} = 1 \Leftarrow Q = 0$

Q_1 = ON

output = 0

Discharge pin is connected to ground
⇓
whatever be the voltage present at discharge pin will become zero instantly.

Mono Stable Multi Vibrator:

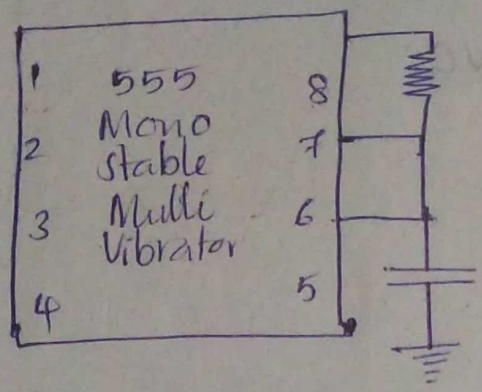

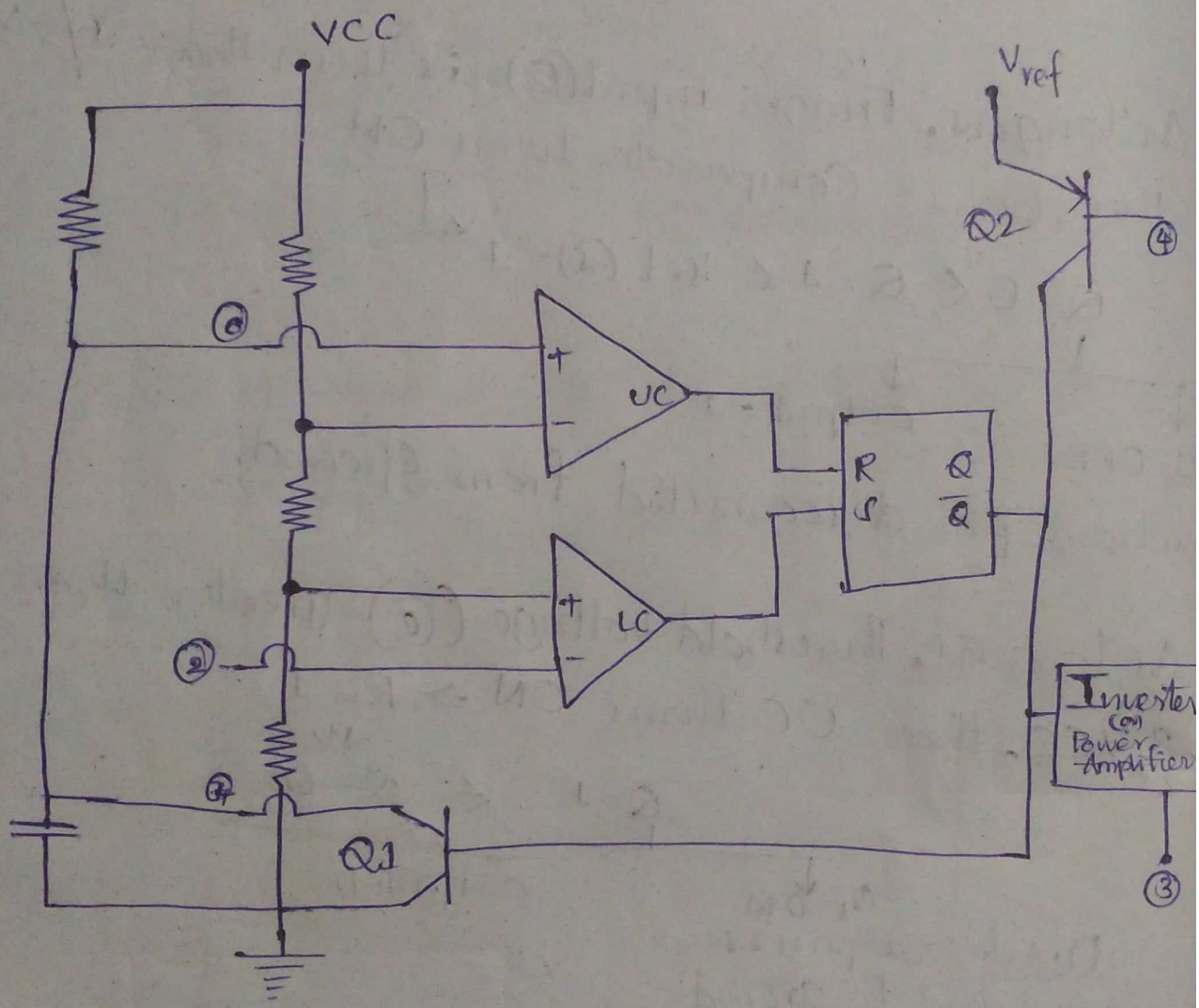

→ As long as, Trigger input ② < $\frac{1}{3}$ VCC ⇒ LC = ON

⇓

Set (S) = 1

$\bar{Q} = 0$ ⇐ Q = 1 ⇐

Q_1 = OFF

(Discharge pin is disconnected from ground

output = 1

→ As long as, threshold voltage → $\frac{2}{3}$ VCC ⇒ UC = ON

⇓

R = 1

$\bar{Q} = 1$ ← Q = 0

Q_1 = ON

Output = 0

Discharge pin is connected to ground ⇒ voltage at discharge pin will become zero instantly

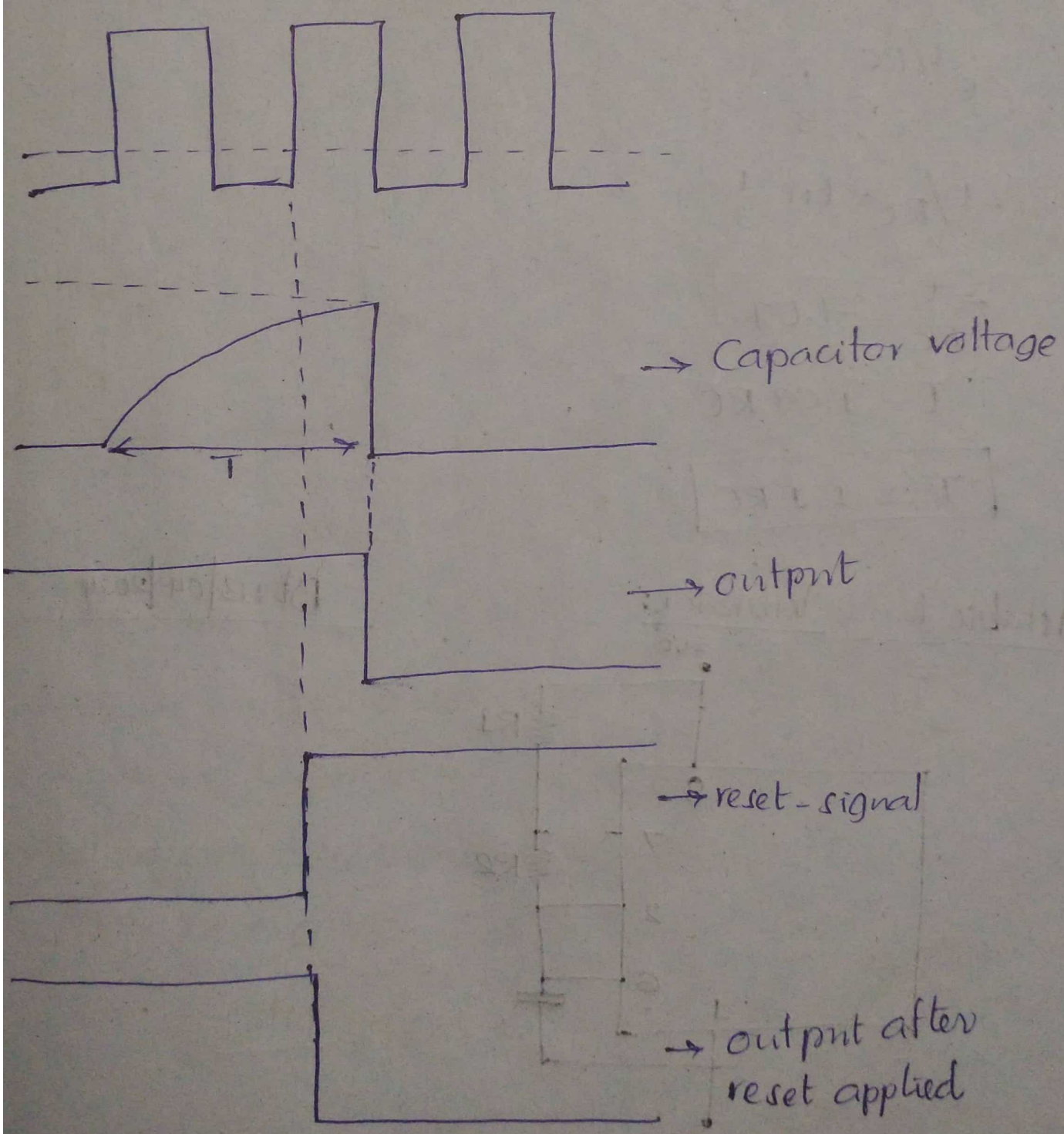

$$V_C = V_{final} + (V_{initial} - V_{final})e^{-t/RC}$$

$$\frac{2}{3}VCC = VCC + (0 - VCC)e^{-t/RC}$$

$$\frac{2}{3}VCC = VCC(1 - e^{-t/RC})$$

$$e^{-t/RC} = 1 - \frac{2}{3}$$

$$e^{-t/RC} = \frac{1}{3}$$

$$-t/RC = \ln\frac{1}{3}$$

$$-\frac{t}{RC} = -1.09$$

$$t = 1.09\,RC$$

$$\boxed{T \simeq 1.1\,RC}$$

Astable Multi Vibrator:

Dt: 13/04/2024

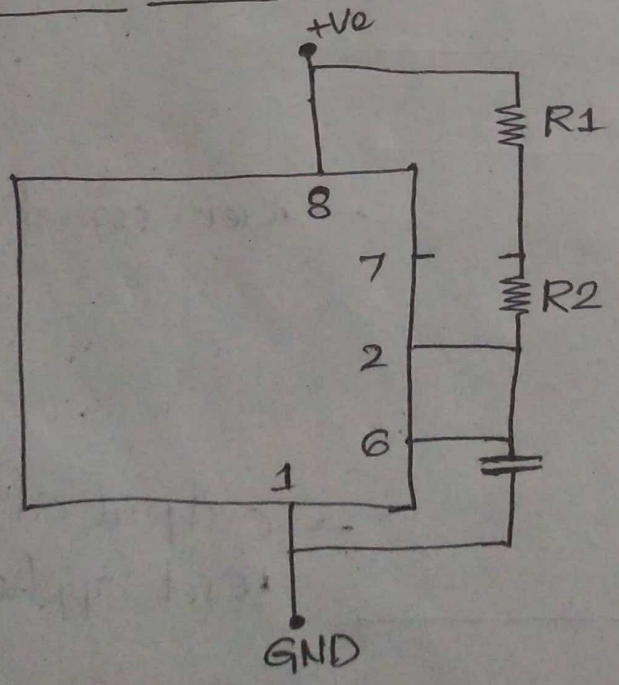

Circuit Diagram:

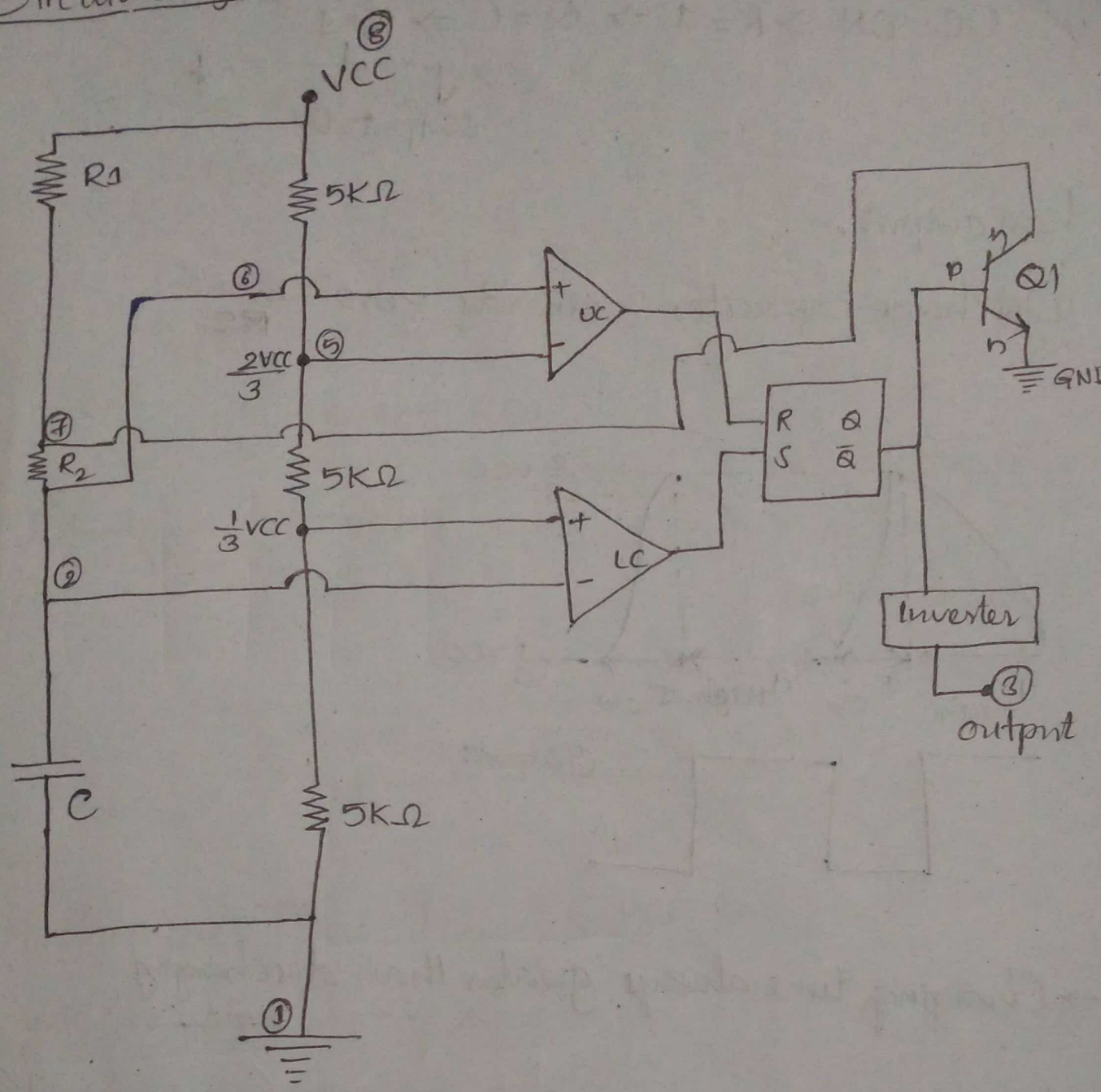

→ Astable multivibrator is also called as Free Running Oscillator.

→ Let us consider, capacitor voltage be '0'.

then, LC ⇒ ON ⇒ S = 1 ⇒ Q = 1 ⇒ $\bar{Q} = 0$

High output ← { Q1 = OFF Output = 1

Capacitor is charging slowly towards VCC through R1 & R2.

✓ UC = ON ⇒ R = 1 ⇒ Q = 0 ⇒ $\bar{Q}$ = 1

output = 0

low output.

Discharge capacitor towards zero through R2

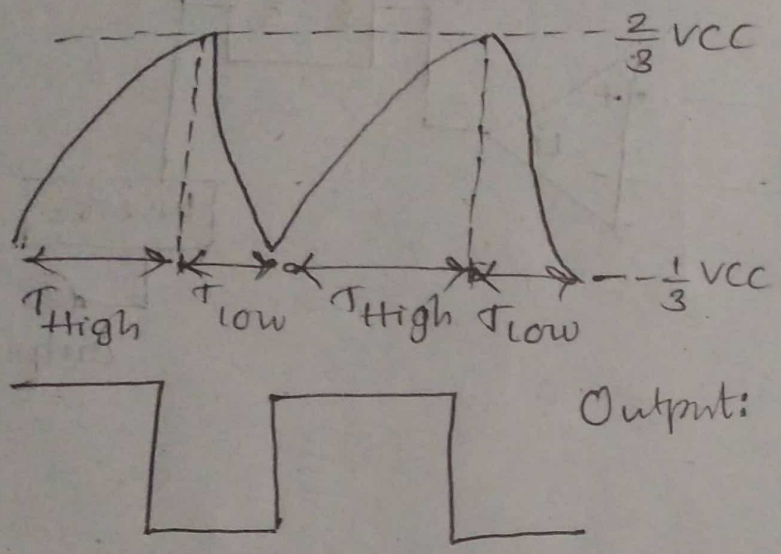

→ Charging time always greater than discharging time.

$t_a \Rightarrow 0$ to $\frac{2}{3}VCC$

$$VCC(t) = V_{final} + (V_{initial} - V_{final})e^{-t/RC}$$

$$\frac{2}{3}VCC = VCC + (0 - VCC)e^{-t/RC}$$

$$\frac{2}{3}\cancel{VCC} = \cancel{VCC}(1 - e^{-t/RC})$$

$$\Rightarrow t_a = 1.09RC = 1.09(R1+R2)C \quad \text{—— (1)}$$

$t_b \Rightarrow 0$ to $\frac{1}{3}VCC$

$$VCC = V_f + (V_i - V_f)e^{-t/RC}$$

$$\frac{1}{3}VCC = VCC + (0 - VCC)e^{-t/RC}$$

$$\frac{1}{3}\cancel{VCC} = \cancel{VCC}\left(1 - e^{-t/RC}\right)$$

$$\Rightarrow e^{-t/RC} = \frac{2}{3}$$

$$-t_b/RC = -0.405$$

$$t_b = 0.405\ RC$$

$t_a - t_b$ Charging Time $T_{High} = t_a - t_b$

$$= 1.09RC - 0.405RC$$

$$= 0.69\ RC$$

$$\boxed{T_{High} = 0.69(R_1 + R_2)C}$$

Discharging Time, T_{low} $\frac{2}{3}VCC$ to $\frac{1}{3}VCC$

$$VCC(t) = V_f + (V_i - V_f)e^{-t/RC}$$

$$\frac{1}{3}VCC = 0 + \left(\frac{2}{3}VCC - 0\right)e^{-t/RC}$$

$$\frac{1}{3}\cancel{VCC} = \frac{2}{3}\cancel{VCC}\left(e^{-t/RC}\right)$$

$$\Rightarrow T_{LOW} = 0.69\ RC$$

$$= 0.69\ R_2C$$

(discharging time)

Total Time $(T) = T_{High} + T_{low}$

$$= 0.69(R_1 + R_2)C + 0.69\ R_2C$$

$$T = 0.69\ (R_1 + 2R_2)C$$

$$f = \frac{1}{T} = \frac{1}{0.69(R_1+2R_2)C} = \frac{1.45}{(R_1+2R_2)C}$$

$$\text{Duty Cycle} = \frac{T_{low}}{T_{total}} = \frac{0.69\,R_2\,C}{0.69\,(R_1+2R_2)C} = \frac{R_2}{R_1+2R_2}$$

Analog to Digital Converters
Digital to Analog Converters

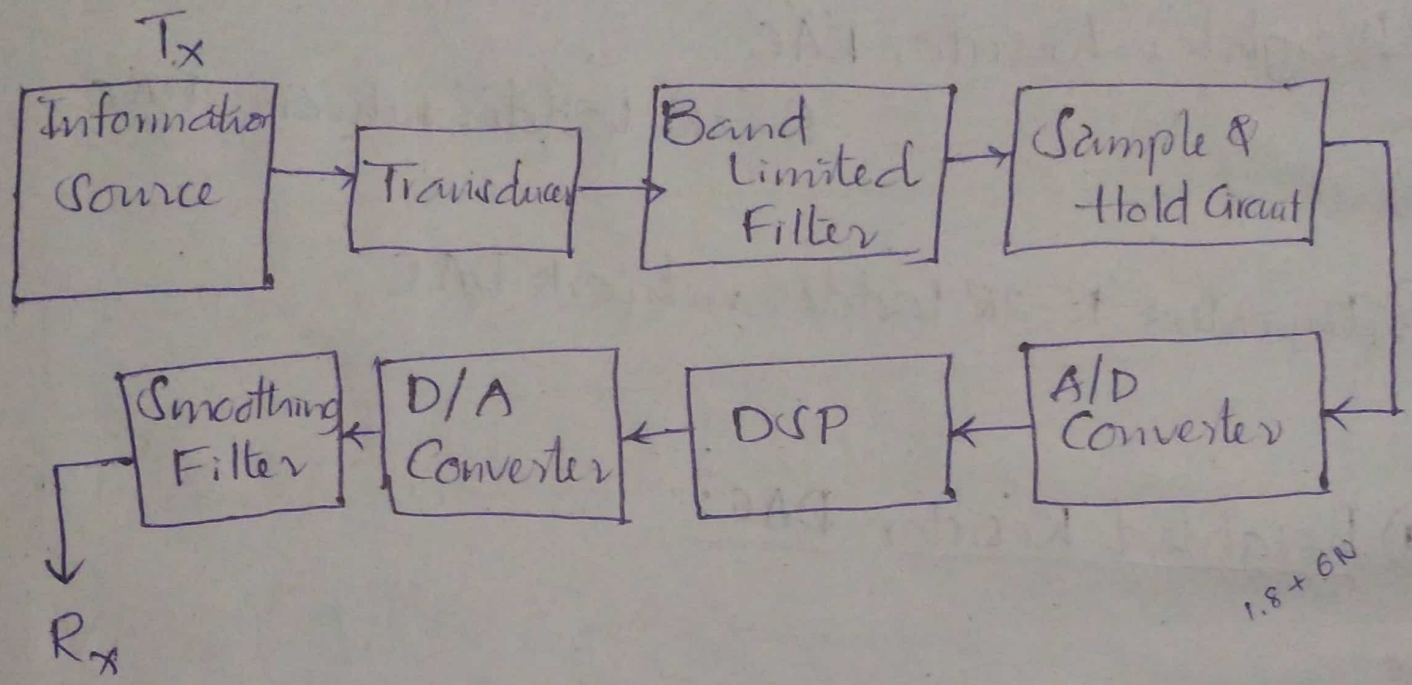

1.8 + 6N

Basics of D to A Converter:

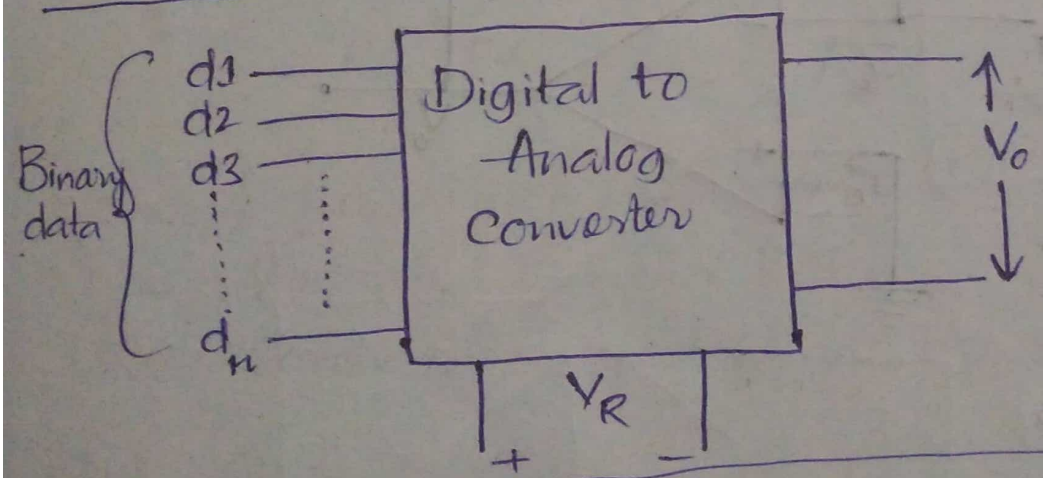

$$V_o = K.V_{FS}\left(d_1 2^{-1} + d_2 2^{-2} + \ldots + d_n 2^{-n}\right)$$

where, d_1 = MSB bit with weight of $\frac{V_{FS}}{2}$

V_{FS} = Full scale output voltage

d_n = LSB with a weight of $\frac{V_{FS}}{2^{-n}}$

K = scaling factor, generally, it is unity

→ There are 3 types of DAC

1) Weighter Resistor DAC

2) R-2R ladder network DAC

3) Inverted R-2R ladder network DAC

1) Weighted Resistor DAC:

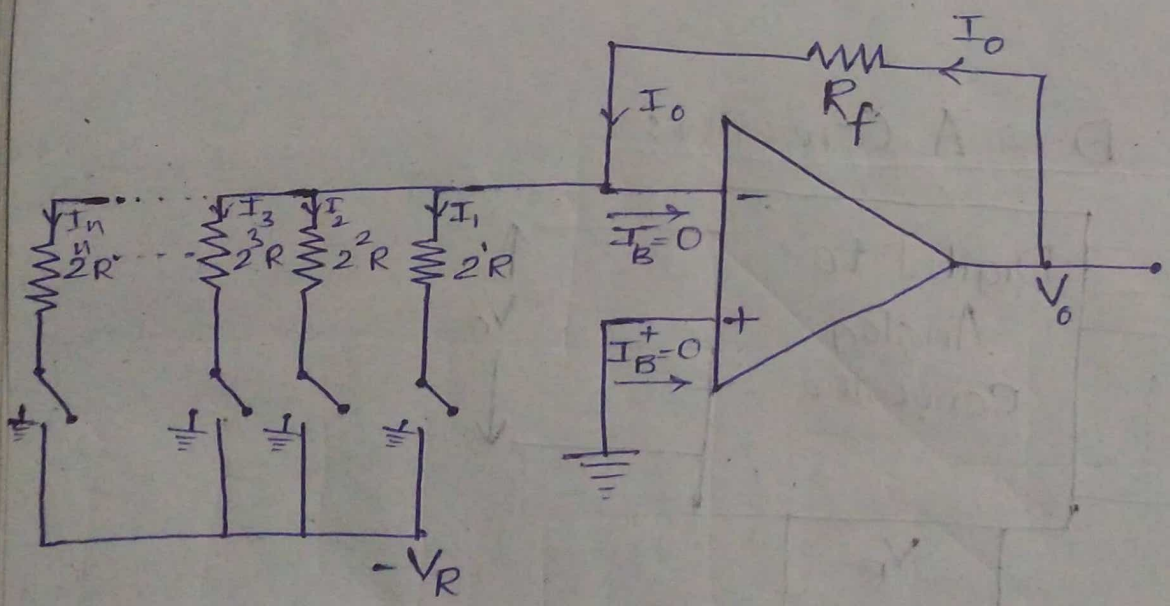

At Inverting Terminal,

$$\frac{V_o - 0}{R_f} = I_o$$

$$\boxed{V_o = I_o R_f} \quad \text{--- (1)}$$

$$\Rightarrow I_o = I_1 + I_2 + I_3 + \ldots + I_n$$

$$\frac{V_o}{R_f} = \frac{0-(-V_R)}{2^1 R} d_1 + \frac{0-(-V_R)}{2^2 R} d_2 + \ldots + \frac{0-(-V_R)}{2^n R} d_n$$

$$\frac{V_o}{R_f} = \frac{V_R d_1}{2^1 R} + \frac{V_R d_2}{4R} + \frac{V_R d_3}{8R} + \ldots \frac{V_R}{2^n R} d_n$$

$$\boxed{V_o = V_R \times \frac{R_f}{R} \left[d_1 2^{-1} + d_2 2^{-2} + d_3 2^{-3} + \ldots + d_n 2^{-n} \right]}$$

If R_f and R are equal.

$$V_o = V_R \left(d_1 2^{-1} + d_2 2^{-2} + d_3 2^{-3} + \ldots + d_n 2^{-n} \right) \quad \text{--- (1)}$$

Compare (1) with standard equation.

$$\therefore V_R = V_{FS}$$

Q:
Convert the digital information (1011) into analog form using Weighted Resistor DAC.
(Note: Consider R_f and R are equal.)

Soln: Given that $\Rightarrow$ 1 0 1 1
d_1 d_2 d_3 d_4

$$R_f = R$$

$$V_o = V_R \cdot \frac{R_f}{R}\left(d_1 2^{-1} + d_2 2^{-2} + \dots + d_n 2^{-n}\right)$$

$$= V_R \cdot 1\left(1.2^{-1} + 0.2^{-2} + 1.2^{-3} + 1.2^{-4}\right)$$

$$= V_R\left[\frac{1}{2} + 0 + \frac{1}{8} + \frac{1}{16}\right)$$

$$= V_R\left(\frac{8+2+1}{16}\right)$$

$$V_o = \frac{11 V_R}{16}$$

$$\boxed{V_o = \frac{11 V_R}{16}}$$

V_R = Full scale output voltage

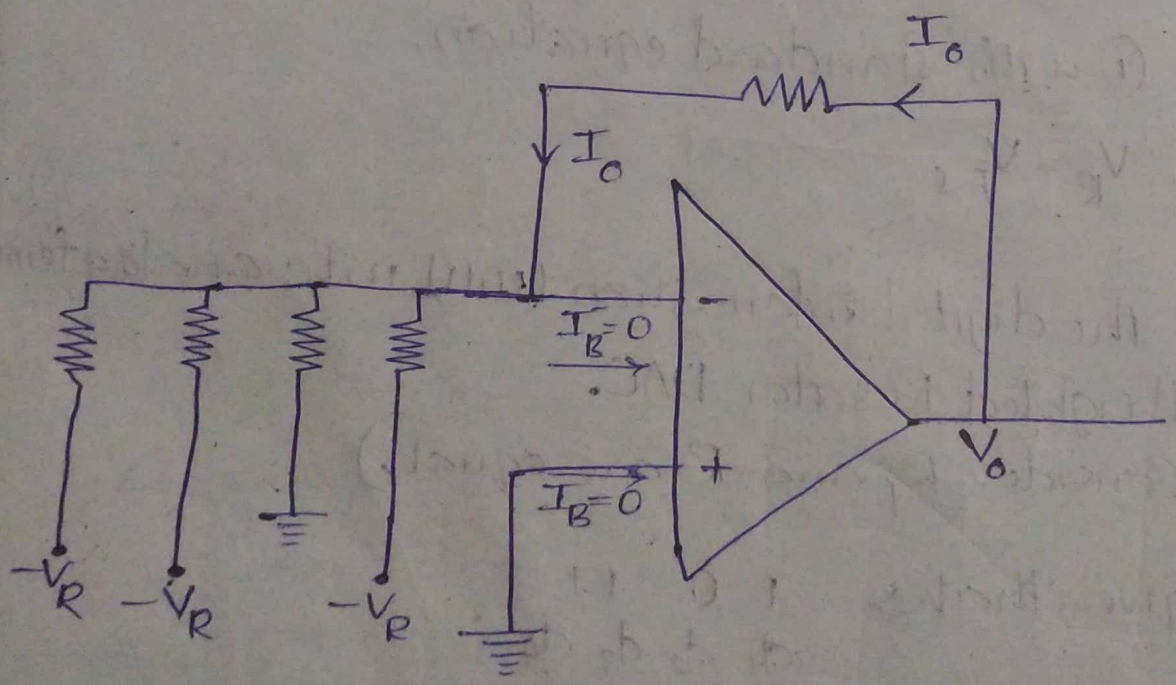

$$I_0 = I_1 + I_2 + I_3 + I_4$$

$$\frac{V_0}{R_f} = \frac{0-(-V_R)}{2^1 R} + 0 + \frac{0-(-V_R)}{2^3 R} + \frac{0-(-V_R)}{2^4 R}$$

$$\frac{V_0}{R_f} = \frac{V_R}{2R} + \frac{V_R}{8R} + \frac{V_R}{16R}$$

$$\frac{V_0}{\cancel{R_f}} = \frac{V_R}{\cancel{R}}\left[\frac{1}{2} + \frac{1}{8} + \frac{1}{16}\right]$$

$$\boxed{V_0 = \frac{11}{16} V_R}$$

Q:

$V_{FS} = 15\ V$

(1)

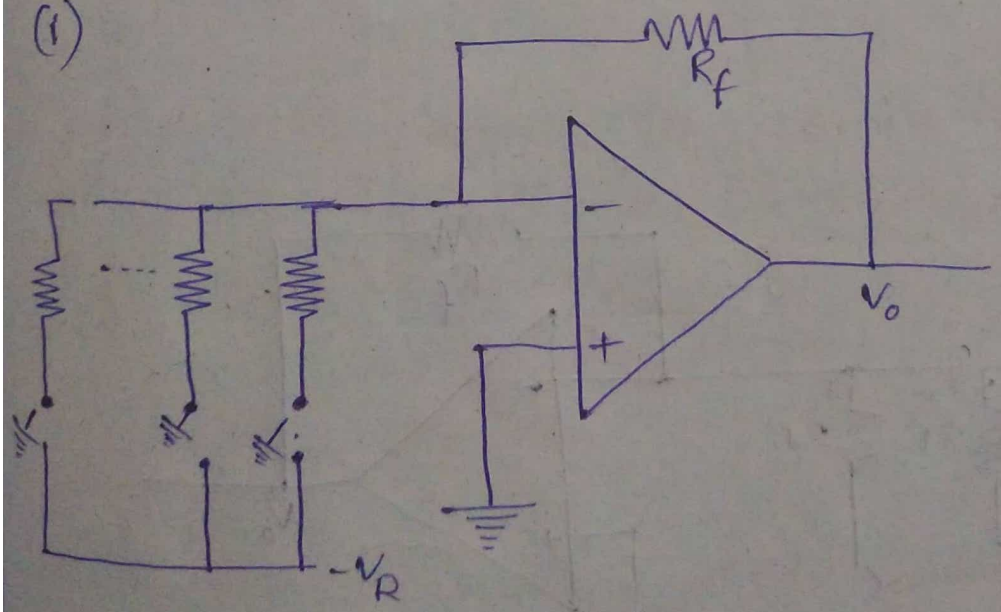

$$\frac{V_o - 0}{R_f} = I_o$$

$$\boxed{V_o = I_o R_f} \quad (1)$$

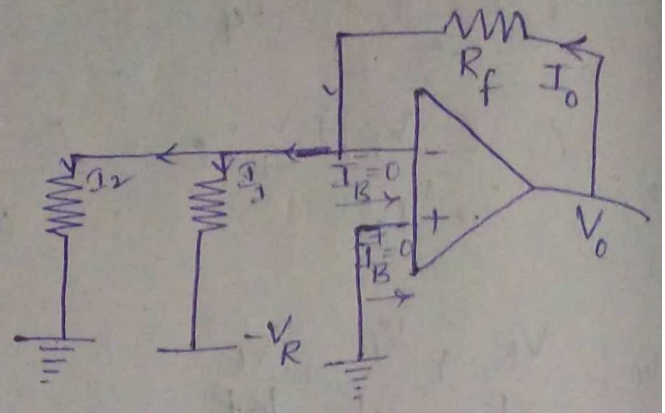

$$I_o = I_1 + I_2$$

$$= \frac{0-(-V_R)}{2R} + \frac{0-0}{4R}$$

$$I_o = \frac{V_R}{2R}$$

$$V_o = R_f I_o$$

$$= \frac{R_f}{R}\left(\frac{V_R}{2}\right)$$

If $R_f = R$;

$$V_o = \frac{V_R}{2}$$

$$V_o = \frac{15}{2}$$

$$\boxed{V_o = 7.5\,V}$$

(ii)

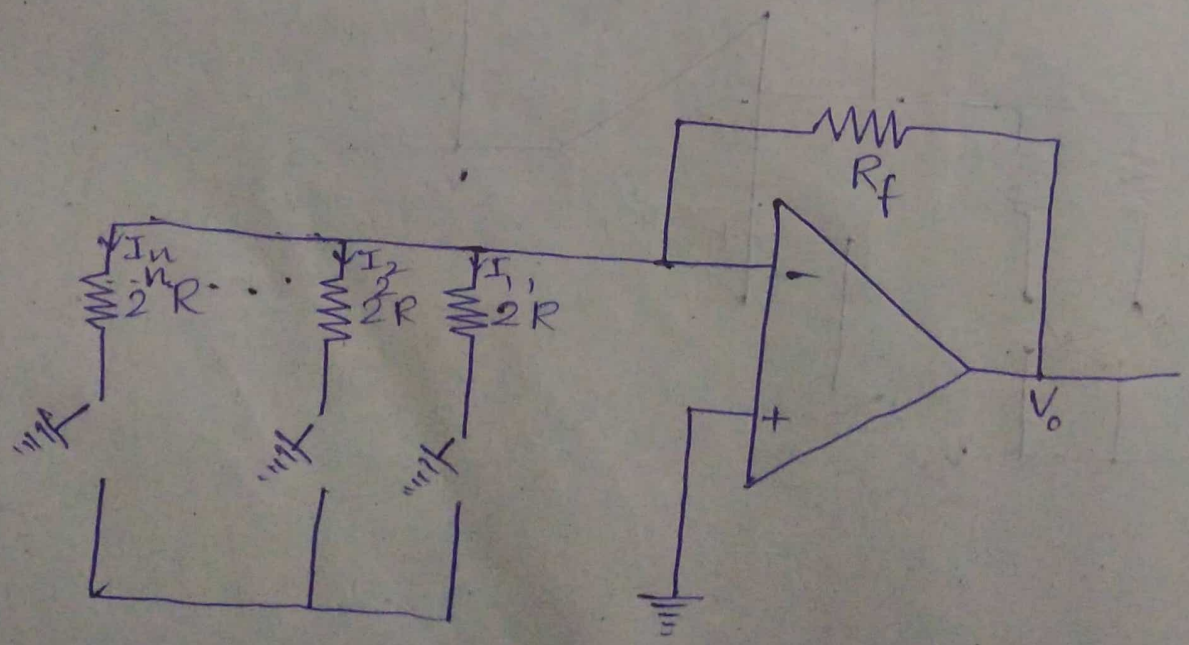

Given ⇒ 1100

$d_1 = 1$ (MSB)

$d_2 = 1$

$d_3 = 0$

$d_4 = 0$ (LSB)

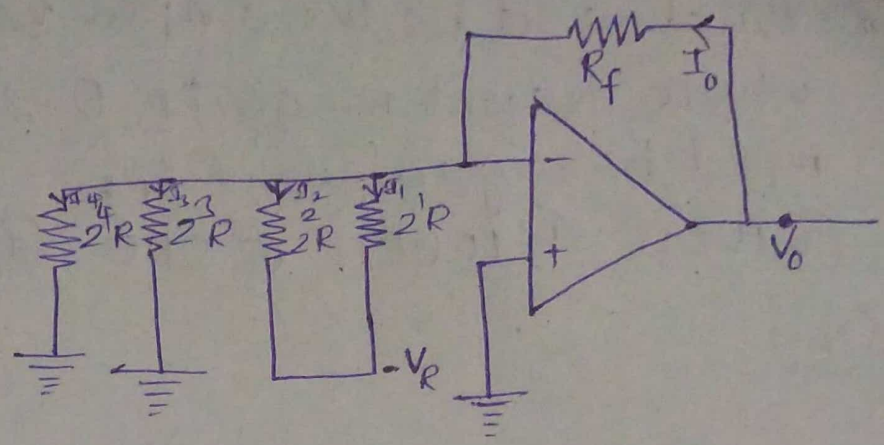

$$I_0 = I_1 + I_2 + I_3 + I_4$$

$$= \frac{0-(-V_R)}{2R} + \frac{0-(-V_R)}{4R} + 0 + 0$$

$$= \frac{V_R}{2R} + \frac{V_R}{4R}$$

$$V_0 = R_f\left(\frac{2V_R + V_R}{4R}\right)$$

If $R_f = R_1$

$$V_0 = \frac{3V_R}{4}$$

$$V_0 = \frac{3}{4} \times 15$$

$$\boxed{V_0 = 11.25\,V}$$

Q: Calculate the values of LSB, MSB and full scale output voltage for a 8-bit DAC, for 0-10 Volts range.

Solu: $LSB = \frac{V_R}{2^n} = \frac{V_R}{2^8} = \frac{10}{256}$

$$MSB = \frac{V_R}{2} = \frac{10}{2} = 5$$

The max. o/p voltage = Full scale voltage − LSB

$$= V_R - \frac{V_R}{2^8} \simeq 9.96\,V$$

Drawbacks of Weighted DAC:

R-2R Ladder network DAC:

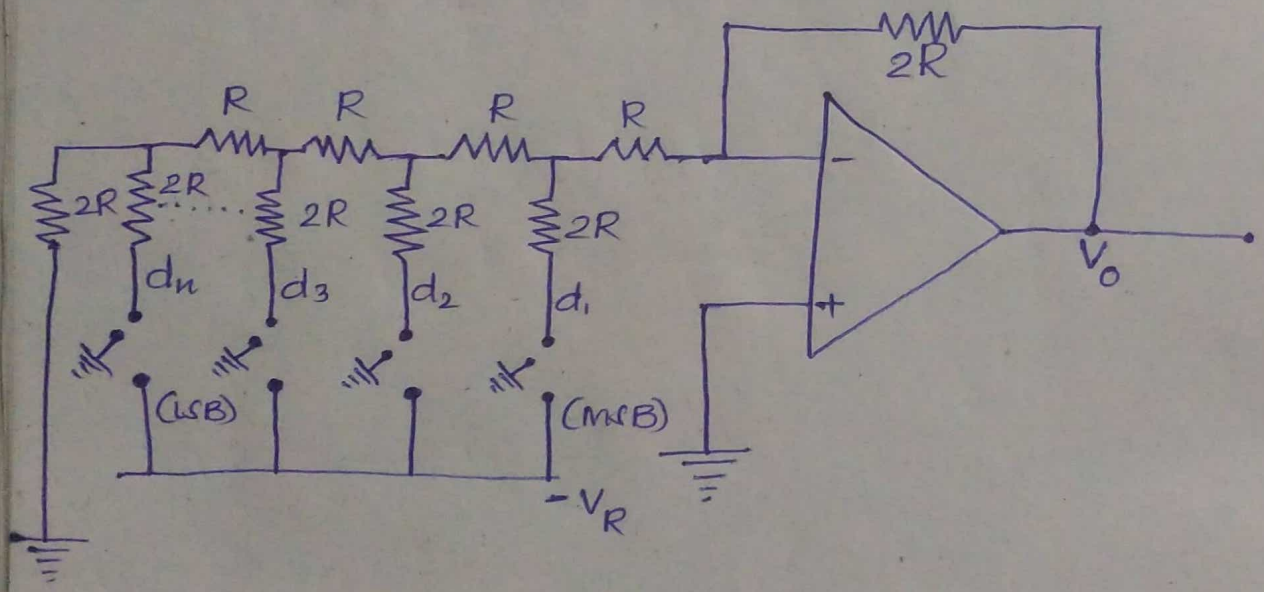

Binary: 1110

$d_1 = 1$ (MSB)

$d_2 = 1$

$d_3 = 1$

$d_4 = 0$ (LSB)

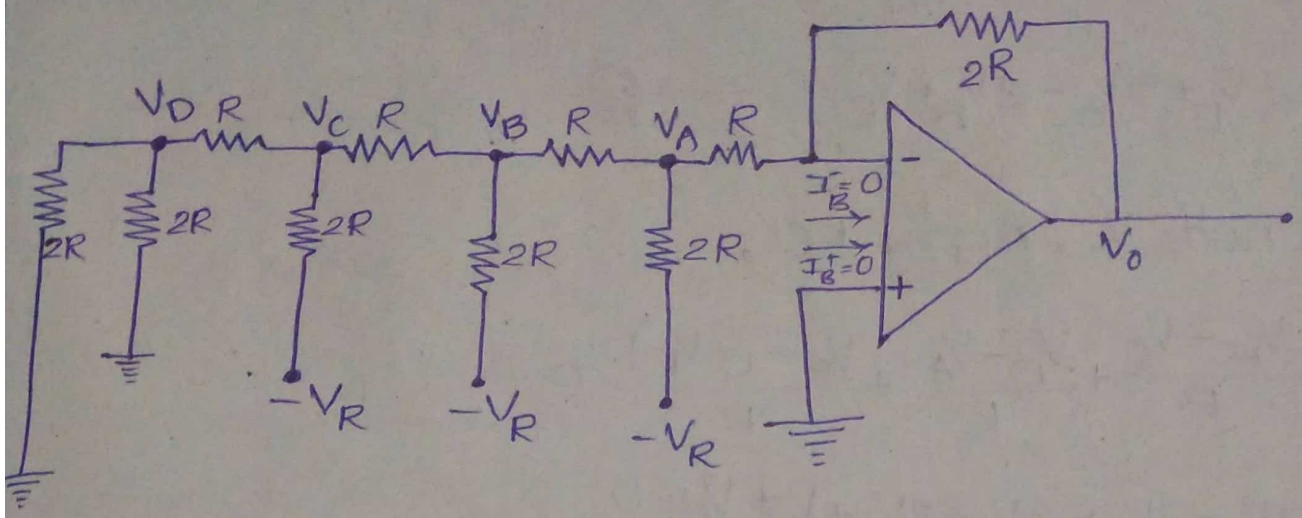

From the Ideal Characteristics of OP-AMP,

Input Impedence $(R_i) = \infty$

Gain $= \infty$

$$\frac{V_o}{V_d} = \infty \Rightarrow V_d = 0$$

$$V_{inv} - V_{non\text{-}inv} = 0$$

$$V_{inverting} = V_{non\text{-}inverting}$$

$$I_o = \frac{0 - V_o}{2R}$$

$$\Rightarrow \boxed{V_o = -I_o \times 2R} \quad \text{— (a)}$$

$$\frac{V_A - 0}{R} = I_o$$

$$\boxed{I_o = \frac{V_A}{R}} \quad \text{— (b)}$$

At node V_D, apply KCL

$$\frac{V_o - 0}{2R} + \frac{V_D - V_C}{R} + \frac{V_D - 0}{2R} = 0$$

$$V_D + 2V_D - 2V_C + V_D = 0$$

$$4V_D = 2V_C \quad \text{— (1)}$$

At node V_C, apply KCL

$$\frac{V_C - V_D}{R} + \frac{V_C - V_B}{R} + \frac{V_C - (-V_R)}{2R} = 0$$

$$2V_C - 2V_D + 2V_C - 2V_B + V_C + V_R = 0$$

$$-2V_D + 5V_C - 2V_B + V_R = 0 \quad \text{--- (2)}$$

At node V_B; apply KCL,

$$\frac{V_B - V_C}{R} + \frac{V_B - V_A}{R} + \frac{V_B - (-V_R)}{2R} = 0$$

$$2V_B - 2V_C + 2V_B - 2V_A + V_B + V_R = 0$$

$$-2V_C + 5V_B - 2V_A + V_R = 0 \quad \text{--- (3)}$$

At node V_A, apply KCL,

$$\frac{V_A - V_B}{R} + \frac{V_A - 0}{R} + \frac{V_A - (-V_R)}{2R} = 0$$

$$2V_A - 2V_B + 2V_A + V_A + V_R = 0$$

$$-2V_B + 5V_A + V_R = 0 \quad \text{--- (4)}$$

From (1),

$$2V_D = V_C \quad \text{--- (5)}$$

Sub (5) in (2)

$$-V_C + 5V_C - 2V_B + V_R = 0$$

$$4V_C - 2V_B + V_R = 0 \Rightarrow 2V_C = \frac{-V_R + 2V_B}{2} \quad \text{--- (6)}$$

Sub (6) in (3)

$$-\left(\frac{-V_R + 2V_B}{2}\right) + 5V_B - 2V_A + V_R = 0$$

$$V_R - 2V_B + 10V_B - 4V_A + 2V_R = 0$$

$$8V_B - 4V_A + 3V_R = 0 \Rightarrow 2V_B = \frac{4V_A - 3V_R}{4} \quad \text{--- (8)}$$

Sub (7) in (4)

$$-\left(\frac{4V_A - 3V_R}{4}\right) + 5V_A + V_R = 0$$

$$-4V_A + 3V_R + 20V_A + 4V_R = 0$$

$$16V_A = -7V_R$$

$$\boxed{V_A = -\frac{7}{16}V_R} \quad -(8)$$

Sub (8), (b) in (a)

$$V_0 = -I_0 \times 2R$$

$$= -\left(\frac{V_A}{\cancel{R}}\right) \times 2\cancel{R}$$

$$= -\left(\frac{-7V_R}{16}\right) \times 2$$

$$\boxed{V_0 = \frac{14V_R}{16}}$$

Q: What would be the output voltage produced by R-2R ladder network DAC, whose o/p range is 0 to 30 V, whose binary:

(i) 1011 (ii) 0111 (iii) 0011 (iv) 011 (v) 101 (vi) 110 (vii) 11 (viii) 01 (ix) 1001.

Soln:

ADC (Analog to Digital Converter):

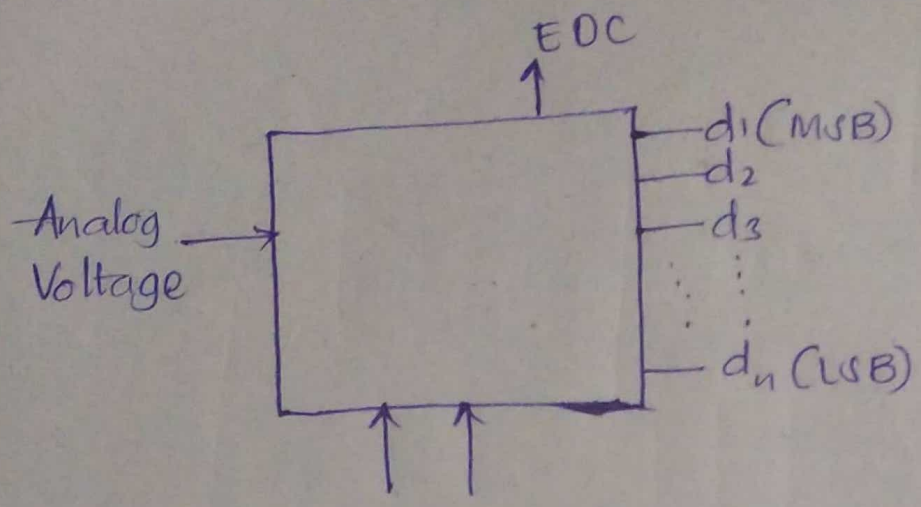

$$D = d_1 2^{-1} + d_2 2^{-2} + d_3 2^{-3} + \ldots\ldots d_n 2^{-n}$$

Types of ADCs

(i) Flash ADC (or) Parallel Comparator ADC:

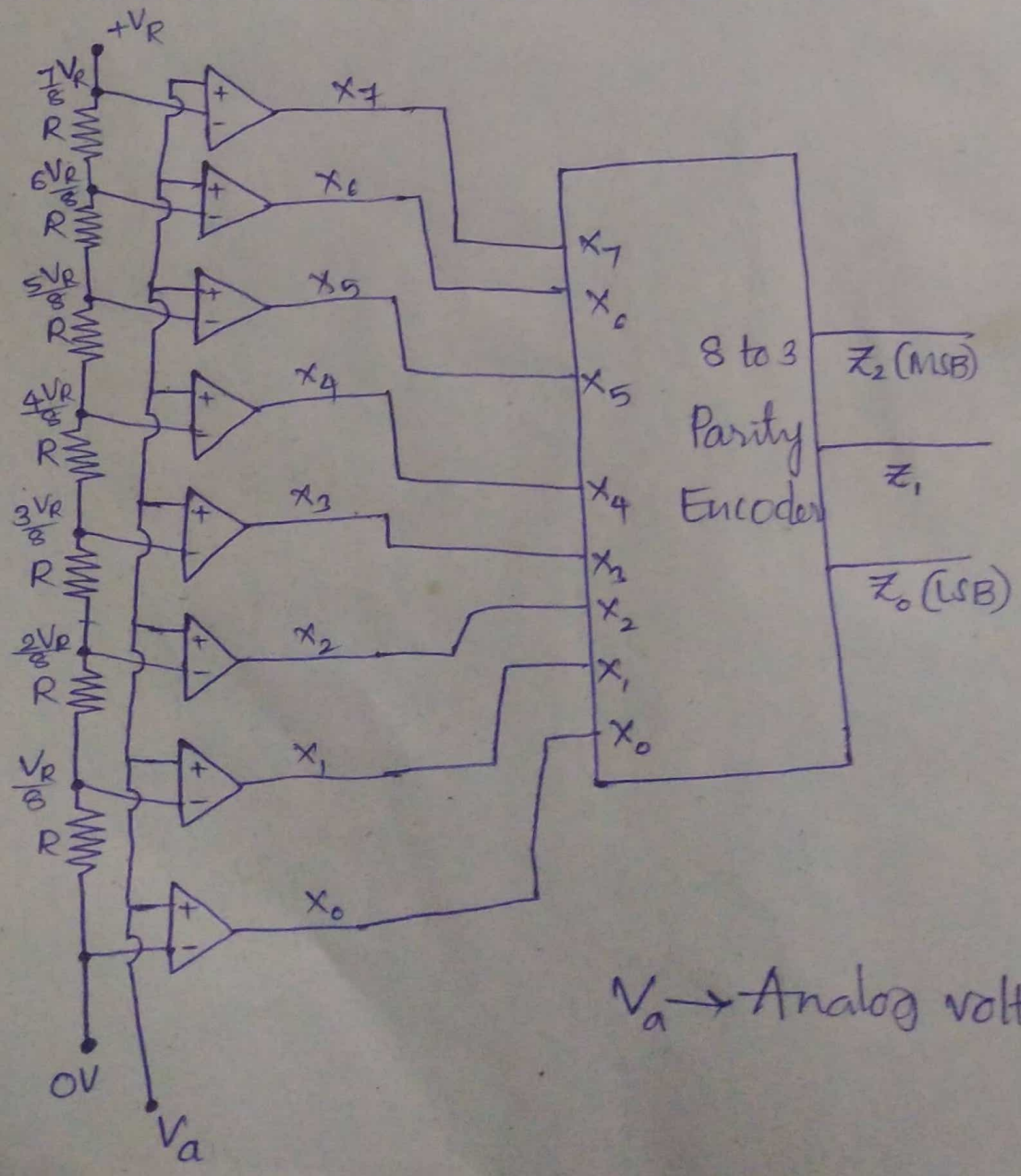

$V_a \rightarrow$ Analog voltage

Operation:

Analog Voltage (V_a)	X_7	X_6	X_5	X_4	X_3	X_2	X_1	X_0	Z_2	Z_1	Z_0
$0 < V_a < \frac{V_R}{8}$	0	0	0	0	0	0	0	1	0	0	0
$\frac{V_R}{8} < V_a < \frac{2V_R}{8}$	0	0	0	0	0	0	1	1	0	0	1
$\frac{2V_R}{8} < V_a < \frac{3V_R}{8}$	0	0	0	0	0	1	1	1	0	1	0
$\frac{3V_R}{8} < V_a < \frac{4V_R}{8}$	0	0	0	0	1	1	1	1	0	1	1
$\frac{4V_R}{8} < V_a < \frac{5V_R}{8}$	0	0	0	1	1	1	1	1	1	0	0
$\frac{5V_R}{8} < V_a < \frac{6V_R}{8}$	0	0	1	1	1	1	1	1	1	0	1
$\frac{6V_R}{8} < V_a < \frac{7V_R}{8}$	0	1	1	1	1	1	1	1	1	1	0
$\frac{7V_R}{8} < V_a < V_R$	1	1	1	1	1	1	1	1	1	1	1

SAR ADC (Successive Approximation ADC)

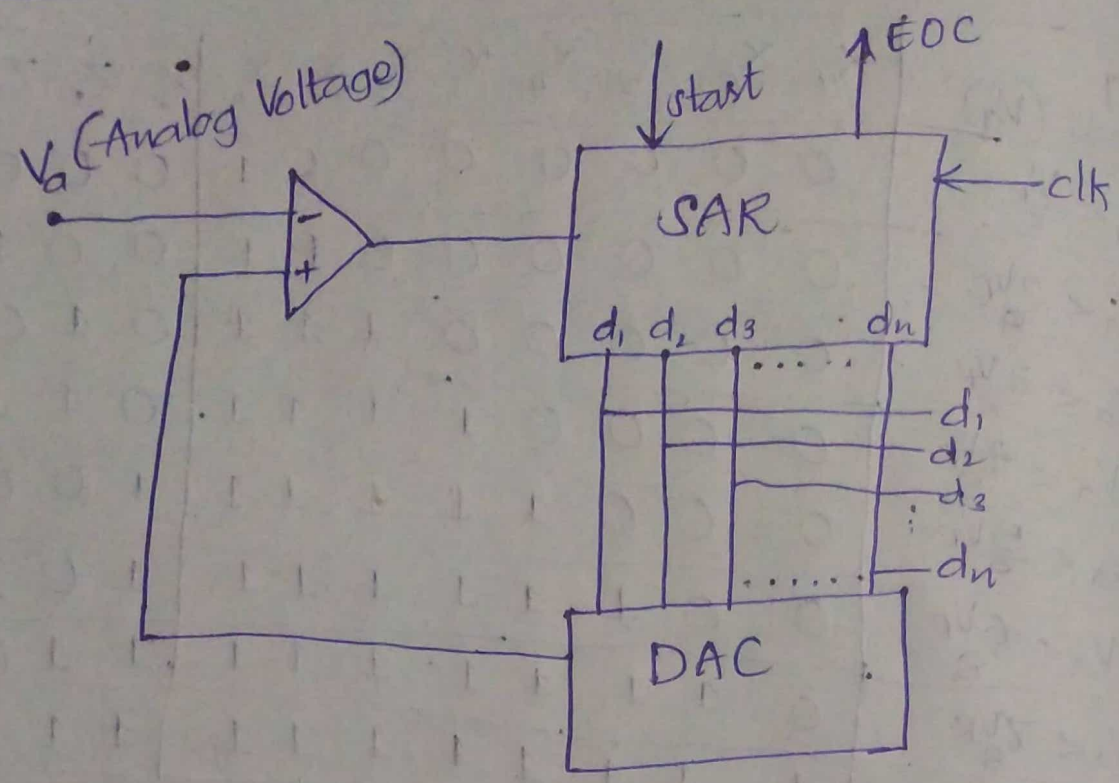

Operation:

Start : 1 (High)

d_1	d_2	d_3	d_4	DAC o/p	Comparator
1	0	0	0	$\frac{8V_R}{16} = \frac{V_R}{2}$	1
1	1	0	0	$\frac{12V_R}{16} = \frac{3}{4}V_R$	1
1	1	1	0	$\frac{14V_R}{16}$	1
1	1	1	1	$\frac{15V_R}{16}$	0

1110