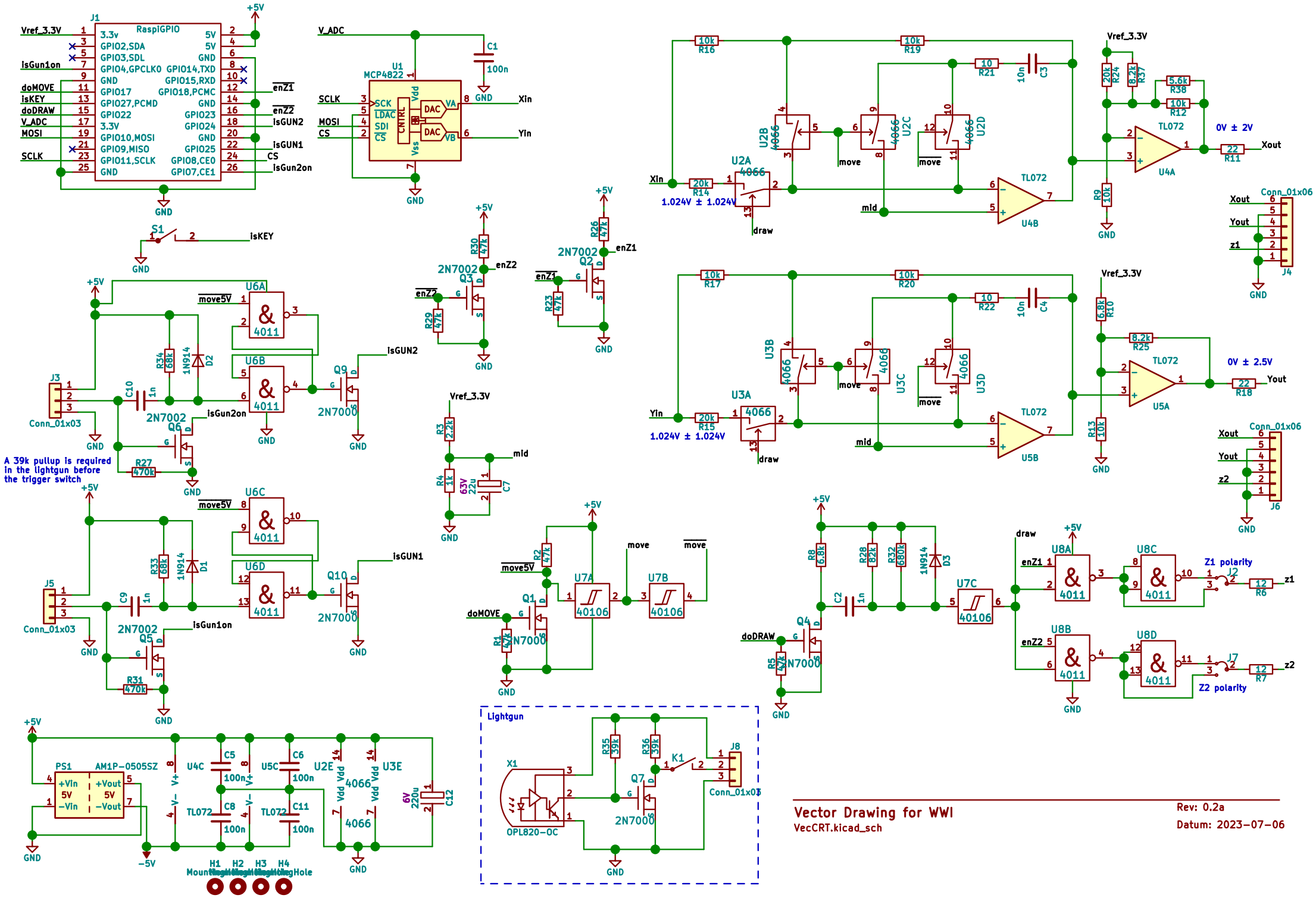
J1
RaspiGPIO
Vref_3.3V
isGun1on
doMOVE
isKEY
doDRAW
V_ADC
MOSI
SCLK
enZ1
enZ2
isGUN2
isGUN1
CS
isGun2on
+5V
GND
U1
MCP4822
SCK
LDAC
SDI
CS
CNTRL
DAC
VA
VB
Vdd
Vss
C1
100n
Xin
Yin
S1
isKEY
U6A
U6B
U6C
U6D
4011
move5V
R34
68k
1N914
D2
C10
1n
J3
Conn_01x03
2N7002
Q6
R27
470k
Q9
2N7000
A 39k pullup is required
in the lightgun before
the trigger switch
R33
68k
D1
C9
J5
Q5
R31
470k
Q10
R30
47k
Q3
R29
47k
R26
47k
Q2
R23
47k
R3
2.2k
R4
1k
63V
22u
C7
mid
U2A
U2B
U2C
U2D
4066
move
draw
R16
10k
R19
10k
R14
20k
1.024V ± 1.024V
R21
10
C3
10n
U4B
TL072
R9
10k
R24
20k
R37
8.2k
R38
5.6k
R12
10k
U4A
0V ± 2V
R11
22
Xout
Conn_01x06
Yout
z1
J4
U3A
U3B
U3C
U3D
R17
10k
R20
10k
R15
20k
1.024V ± 1.024V
R22
10
C4
10n
U5B
R10
6.8k
R25
8.2k
U5A
0V ± 2.5V
R18
22
R13
10k
z2
J6
U7A
U7B
U7C
40106
R2
47k
Q1
R1
47k
R8
6.8k
R28
82k
R32
680k
D3
C2
Q4
R5
47k
U8A
U8B
U8C
U8D
Z1 polarity
Z2 polarity
J2
J7
R6
12
R7
12
PS1
AM1P-0505SZ
+Vin
5V
-Vin
+Vout
5V
-Vout
U4C
U5C
U2E
U3E
C5
100n
C6
100n
C8
100n
C11
100n
TL072
4066
6V
220u
C12
-5V
H1
H2
H3
H4
MountingHole
Lightgun
X1
OPL820-OC
R35
39k
R36
39k
K1
Q7
2N7000
J8
Conn_01x03
Vector Drawing for WWI
VecCRT.kicad_sch
Rev: 0.2a
Datum: 2023-07-06