Drawings Prepared For:

Cedar Ridge

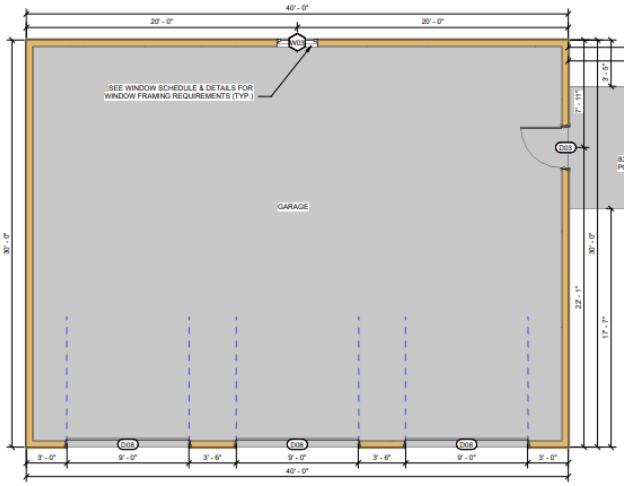

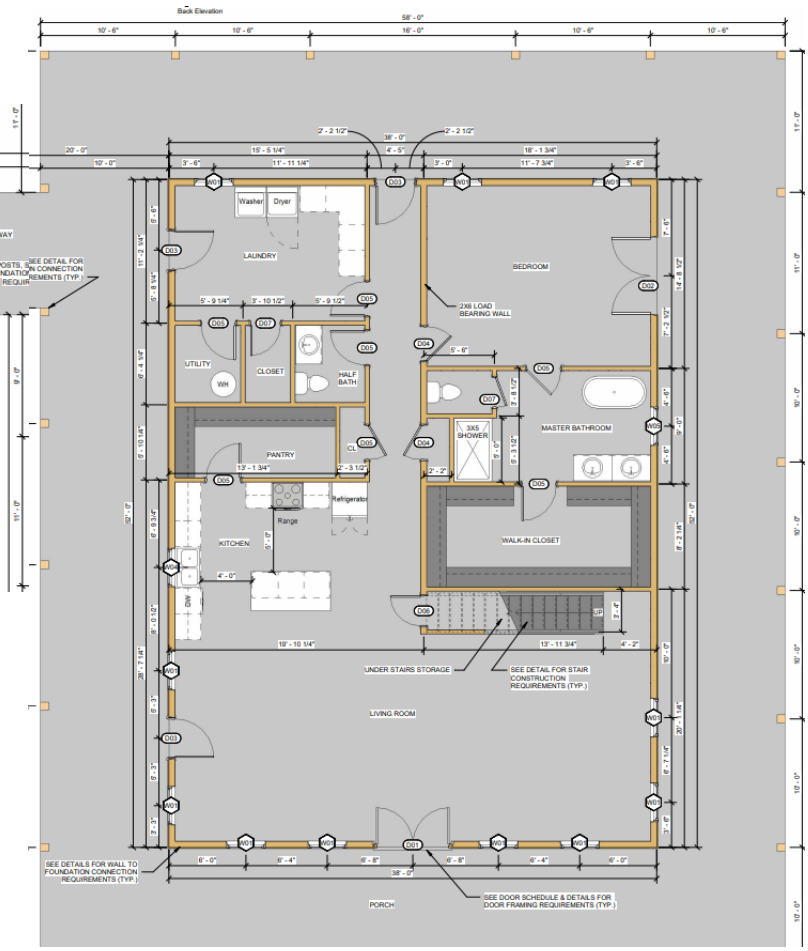

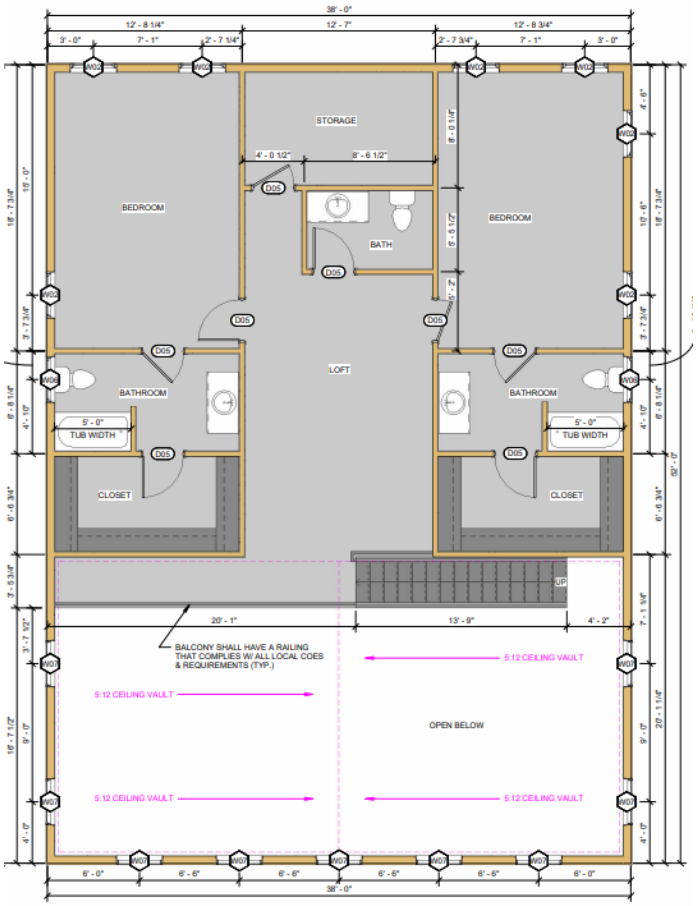

Cabinetry Length
Overall Length
65' - 3"

SQFT Schedule	
Area	Name
2290 SF	PORCH
1200 SF	GARAGE
1285 SF	2ND FLOOR
1976 SF	1ST FLOOR

Window Schedule

Mark	Count	Size	Description	Header Size	Window Area
W01	11	3' - 0" x 5' - 6"0	S.H. WINDOW	(2) 2X10	185 SF
W02	7	3' - 0" x 5' - 6"0	S.H. WINDOW W/ SASH LINERS	(2) 2X10	118 SF
W03	1	3' - 0" x 4' - 0"0	S.H. WINDOW	(2) 2X10	12 SF
W04	3	3' - 0" x 3' - 0"0	S.H. WINDOW	(2) 2X10	28 SF
W05	1	3' - 0" x 3' - 0"0	S.H. WINDOW **TEMP**	(2) 2X10	9 SF
W06	2	3' - 0" x 3' - 0"0	S.H. WINDOW **TEMP** W/ SASH LINERS	(2) 2X10	19 SF
W07	9	3' - 0" x 5' - 6"0	FIXED WINDOW	(2) 2X10	152 SF
					523 SF

Door Schedule

Mark	Count	Size	Description	Header Size	Door Area
D01	1	6' - 0" x 6' - 8"	EXT. FRENCH DOOR 3/4 GLASS	(2) 2X12	42 SF
D02	1	6' - 0" x 6' - 8"	EXT. FRENCH DOOR FULL GLASS	(2) 2X12	40 SF
D03	4	3' - 0" x 6' - 8"	EXT. DOOR 1/2 GLASS	(2) 2X10	86 SF
D04	2	2' - 8" x 6' - 8"	INT. DOOR (LOAD BEARING)	(2) 2X10	0 SF
D05	15	2' - 8" x 6' - 8"	INT. DOOR	(2) 2X6	0 SF
D06	1	2' - 4" x 6' - 8"	INT. DOOR (LOAD BEARING)	(2) 2X10	0 SF
D07	2	2' - 4" x 6' - 8"	INT. DOOR	(2) 2X6	0 SF
D08	3	9' - 0" x 8' - 0"	GARAGE DOOR	(2) 11 7/8" LVL	216 SF
					383 SF

CEDAR RIDGE CABINET DESIGNS

KITCHEN

ISLAND

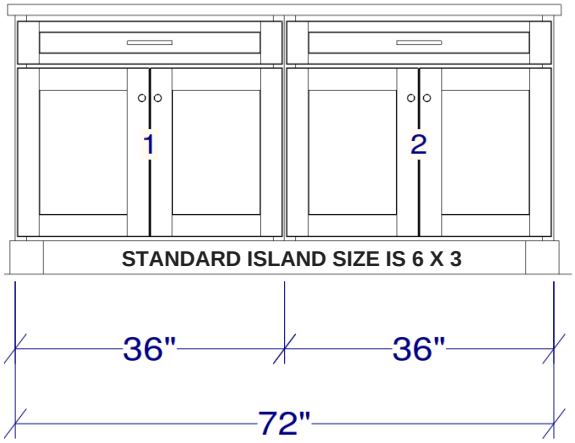

LAUNDRY

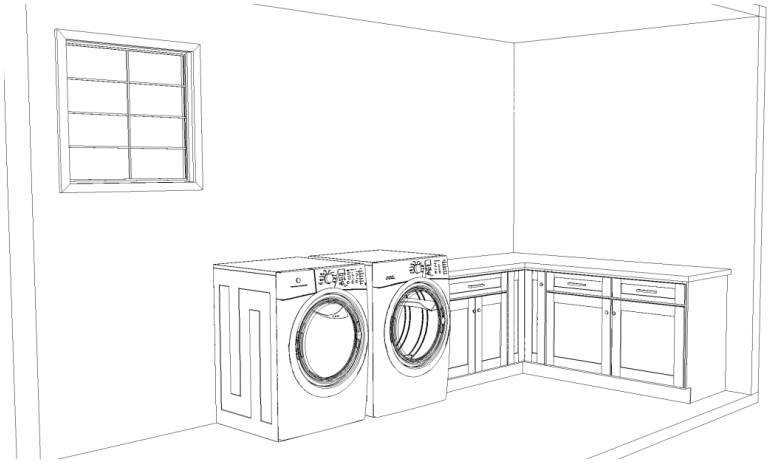

MASTER BATH

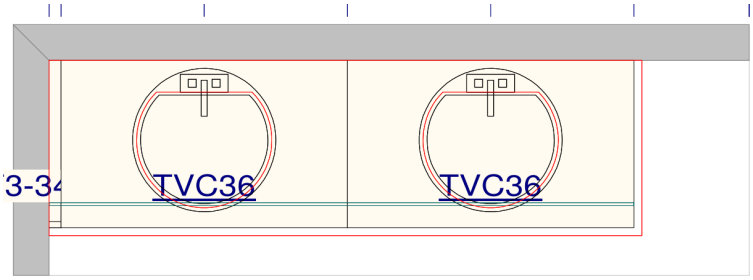

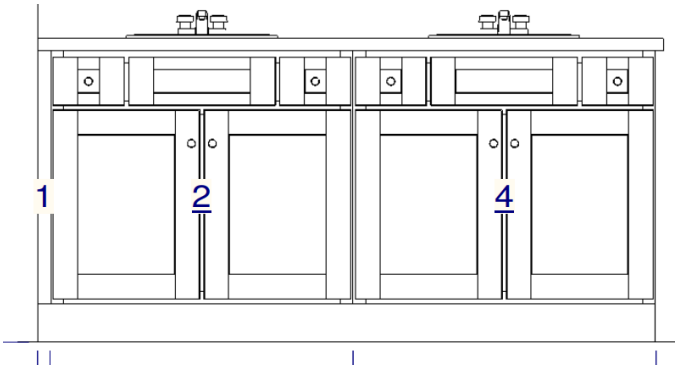

HALF BATH

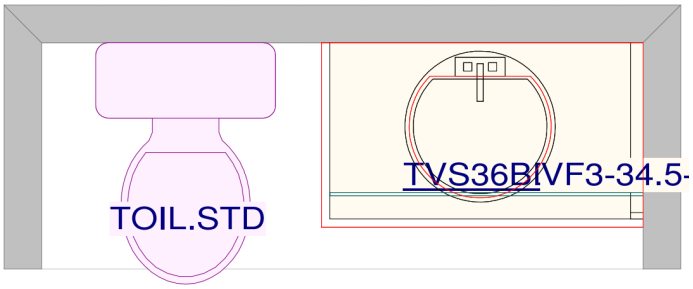

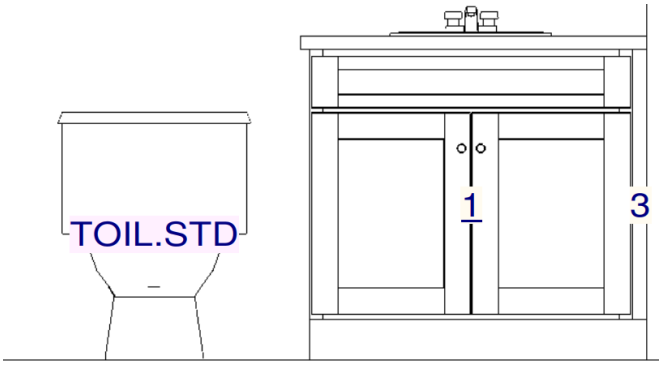

UPSTAIRS BATHS

BATH 2

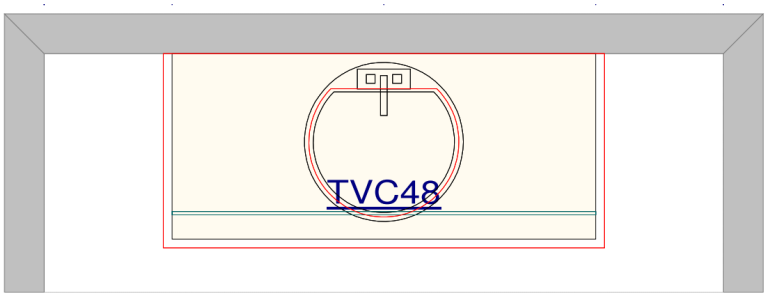

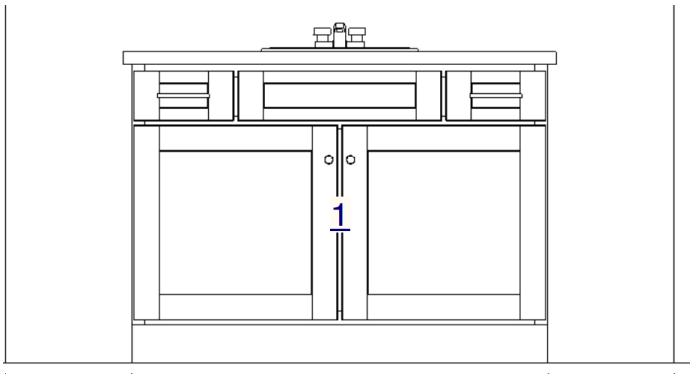

BATH 4

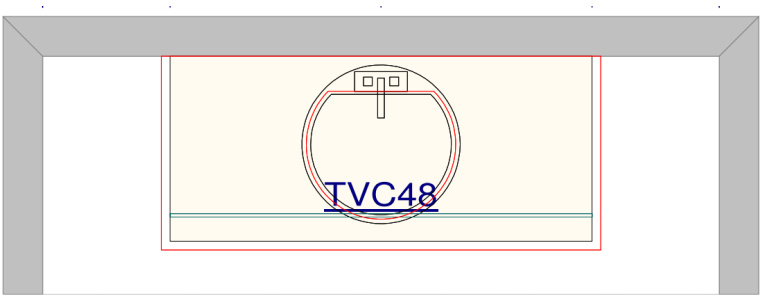

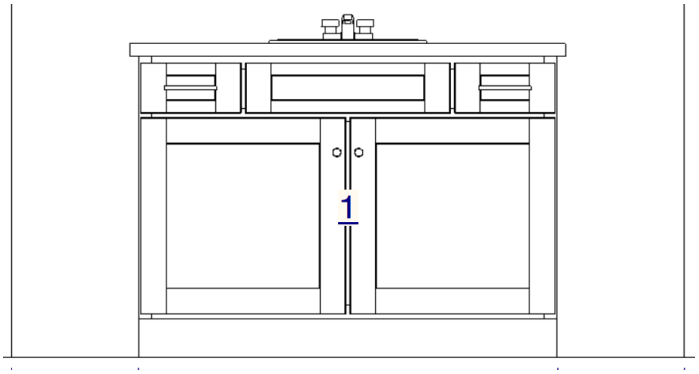
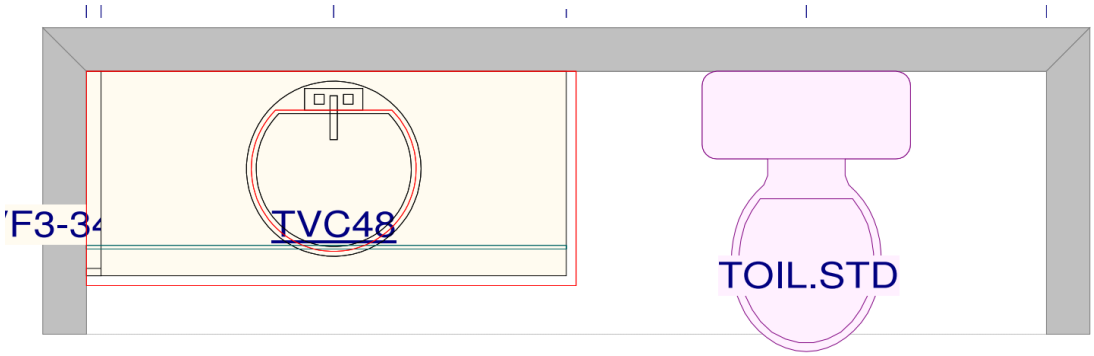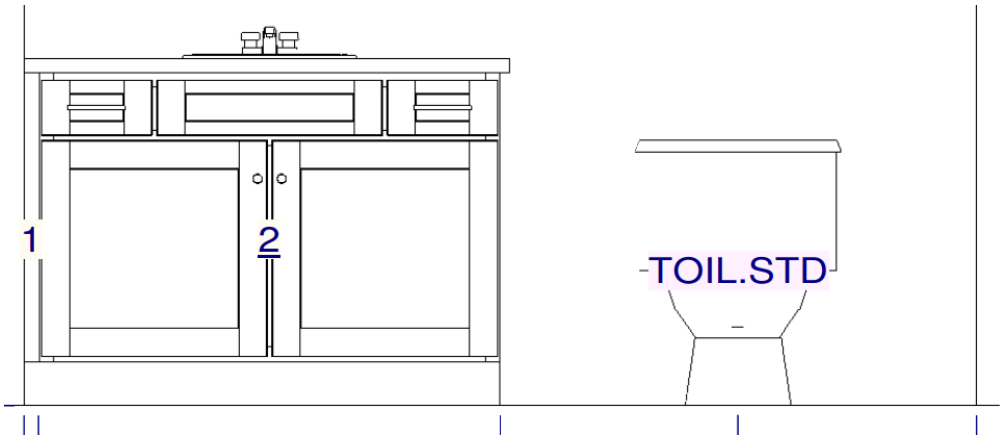
BATH 3