Drawings Prepared For:

East Fork

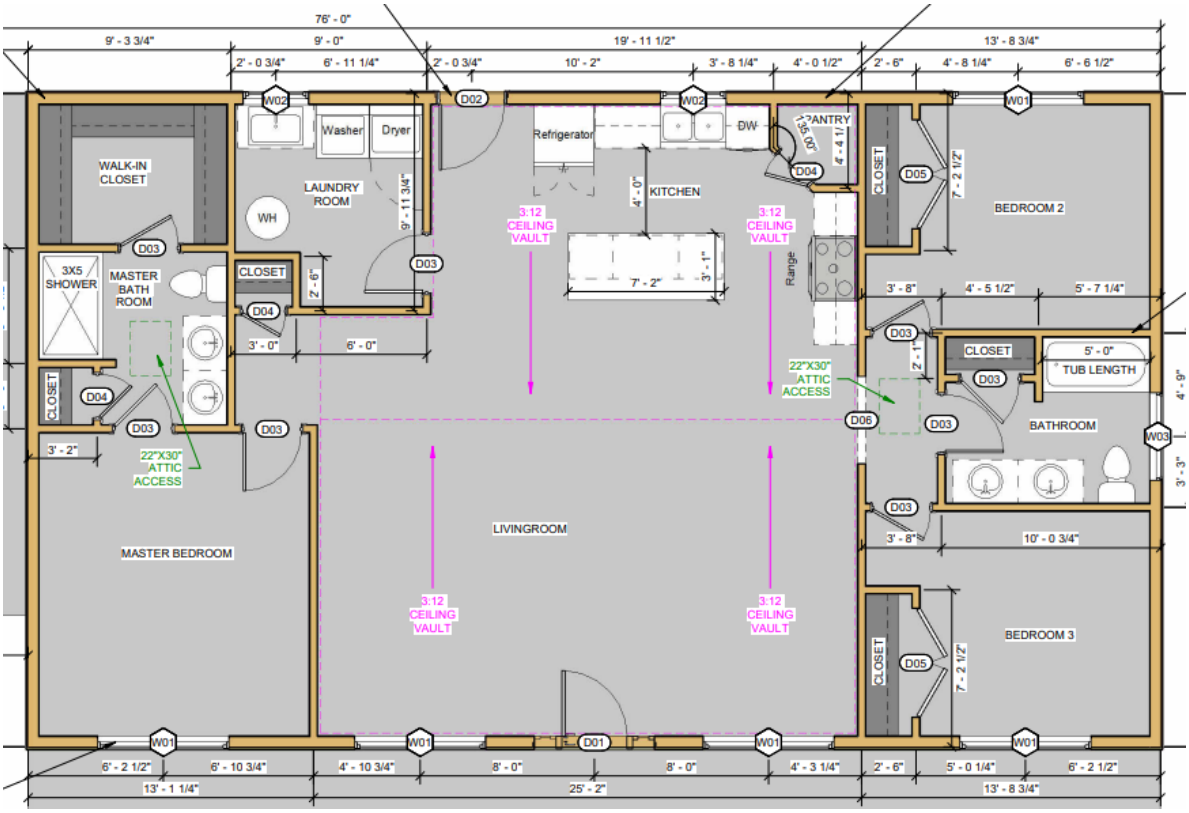

SQFT Schedule	
Area	Name
1560 SF	LIVING SPACE
576 SF	CARPORT
416 SF	PORCH

Cabinetry Length
Width
45' - 6"

Door Schedule

Mark	Count	Size	Description	Header Size	Door Area
D01	1	3' - 0" x 6' - 8"	EXT. DOOR W. SIDELIGHTS	(2) 2X12	42 SF
D02	1	3' - 0" x 6' - 8"	EXT. DOOR 1/2 GLASS	(2) 2X10	21 SF
D03	8	2' - 8" x 6' - 8"	INT. DOOR	(2) 2X6	0 SF
D04	3	2' - 0" x 6' - 8"	INT. DOOR	(2) 2X6	0 SF
D05	2	5' - 0" x 6' - 8"	INT. FRENCH DOOR	(2) 2X6	0 SF
D06	1	4' - 0" x 6' - 8"	WALL OPENING	(2) 2X6	0 SF
					63 SF

Window Schedule

Mark	Count	Size	Description	Header Size	Window Area
W01	5	6' - 0" x 5' - 6"0	TWIN S.H. WINDOWS	(2) 2X12	167 SF
W02	2	3' - 0" x 3' - 0"0	S.H. WINDOW	(2) 2X10	19 SF
W03	1	4' - 0" x 1' - 0"0	FIXED WINDOW	(2) 2X10	4 SF
					190 SF

EAST FORK CABINET DESIGNS

KITCHEN

ISLAND IS STANDARD BUT NOT SHOWN

ISLAND

LAUNDRY

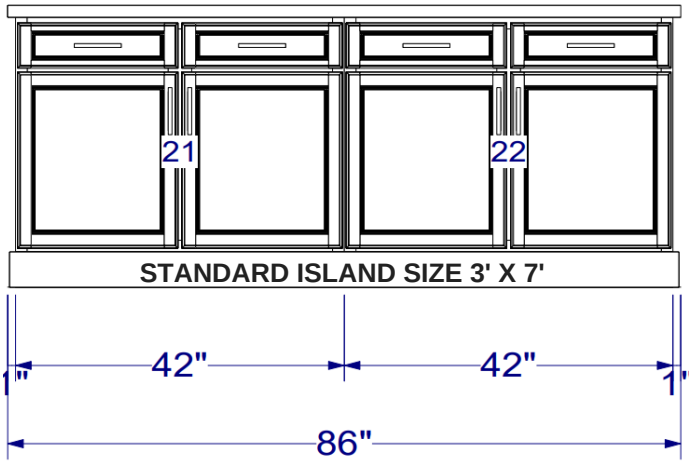

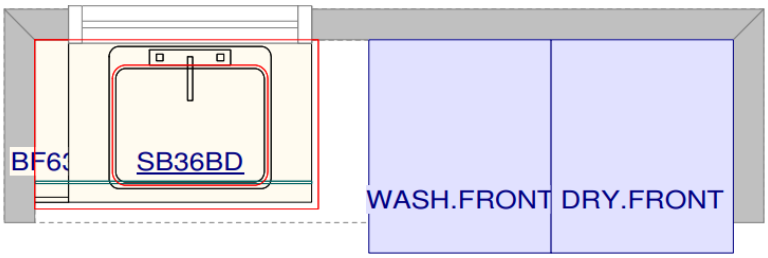

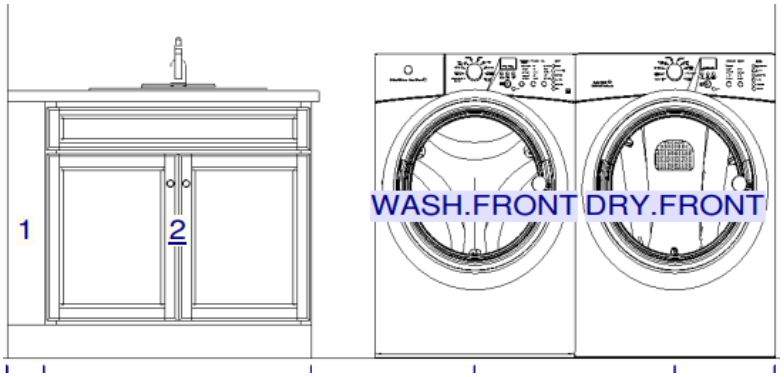

MASTER BATH
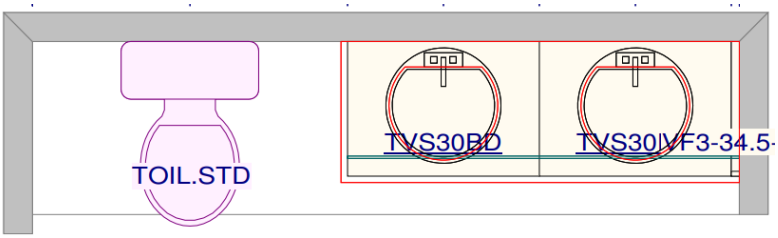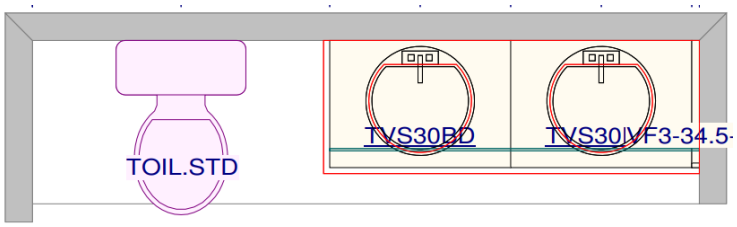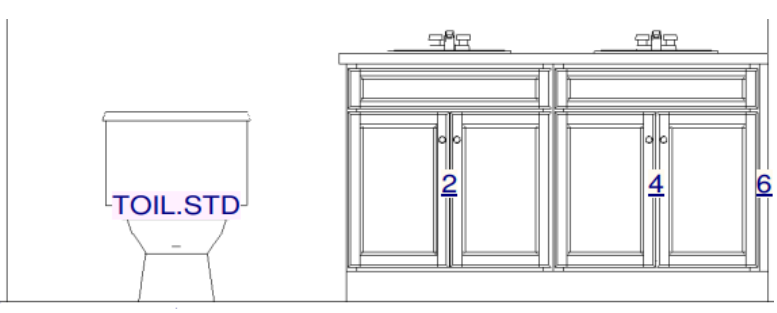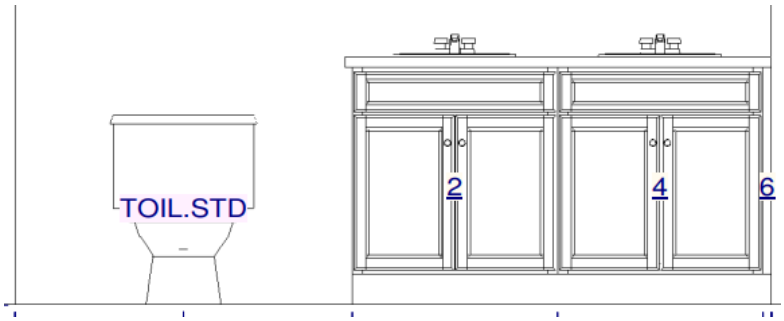
BATH 2