Drawings Prepared For:

Johnson Home

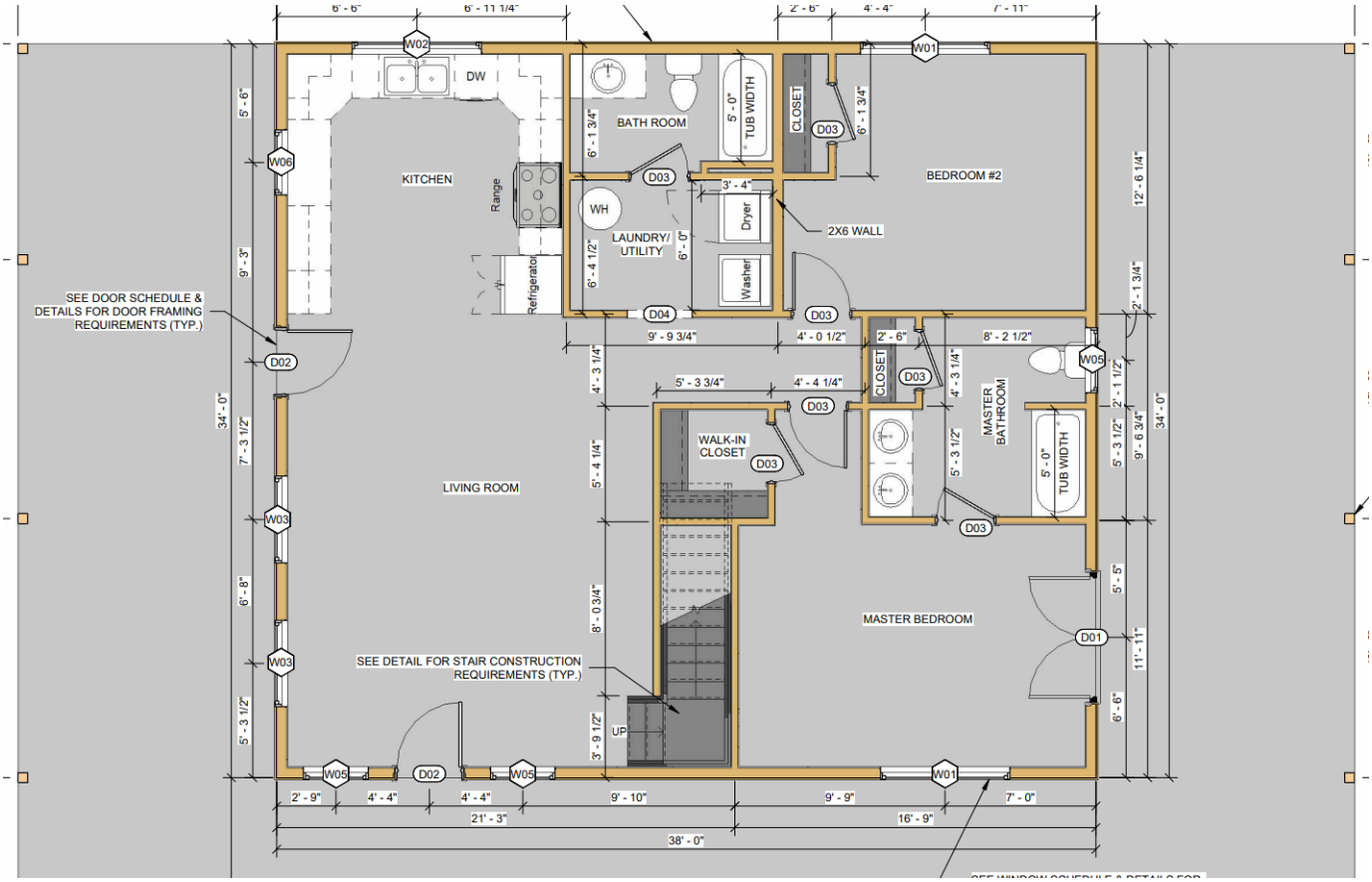

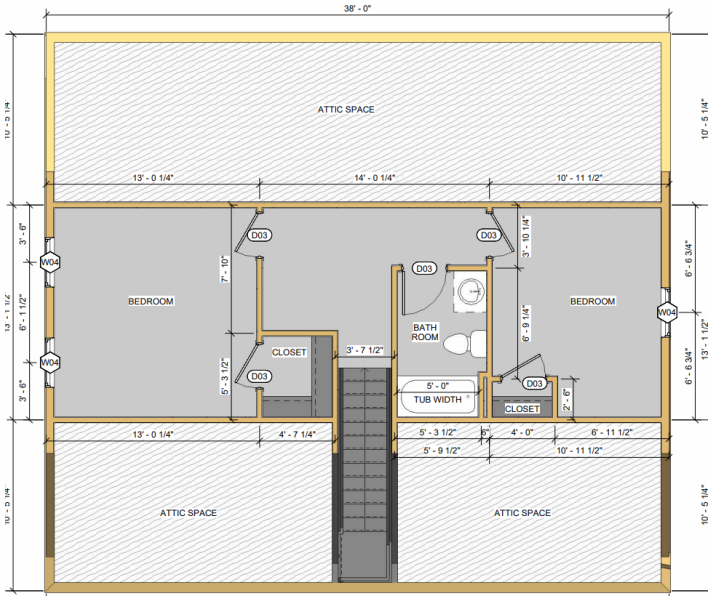

Cabinetry Length
Width
53' - 3"

Door Schedule

Mark	Count	Size	Description	Header Size	Door Area
D01	1	6' - 0" x 6' - 8"	EXT. FRENCH DOOR 3/4 GLASS	(2) 2X12	42 SF
D02	2	3' - 0" x 6' - 8"	EXT. DOOR 1/2 GLASS	(2) 2X10	40 SF
D03	12	2' - 8" x 6' - 8"	INT. DOOR	(2) 2X6	0 SF
D04	1	3' - 0" x 6' - 8"	WALL OPENING	(2) 2X6	0 SF
					82 SF

SQFT Schedule

Area	Name
1560 SF	PORCH
1292 SF	LIVING SPACE
478 SF	2ND FLOOR

Window Schedule

Mark	Count	Size	Description	Header Size	Window Area
W01	2	6' - 0" x 5' - 6"0	TWIN S.H. WINDOW		67 SF
W02	1	6' - 0" x 3' - 0"0	TWIN S.H. WINDOW	(2) 2x12	18 SF
W03	2	4' - 0" x 4' - 0"0	S.H. WINDOW	(2) 2X10	33 SF
W04	3	3' - 0" x 5' - 6"0	S.H. WINDOW W/ SASH LIMITERS	(2) 2X10	51 SF
W05	3	3' - 0" x 3' - 0"0	S.H. WINDOW **TEMP**	(2) 2X10	28 SF
W06	1	3' - 0" x 3' - 0"0	S.H. WINDOW	(2) 2X10	9 SF
					206 SF

JOHNSON MODEL CABINET DESIGNS

KITCHEN

MASTER BATH

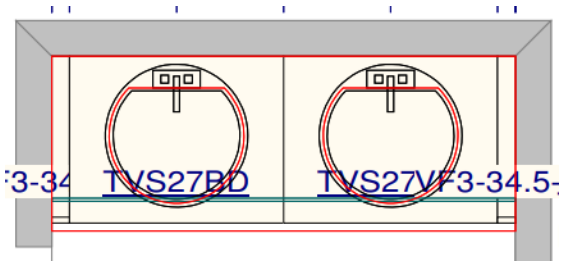

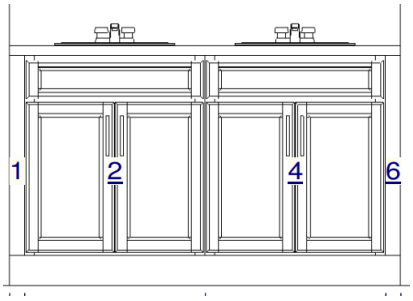

BATH 2

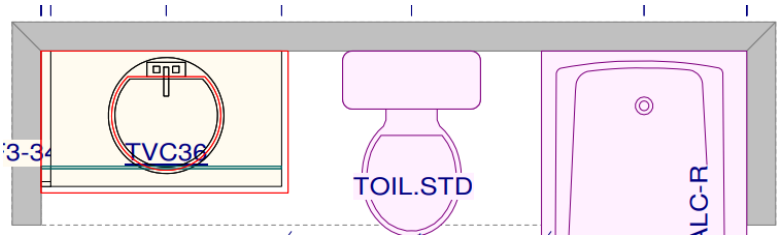

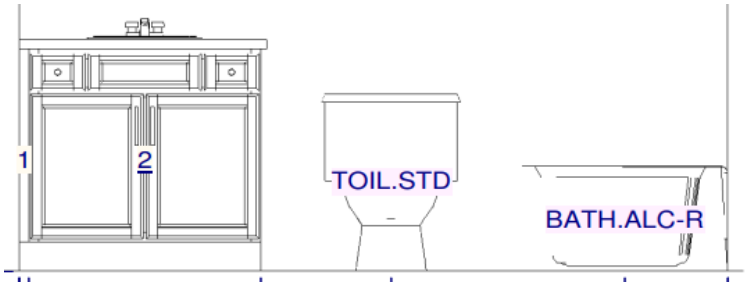
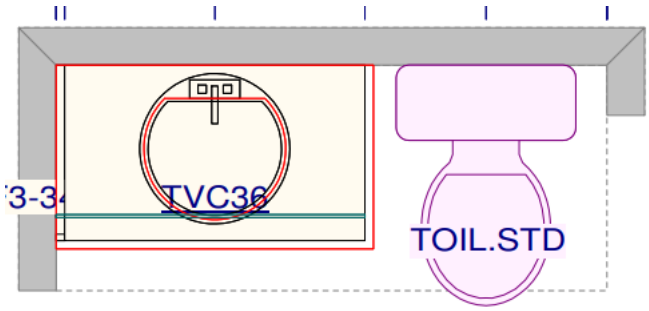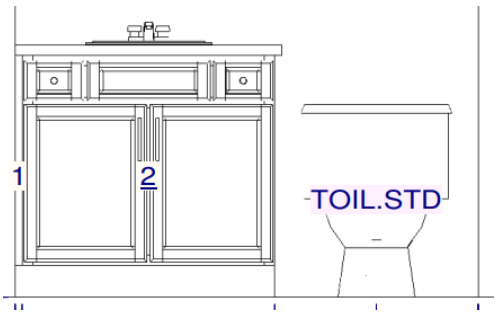
BONUS BATH