Drawings Prepared For:

Maple Grove

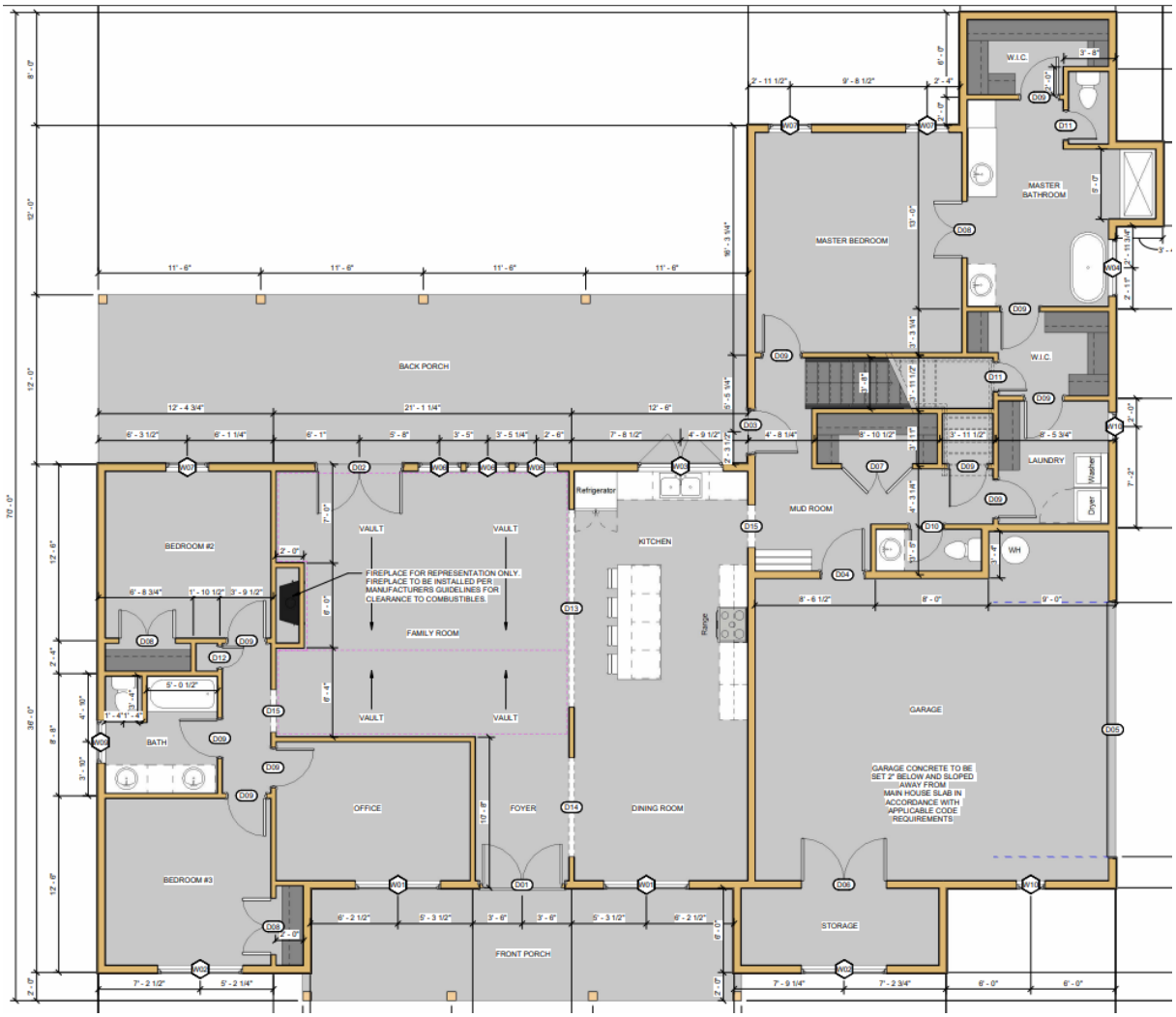

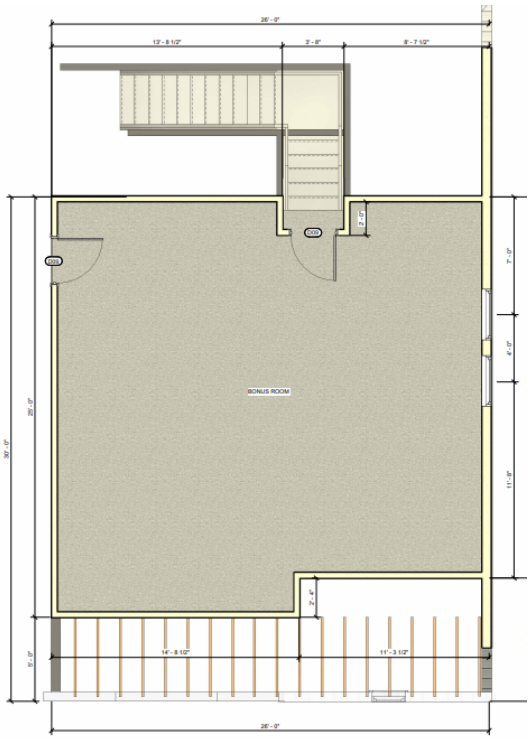

SQFT Schedule

Area	Name
680 SF	Garage
242 SF	Front Porch
621 SF	Bonus Room
552 SF	Back Porch
2391 SF	1st Floor Living Area

Cabinetry Length

Overall Length
55' - 6"

Door Schedule1

Mark	Count	Size	Description	Header Size	Door Area
D01	1	6' - 0" x 6' - 8"	EXT FRENCH DOOR	(2) 2X12	42 SF
D02	1	6' - 0" x 6' - 8"	EXT. DOUBLE DOOR	(2) 2X12	42 SF
D03	1	3' - 0" x 6' - 8"	EXT. DOOR	(2) 2X10	21 SF
D04	1	3' - 0" x 6' - 8"	SOLID PANEL DOOR W/SELF CLOSING HINGES	(2) 2X10	0 SF
D05	1	18' - 0" x 8' - 0"	GARAGE DOOR	(3) 1 3/4"X 16 LVL	147 SF
D06	1	6' - 0" x 6' - 8"	INT. DOUBLE DOOR	(2) 2X6	0 SF
D07	1	5' - 0" x 6' - 8"	INT. DOUBLE DOOR	(2) 2X6	0 SF
D08	3	4' - 0" x 6' - 8"	INT. DOUBLE DOOR	(2) 2X6	0 SF
D09	12	2' - 8" x 6' - 8"	INT. DOOR	(2) 2X6	0 SF
D10	1	2' - 4" x 6' - 8"	INT. DOOR	(2) 2X6	0 SF
D11	2	2' - 0" x 6' - 8"	INT. DOOR	(2) 2X6	0 SF
D12	1	1' - 6" x 6' - 8"	INT. DOOR	(2) 2X6	0 SF
D13	1	14' - 0" x 6' - 8"	WALL OPENING	(2) 1 3/4"X 16 LVL	0 SF
D14	1	7' - 0" x 6' - 8"	WALL OPENING	(2) 1 3/4"X 11 7/8" LVL	0 SF
D15	2	3' - 0" x 6' - 8"	WALL OPENING	(2) 2X10	0 SF
					251 SF

Window Schedule1

Mark	Count	Size	Description	Header Size	Window Area
W01	2	6' - 0" x 6' - 0"0	SINGLE HUNG TWIN TEMPERED	(2) 2X12	73 SF
W02	2	6' - 0" x 5' - 6"0	SINGLE HUNG TWIN	(2) 2X12	67 SF
W03	1	6' - 0" x 3' - 0"0	CASEMENT DOUBLE	(2) 2X12	18 SF
W04	1	4' - 0" x 4' - 0"0	FIXED TEMPERED	(2) 2x10	16 SF
W05	2	2' - 0" x 2' - 0"0	FIXED	(2) 2x10	8 SF
W06	3	3' - 0" x 6' - 0"0	SINGLE HUNG TEMPERED	(2) 2x10	55 SF
W07	3	3' - 0" x 5' - 6"0	SINGLE HUNG	(2) 2x10	51 SF
W08	2	3' - 0" x 5' - 6"0	SINGLE HUNG W/SASH LIMITERS	(2) 2x10	34 SF
W09	1	3' - 0" x 3' - 0"0	SINGLE HUNG TEMPERED	(2) 2x10	9 SF
W10	2	2' - 0" x 3' - 0"0	SINGLE HUNG	(2) 2x10	12 SF
W11	1	4' - 0" x 4' - 0"0	FIXED DOUBLE	(2) 2x10	16 SF
					360 SF

MAPLE GROVE CABINET DESIGNS

KITCHEN

ISLAND

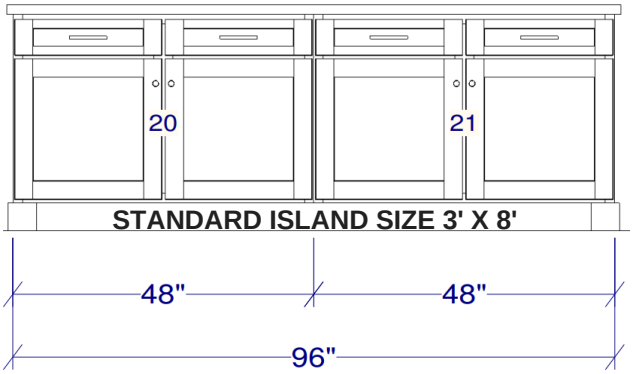

HALF BATH

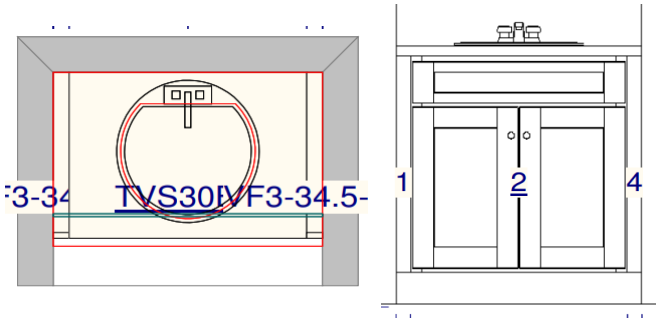

MASTER BATH

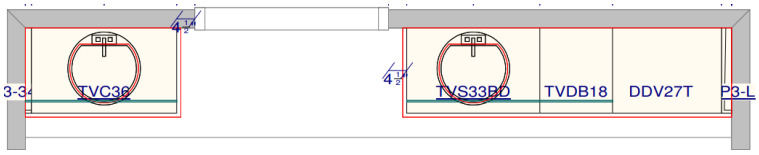

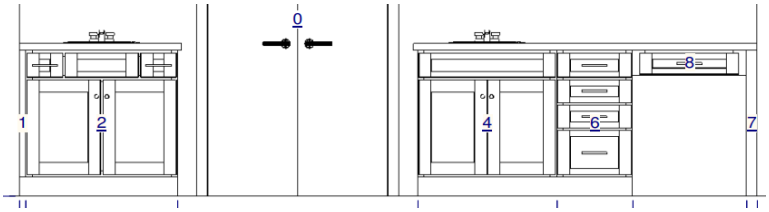
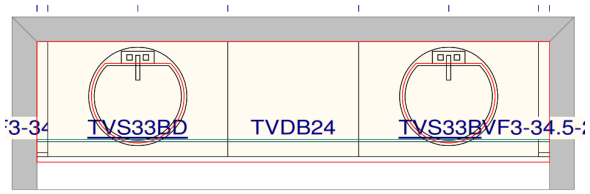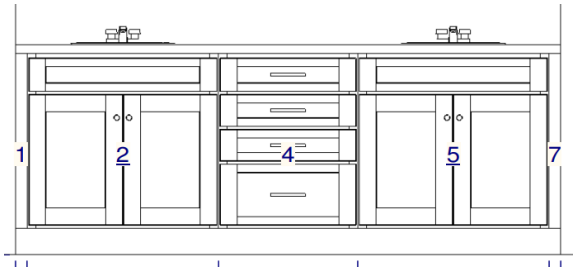
BATH 2