Drawings Prepared For:

Piney Creek

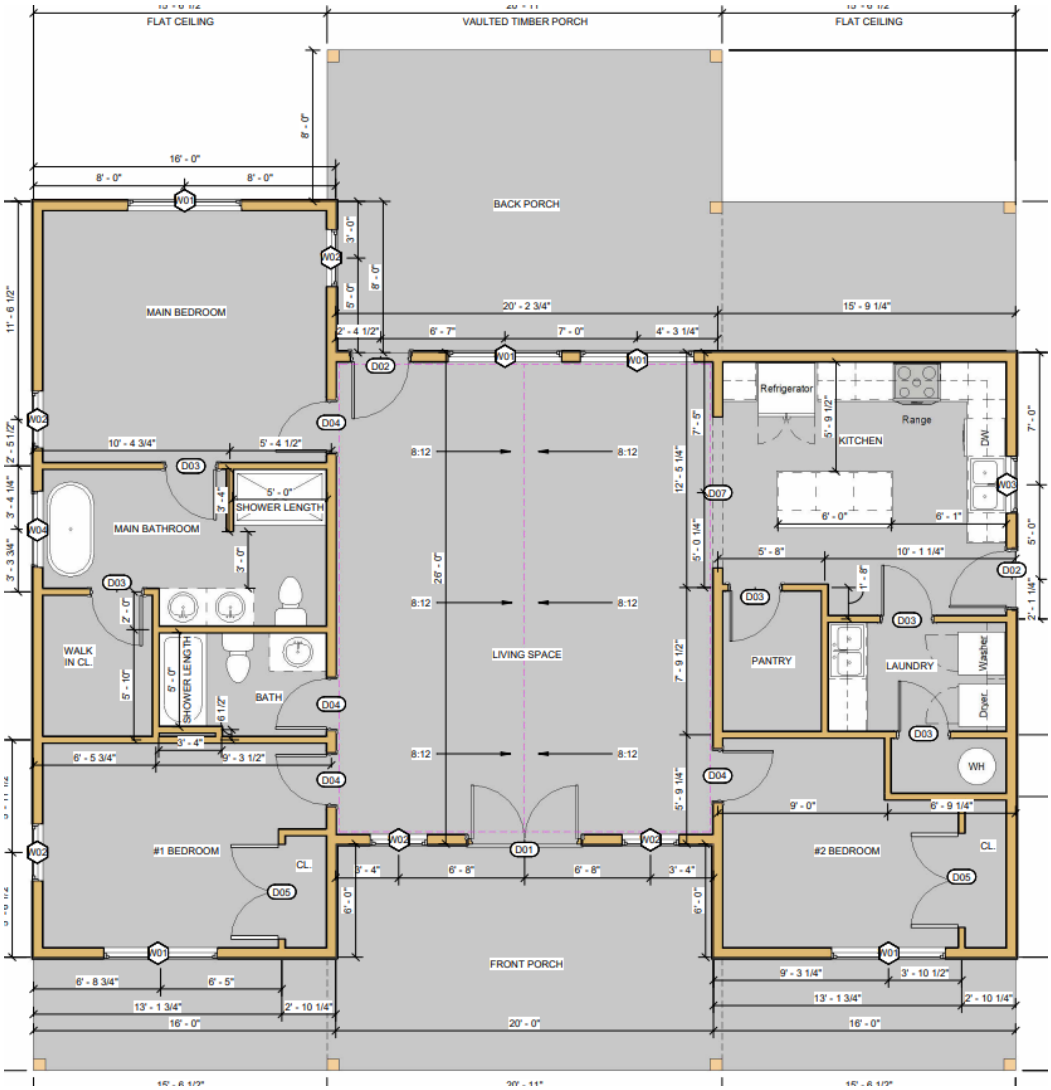

Cabinetry Length
Width
62' - 3"

SQFT Schedule.	
Area	Name
1672 SF	House
432 SF	Front Porch
455 SF	Back Porch

Window Schedule.					
Mark	Count	Size	Description	Header Size	Window Area
W01	5	6' - 0" x 5' - 6"0	TWIN 3/0 x 5/6 S/H WINDOW	(2) 2x12	167 SF
W02	5	3' - 0" x 5' - 6"0	S/H WINDOW	(2) 2x10	84 SF
W03	1	3' - 0" x 3' - 0"0	S/H WINDOW	(2) 2x10	9 SF
W04	1	4' - 0" x 4' - 0"0	FIXED TEMP.	(2) 2x10	16 SF
W05	2	3' - 0" x 3' - 0"0	FIXED TRAPAZOID 8:12 PITCH	PER MANUF.	15 SF
W06	1	5' - 6" x 5' - 6"0	5:12 PITCH PENTAGON WINDOW	PER MANUF.	25 SF
					317 SF

Door Schedule.					
Mark	Count	Size	Description	Header Size	Door Area
D01	1	6' - 0" x 6' - 8"	French Door	(2) 2x12	42 SF
D02	2	3' - 0" x 6' - 8"	Entry Door	(2) 2x10	43 SF
D03	5	2' - 8" x 6' - 8"	Int. Door	(2) 2x6	0 SF
D04	4	2' - 8" x 6' - 8"	Int. Door	(2) 2x10	0 SF
D05	2	5' - 0" x 7' - 0"	Dbl. Int. Door	(2) 2x6	0 SF
D07	1	8' - 0" x 6' - 8"	Door Opening	(2) 11 7/8" LVL	0 SF
					84 SF

PINEY CREEK CABINET DESIGNS

KITCHEN

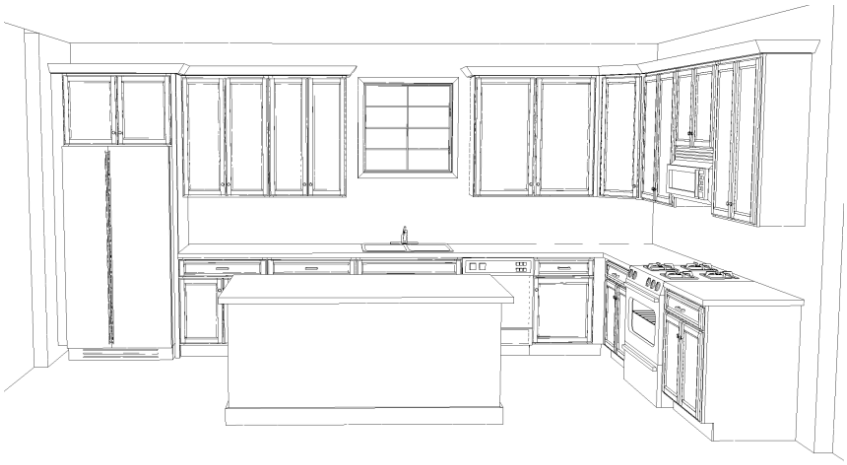

ISLAND

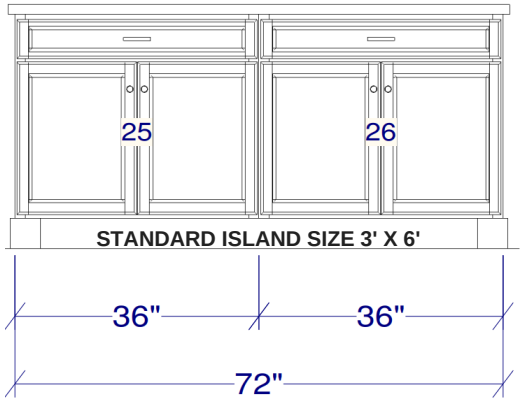

LAUNDRY

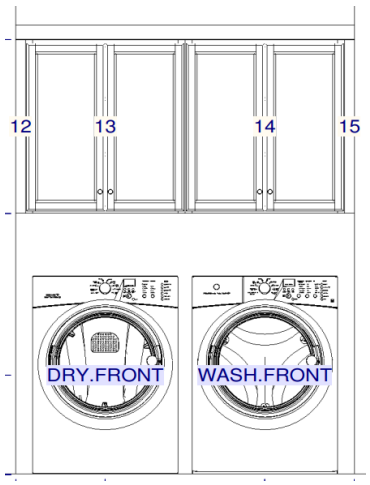

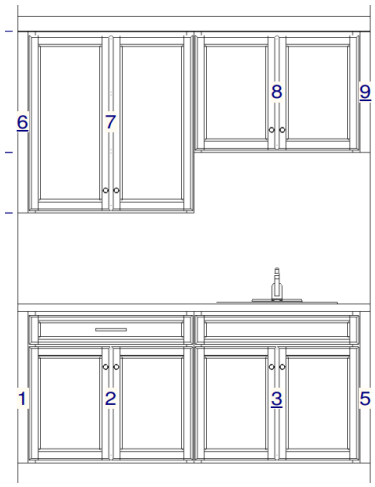

MASTER BATH

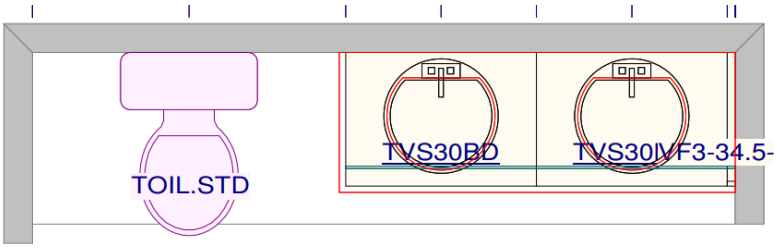

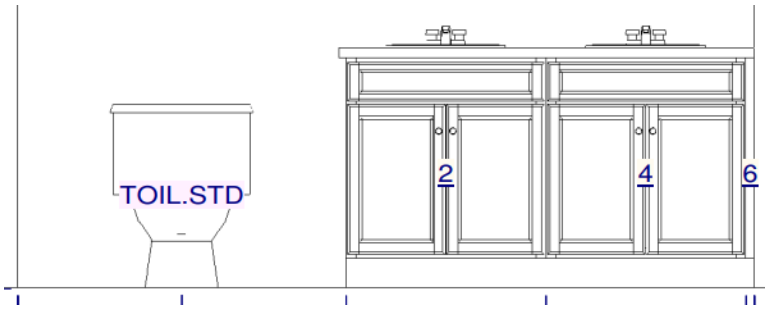
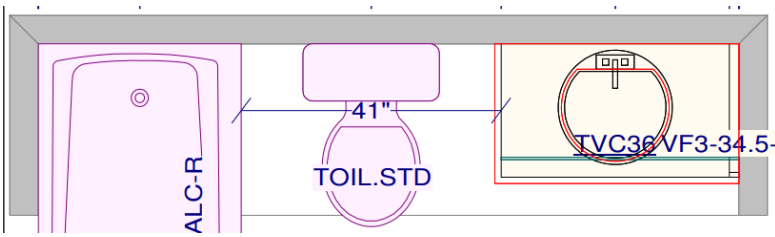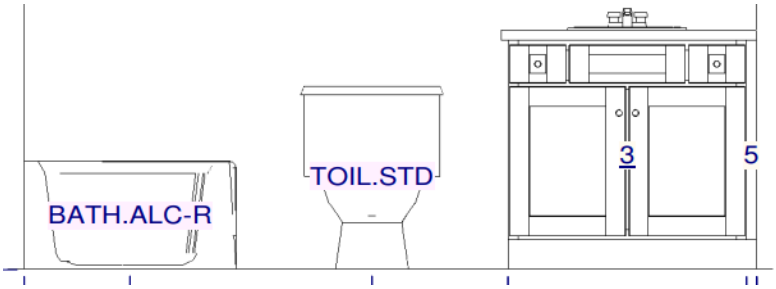
BATH 2