Drawings Prepared For:

River View Cottage

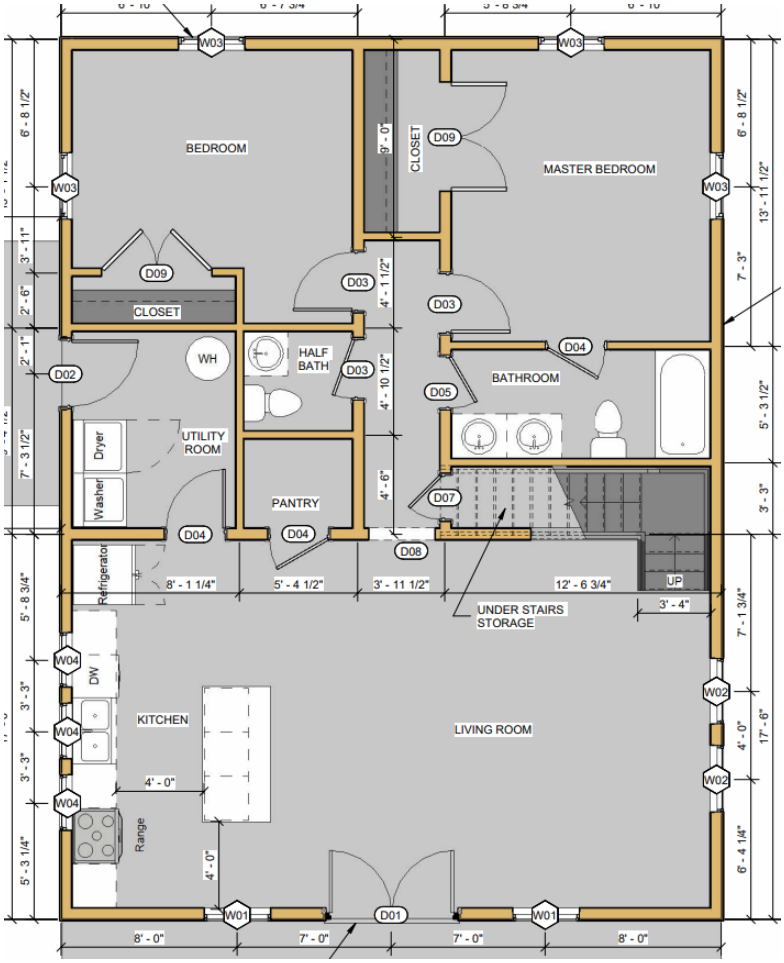

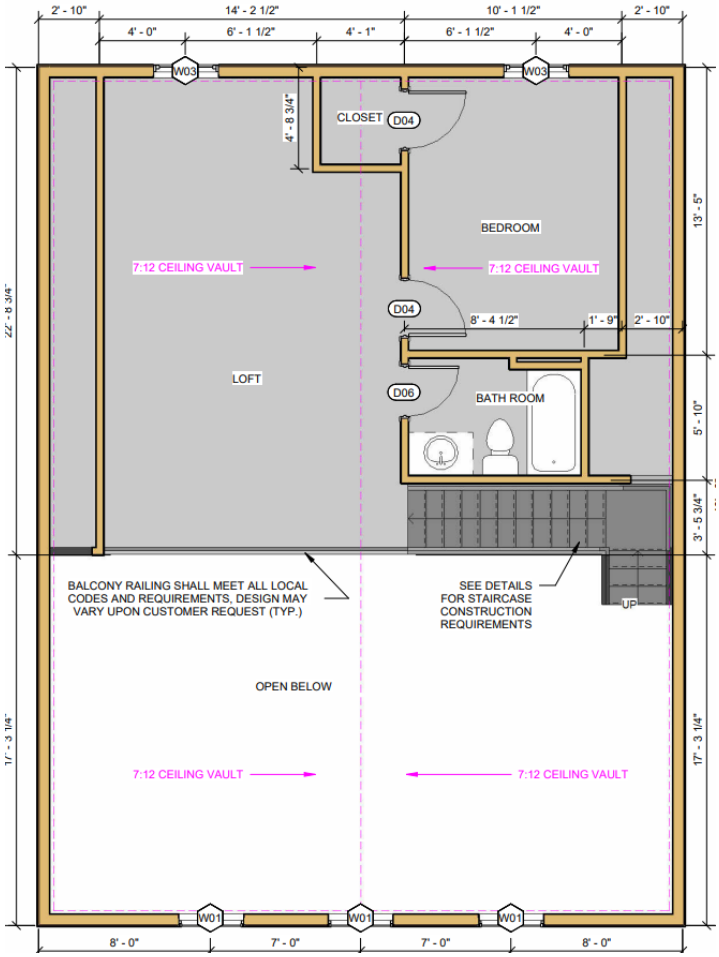

Cabinetry Length
Width
27' - 0"

SQFT Schedule	
Area	Name
1200 SF	HOUSE SLAB
639 SF	2ND FLOOR
240 SF	FRONT PORCH SLAB
96 SF	SIDE PORCH SLAB

Door Schedule

Mark	Count	Size	Description	Header Size	Door Area
D01	1	6' - 0" x 6' - 8"	EXT. FRENCH DOOR 3/4 GLASS	(2) 2X12	42 SF
D02	1	3' - 0" x 6' - 8"	EXT. DOOR 1/2 GLASS	(2) 2X10	21 SF
D03	3	2' - 8" x 6' - 8"	INT. DOOR (LOAD BEARING)	(2) 2X10	0 SF
D04	5	2' - 8" x 6' - 8"	INT. DOOR	(2) 2X6	0 SF
D05	1	2' - 4" x 6' - 8"	INT. DOOR (LOAD BEARING)	(2) 2X10	0 SF
D06	1	2' - 4" x 6' - 8"	INT. DOOR	(2) 2X6	0 SF
D07	1	2' - 0" x 6' - 8"	INT. DOOR (LOAD BEARING)	(2) 2X10	0 SF
D08	1	3' - 0" x 6' - 8"	WALL OPENING	(2) 2X10	0 SF
D09	2	5' - 0" x 6' - 8"	INT. FRENCH DOORS	(2) 2X6	0 SF
					63 SF

Window Schedule

Mark	Count	Size	Description	Header Size	Window Area
W01	7	3' - 0" x 6' - 0"0	FIXED WINDOW **TEMP**	(2) 2x10	129 SF
W02	2	3' - 0" x 6' - 0"0	FIXED WINDOW **TEMP**	(2) 2x6	37 SF
W03	6	3' - 0" x 5' - 6"0	S.H. WINDOW	(2) 2x10	101 SF
W04	3	2' - 6" x 3' - 6"0	FIXED WINDOW	(2) 2X6	27 SF
W05	3	2' - 6" x 1' - 6"0	FIXED WINDOW	(2) 2x10	12 SF
					305 SF

RIVERVIEW COTTAGE CABINET DESIGNS

KITCHEN

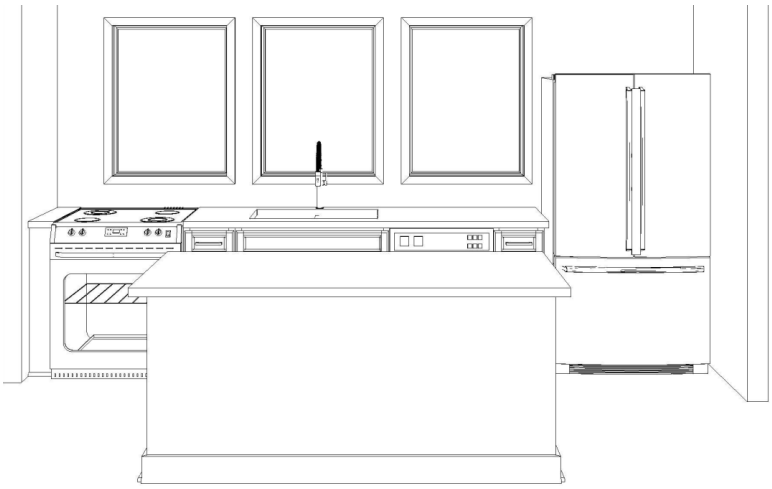

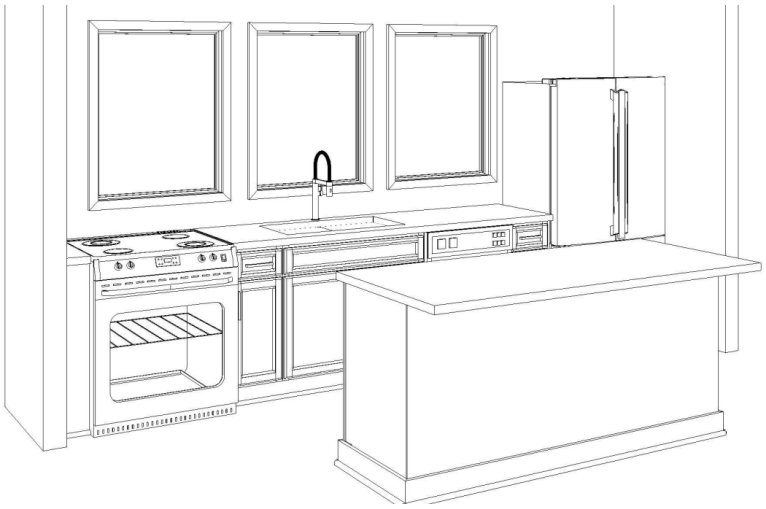

ISLAND

MASTER BATH

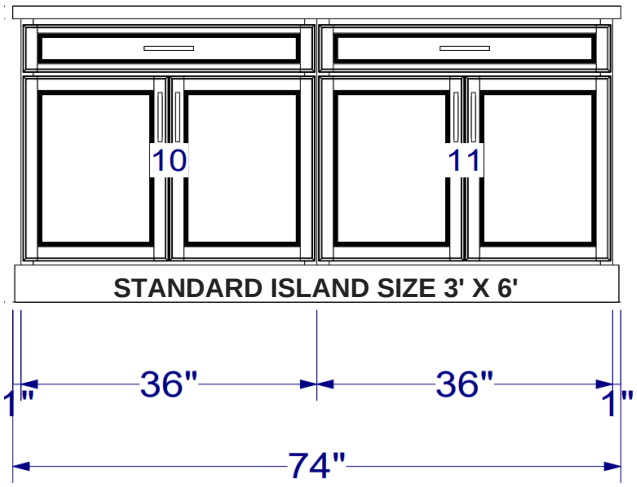

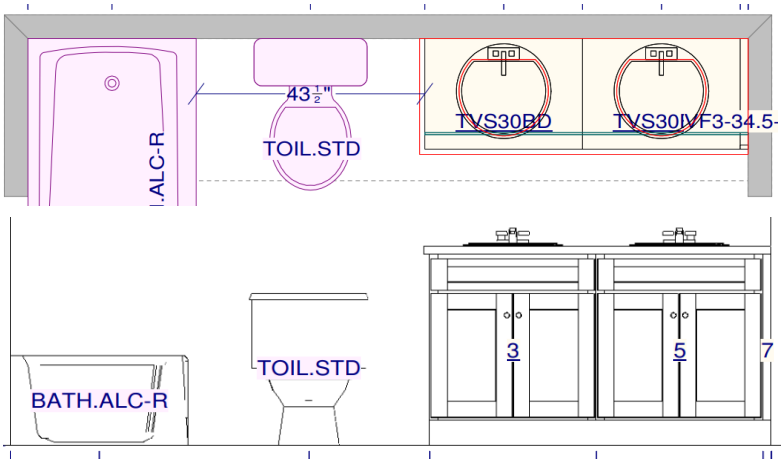

HALF BATH
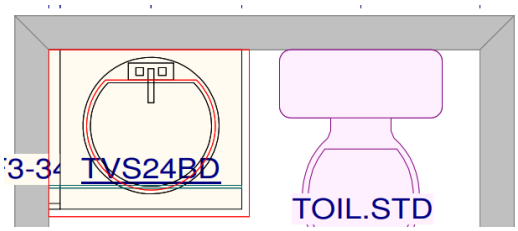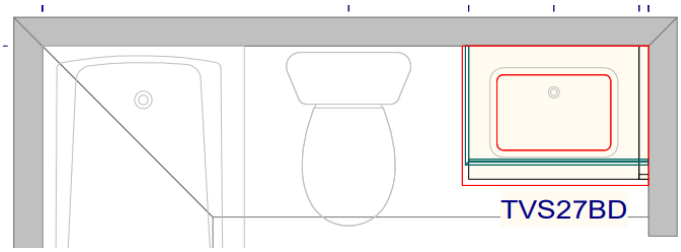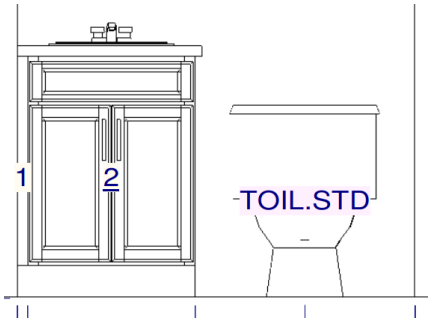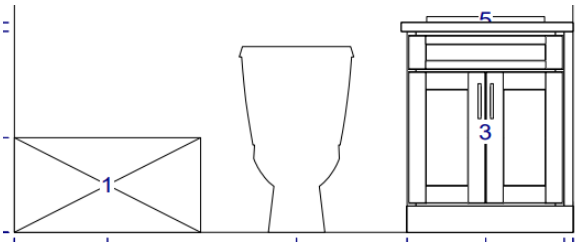
BATH 2