Drawings Prepared For:

WHISPERING PINES

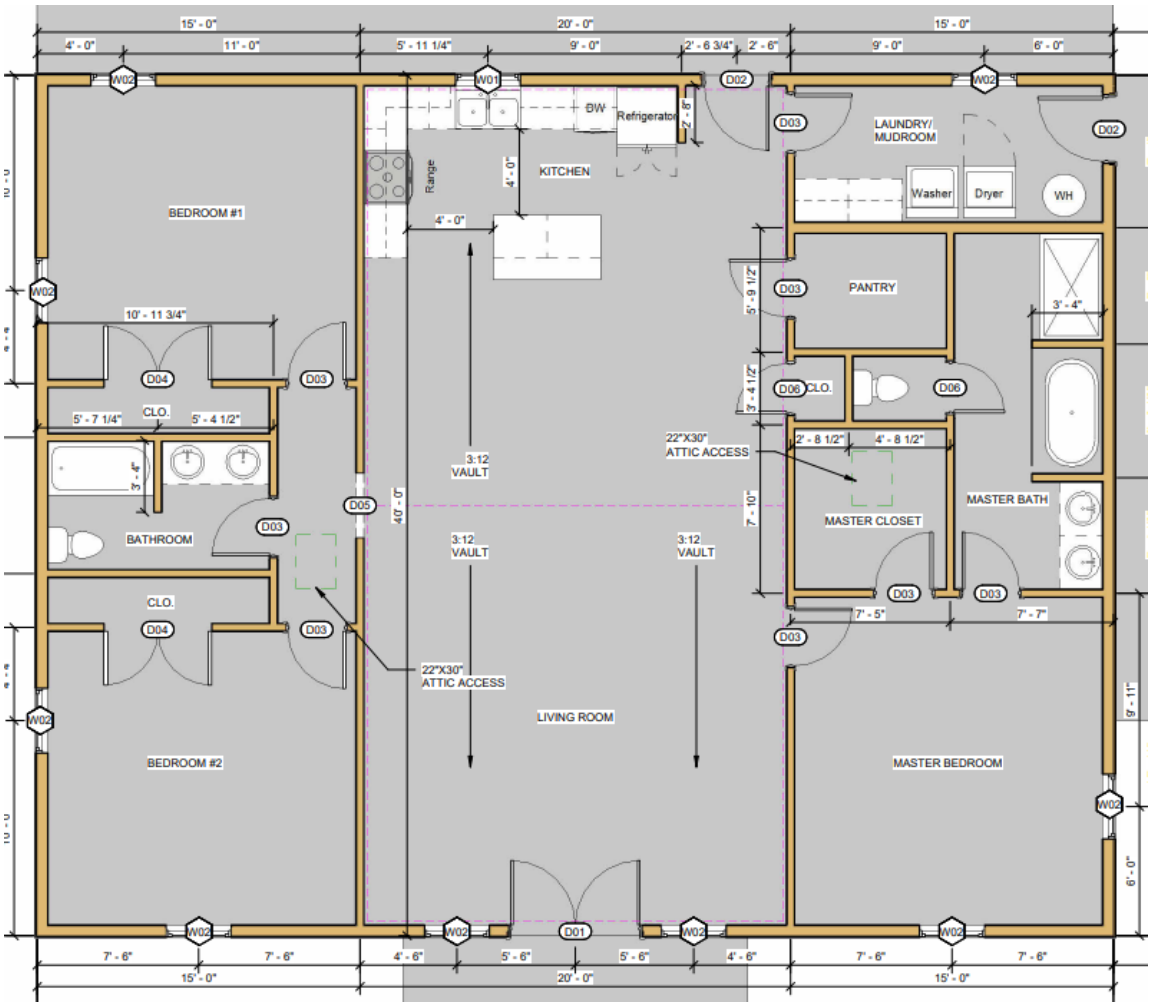

Cabinetry Length

Width
53' - 9"

Door Schedule

Mark	Count	Size	Description	Header Size	Door Area
D01	1	6' - 0" x 6' - 8"	EXTERIOR DOOR FRENCH	(2) 2x12	42 SF
D02	2	3' - 0" x 6' - 8"	EXTERIOR DOOR	(2) 2x10	21 SF
D03	8	2' - 8" x 6' - 8"	INTERIOR DOOR	(2) 2x6	0 SF
D04	2	5' - 0" x 6' - 8"	DOUBLE CLOSET DOOR	(2) 2x6	0 SF
D05	1	3' - 0" x 6' - 8"	FINISHED OPENING	(2) 2x6	0 SF
D06	2	2' - 4" x 6' - 8"	INTERIOR DOOR	(2) 2x6	0 SF
					63 SF

SQFT Schedule

Area	Name
2000 SF	Living Area
128 SF	Front Porch
900 SF	Carport
500 SF	Back Porch

Window Schedule

Mark	Count	Size	Description	Header Size	Window Area
W01	1	3' - 0" x 3' - 0"0	Single Hung	(2) 2x10	9 SF
W02	9	3' - 0" x 5' - 6"0	Single Hung	(2) 2x10	152 SF
					161 SF

WHISPERING PINES CABINET DESIGNS

KITCHEN

ISLAND

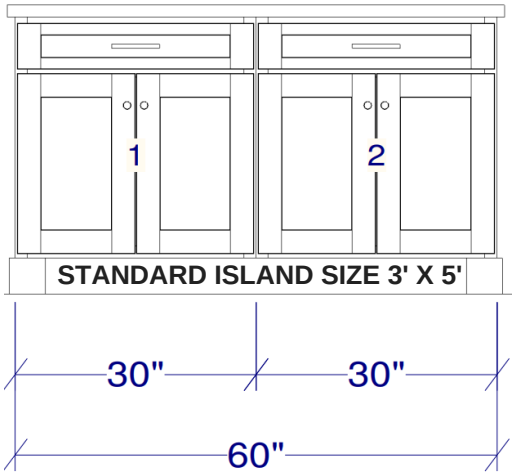

LAUNDRY

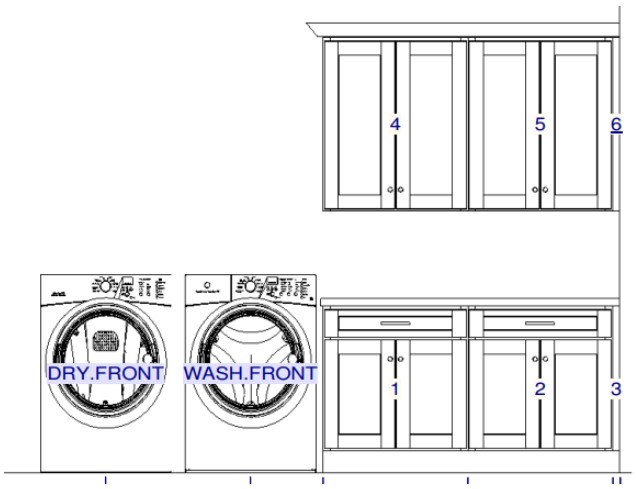

MASTER BATH

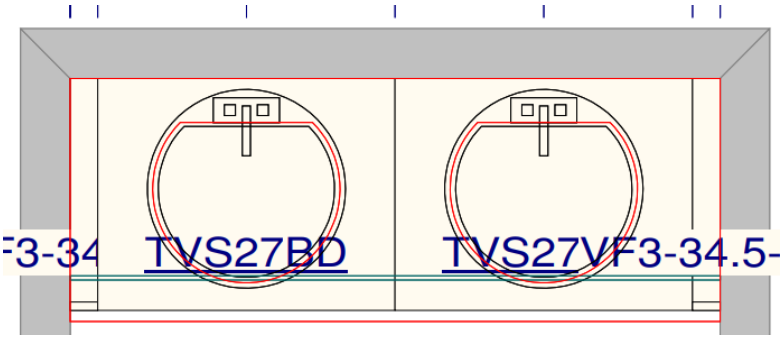

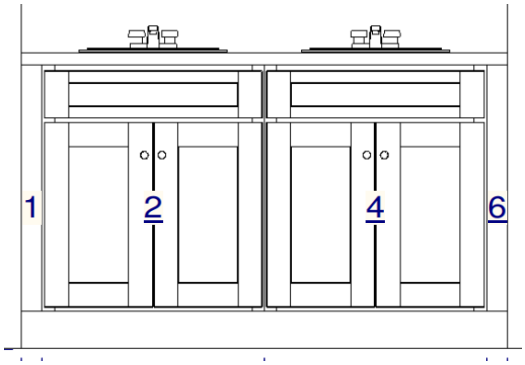
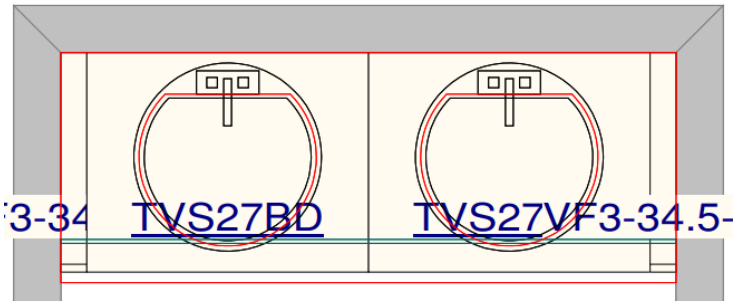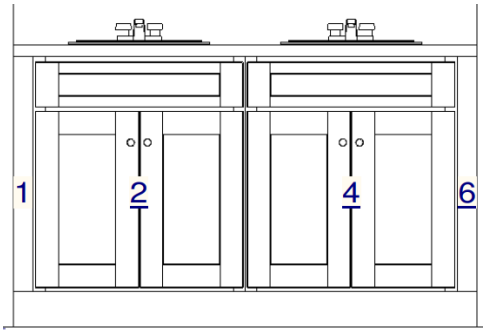
JACK AND JILL BATH