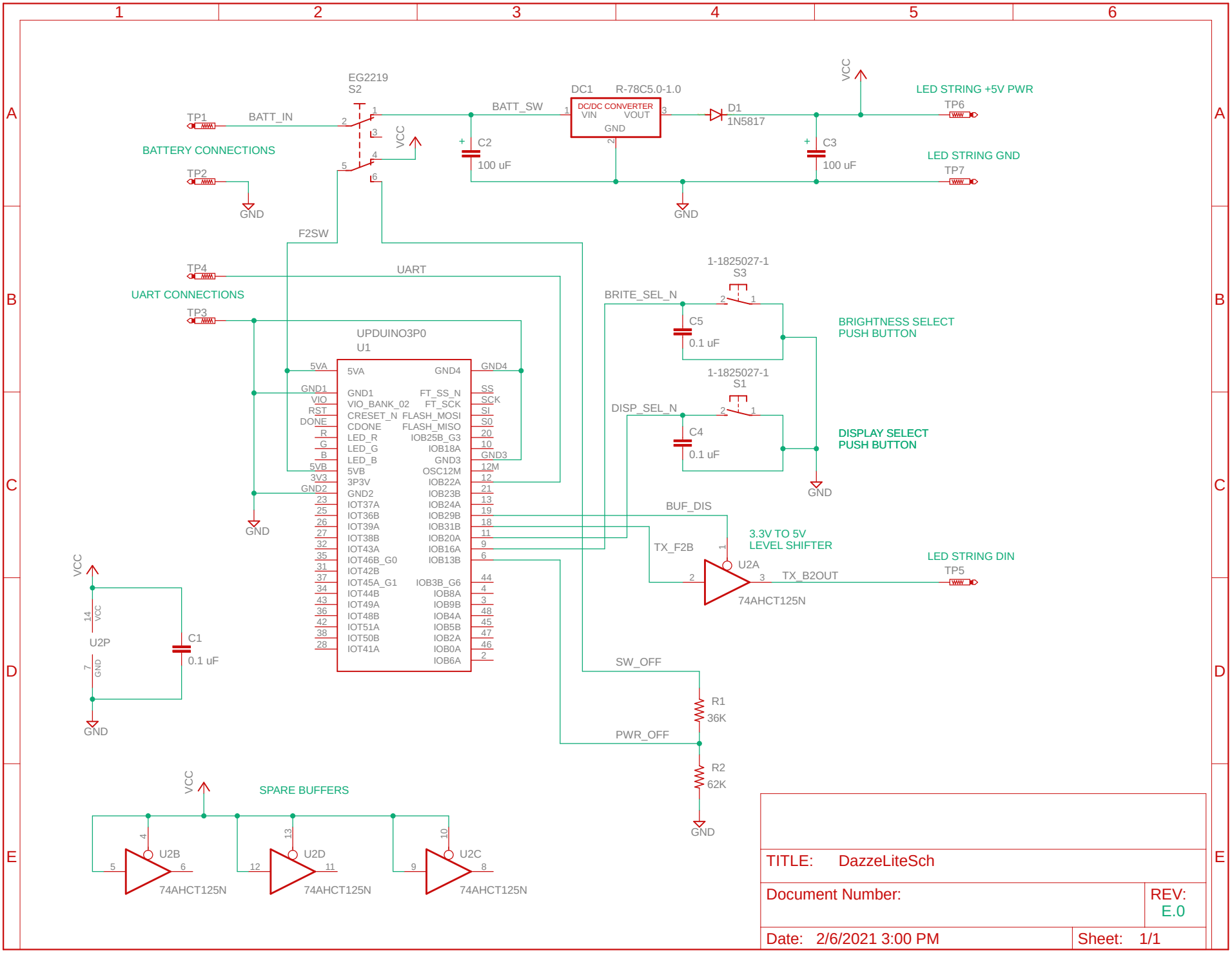
BATTERY CONNECTIONS
TP1
BATT_IN
TP2
GND
EG2219
S2
VCC
F2SW
BATT_SW
C2
100 uF
DC1
R-78C5.0-1.0
DC/DC CONVERTER
VIN
VOUT
GND
D1
1N5817
C3
100 uF
LED STRING +5V PWR
TP6
LED STRING GND
TP7
UART CONNECTIONS
TP4
UART
TP3
UPDUINO3P0
U1
1-1825027-1
S3
BRITE_SEL_N
C5
0.1 uF
BRIGHTNESS SELECT
PUSH BUTTON
1-1825027-1
S1
DISP_SEL_N
C4
0.1 uF
DISPLAY SELECT
PUSH BUTTON
BUF_DIS
3.3V TO 5V
LEVEL SHIFTER
TX_F2B
U2A
TX_B2OUT
74AHCT125N
LED STRING DIN
TP5
U2P
C1
0.1 uF
SW_OFF
R1
36K
PWR_OFF
R2
62K
SPARE BUFFERS
U2B
U2D
U2C
74AHCT125N
TITLE: DazzeLiteSch
Document Number:
REV: E.0
Date: 2/6/2021 3:00 PM
Sheet: 1/1