Ghaith Mhamdi
facebook page: HardSoftRoboticsMh: https://www.facebook.com/profile.php?id=61574058525266
Github: ghaithmhamd: https://github.com/ghaithmhamd

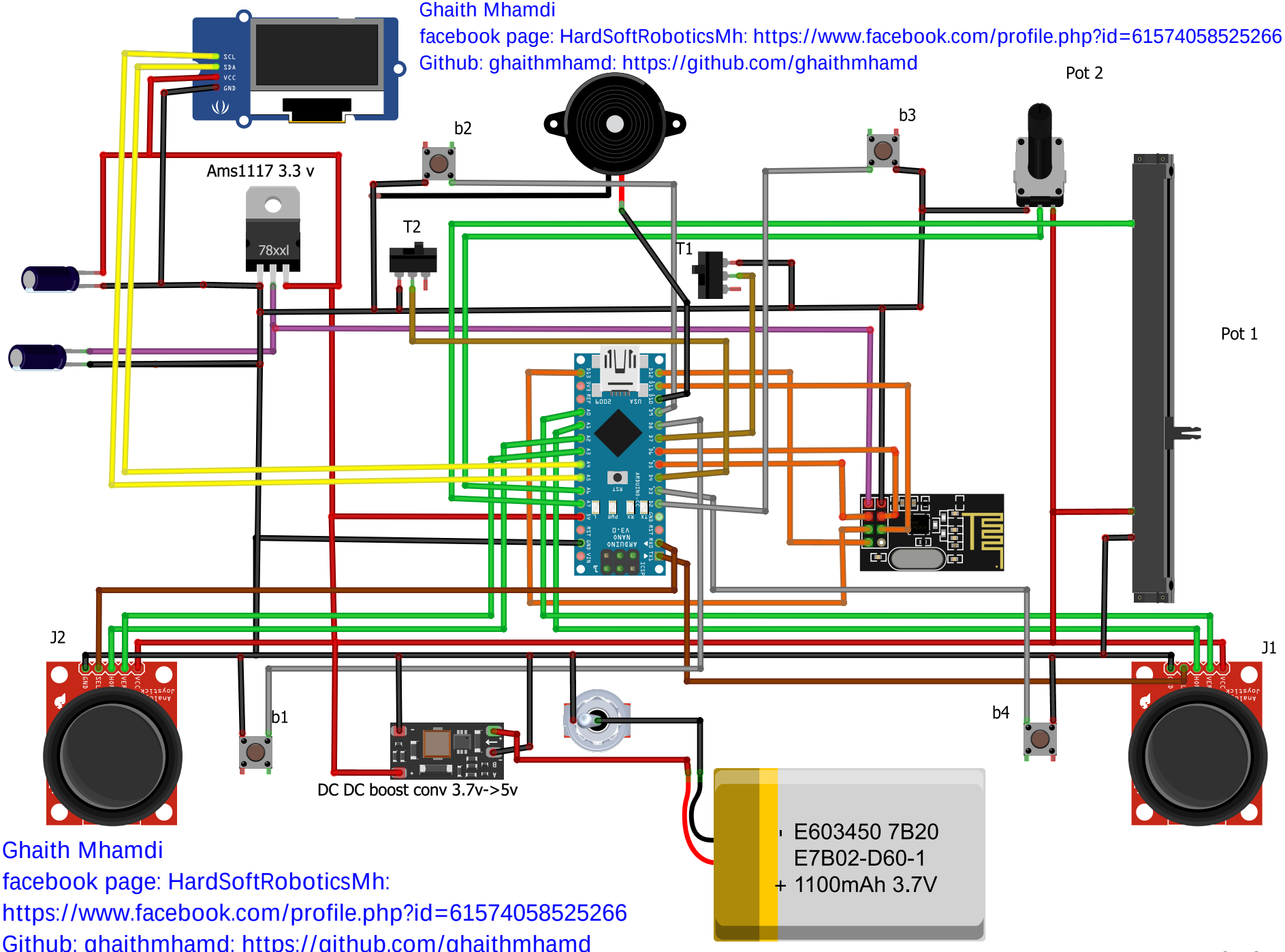

Ghaith Mhamdi
facebook page: HardSoftRoboticsMh:
https://www.facebook.com/profile.php?id=61574058525266
Github: ghaithmhamd: https://github.com/ghaithmhamd

fritzing