Project : MT6768 LPDDR4x Internal
REF_SCH TOP LEVEL

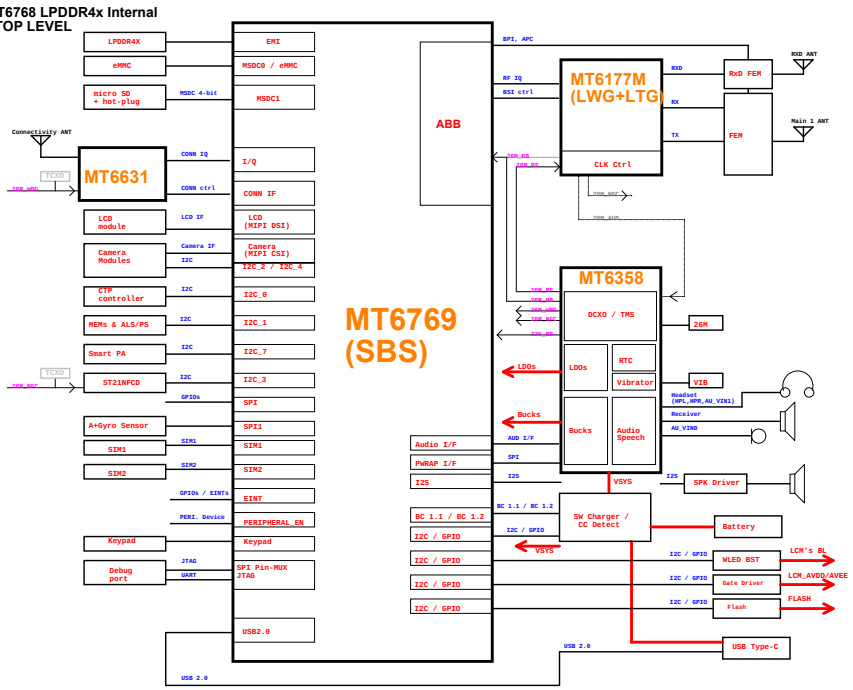


| | | |
|---|---|---|
| 华勤通讯 Huaqin Telecom Technology Com.,Ltd | | |
| Title 01_Block_Diagram | | |
| Size D | Project AL6361A | Rev V1 |
| Date: Monday, August 29, 2022 | Sheet 1 of 99 | |

| I2C | Sub SYS | Function | Part Number | I2C Spec. | Budget Timing | I2C Slave Address / Write / Read (7-bit mode) | |
|---|---|---|---|---|---|---|---|
| I2C-0 | AP | Cap Touch controller | GT1151 | 400 Kbps | Yes. | 0x5D | Write:0xBA / Read:0xBB |
| | | LCM Gate Drive | RT4801HWSC | 400 Kbps | Yes. | | |
| I2C-1 (I3C) | AP Sensor Hub | Magnetic Sensor | AK09918C | 400 Kbps | Yes. | 0x0C | Write:0x18 / Read:0x19 |
| | | Ambient Light Sensor | CM36558 | 400 Kbps | Yes. | 0x51 | Write:0xA2 / Read:0xA3 |
| | | Proximity Sensor | | | | | |
| | | Pressure Sensor | BMP280 | 400 Kbps | Yes. | 0x77 | Write:0xEE / Read:0xEF |
| I2C-2 (I3C) | AP | Rear Camera | IMX519 | 400 Kbps | | 0x1A | Write:0x34 / Read:0x35 |
| | | | EEPROM | 400 Kbps | | 0x50 | Write:0xA0 / Read:0xA1 |
| | | | AF driver | 400 Kbps | | 0x0C | Write:0x18 / Read:0x19 |
| | | Dual cam (B+b) - Main2 | S5K2P7 | 400 Kbps | | 0x2D | Write:0x5A / Read:0x5B |
| | | | EEPROM | 400 Kbps | | 0x50 | Write:0xA0 / Read:0xA1 |
| | | | AF driver | 400 Kbps | | 0x0C | Write:0x18 / Read:0x19 |
| | | | | | | | |
| | | | | | | | |
| I2C-3 | AP | NFC | | | | | |
| | | Audio PA | | | | | |
| | | | | | | | |
| | | | | | | | |
| I2C-4 (I3C) | AP | Front Camera | S5K2T7 | 400 Kbps | | 0x2D | Write:0x5A / Read:0x5B |
| | | | EEPROM | 400 Kbps | | 0x52 | Write:0xA4 / Read:0xA5 |
| | | | AF driver:N/A | | | | |
| I2C-5 | AP | Reserved | | | | | |
| | | | | | | | |
| I2C-6 | AP SSPM | Reserved | | | | | |
| I2C-7 | AP | Audio Smart PA | MT6660 | 400 Kbps | Yes. | 0x34 | Write:0x68 / Read:0x69 |
| | | SW Charger | SW Charger | 400 Kbps | Yes. | | |
| | | CC Detect | RT1715WSC | 400 Kbps | Yes. | | |
| | | Flash LED 5V Boost | RT4505 | 400 Kbps | Yes. | | |
| | | | | | | | |

Note : I2C Spec. : Standard mode (100 kbps) and Fast mode (400 kbps), Fast mode Plus (1 Mbps) and High-speed mode (3.4 Mbps)

<Variant Name>

| | | |
|---|---|---|
| 华勤通讯 Huaqin Telecom Technology Com.,Ltd | | |
| Title 04_Change_Notice | | |
| Size C | Project AL6361A | Rev V1 |
| Date: Monday, August 29, 2022 | Sheet 4 of 99 | |

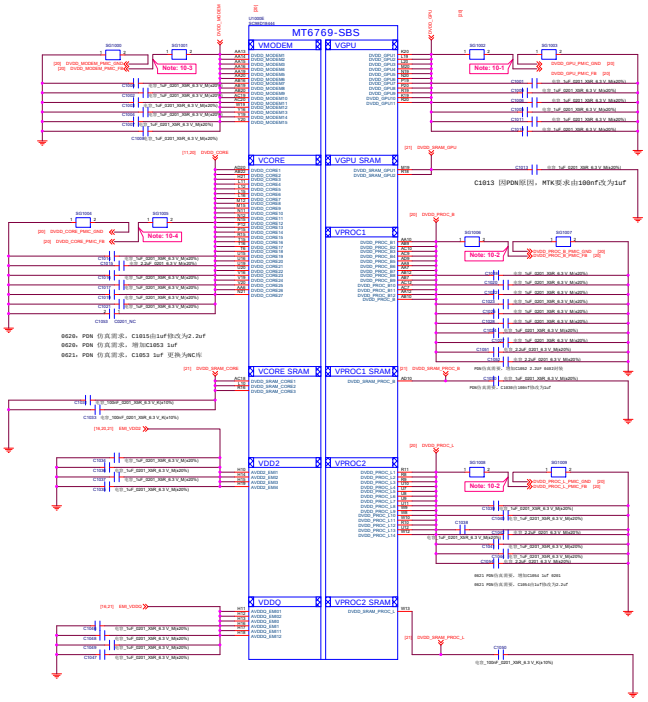


**Schematic design notice of "10_BB_ POWER_PDN" page:**

| | |
|---|---|
| Note 10-1: | Differential pair of DVDD_GPU remote sense must be close to BB's ball.<br>Remote sense trace with GND shielding to PMIC (Differential) |
| Note 10-2: | Differential pair of DVDD_PROC remote sense must be close to BB's ball<br>Remote sense trace with GND shielding to PMIC (Differential) |
| Note 10-3: | Differential pair of DVDD_MODEM remote sense must be close to BB's ball.<br>Remote sense trace with GND shielding to PMIC (Differential) |
| Note 10-4: | Differential pair of DVDD_CORE remote sense must be close to BB's ball.<br>Remote sense trace with GND shielding to PMIC (Differential) |

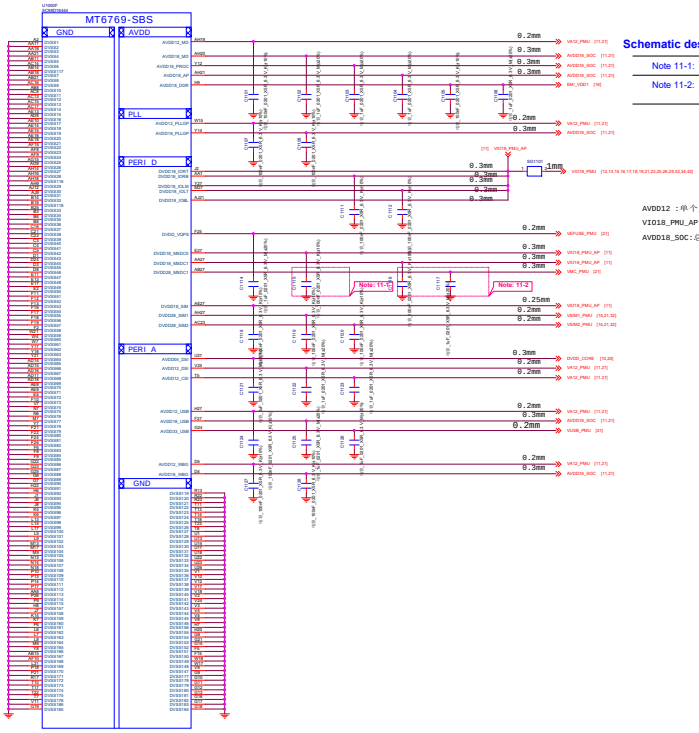


**Schematic design notice of "11_BB_POWER_IO" page:**

Note 11-1: C1115 closed DVDD18_MSDC0 150mil

Note 11-2: C1116 closed DVDD18_MSDC1 150mil
C1117 closed DVDD28_MSDC1 150mil

AVDD12 :单个点走8mil,两路分支各16mil,总路径20mil

VIO18_PMU_AP:总路径40mil

AVDD18_SOC:总路径20mil

| | | | |
|---|---|---|---|
| 华勤通讯 Huaqin Telecom Technology Com.,Ltd | | | |
| Title | 11_BB_POWER_IO | | |
| Size D | Project AL6361A | | Rev V1 |
| Date: Monday, August 29, 2022 | | Sheet 11 of 99 | |

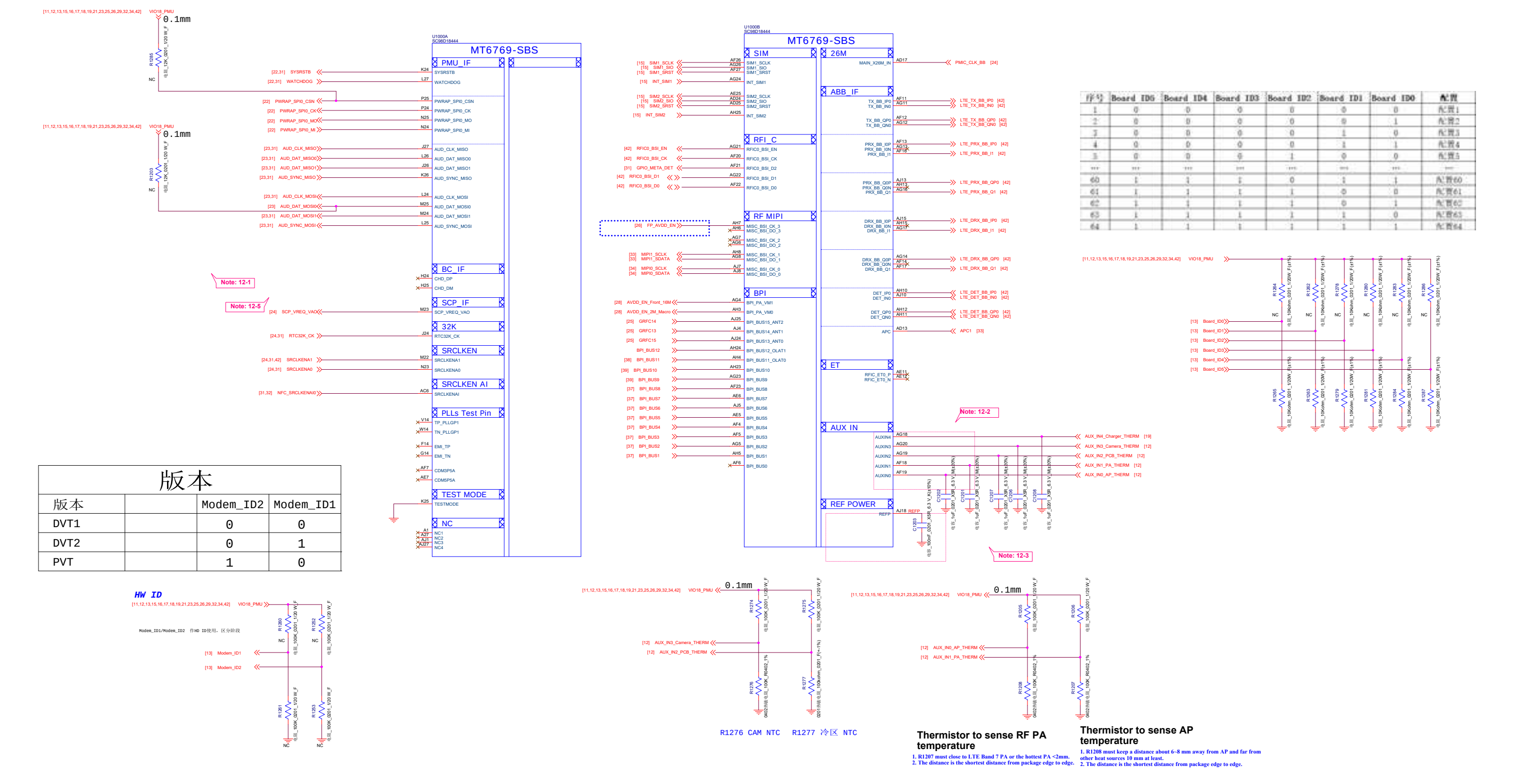


## 版本

| 版本 | | Modem_ID2 | Modem_ID1 |
|---|---|---|---|
| DVT1 | | 0 | 0 |
| DVT2 | | 0 | 1 |
| PVT | | 1 | 0 |

| 序号 | Board ID5 | Board ID4 | Board ID3 | Board ID2 | Board ID1 | Board ID0 | 配置 |
|---|---|---|---|---|---|---|---|
| 1 | 0 | 0 | 0 | 0 | 0 | 0 | 配置1 |
| 2 | 0 | 0 | 0 | 0 | 0 | 1 | 配置2 |
| 3 | 0 | 0 | 0 | 0 | 1 | 0 | 配置3 |
| 4 | 0 | 0 | 0 | 0 | 1 | 1 | 配置4 |
| 5 | 0 | 0 | 0 | 1 | 0 | 0 | 配置5 |
| ... | ... | ... | ... | ... | ... | ... | ... |
| 60 | 1 | 1 | 1 | 0 | 1 | 1 | 配置60 |
| 61 | 1 | 1 | 1 | 1 | 0 | 0 | 配置61 |
| 62 | 1 | 1 | 1 | 1 | 0 | 1 | 配置62 |
| 63 | 1 | 1 | 1 | 1 | 1 | 0 | 配置63 |
| 64 | 1 | 1 | 1 | 1 | 1 | 1 | 配置64 |

## Schematic design notice of "12_BB_1" page:

Note 12-1: PWRAP_SPI0_CSN" and "AUD_DAT_MOSI0" are bootstrap pins to select which interface will be the JTAG pin out

| PWRAP_SPI0_CSN | AUD_DAT_MOSI0 | JTAG Function | |
|---|---|---|---|
| default=PU | default=PD | AP_JTAG | MD_JTAG |
| HI | LO | N/A | N/A |
| HI | HI (by ext. PU) | SPI0 + EINT8 | SPI2 + SPI3 |
| LO (by ext. PD) | LO | SPI0 + EINT8 | N/A |
| LO (by ext. PD) | HI (by ext. PU) | N/A | N/A |

Note 12-2: To shunt a 1uF capacitor in the AUXIN ADC input to prevent noise coupling. It should be placed as close to BB as possible. Connect the unused AUX ADC input to GND.

Note 12-3: The de-coupling cap. for REFP (AJ18 ball) have to be placed as close to BB as possible.

Note 12-4: HW pin for DDR type feature in bootstrap (refer to BB HW design Notice)

| AUD_SYNC_MISO | AUD_CLK_MISO | CAM_PDN3 | PMIC 6358 voltage | DDR Type |
|---|---|---|---|---|
| default=PD | default=PD | default=PD | VDRAM1 / VDRAM2 | DDR |
| No ext. pull | No ext. pull | No ext. pull | 1.125v / 0.6v | LP4X eMCP |
| No ext. pull | 12K pull to VIO18 | No ext. pull | OFF / 1.8v | Reserved |
| 12K pull to VIO18 | No ext. pull | No ext. pull | 1.225v / OFF | LP3 eMCP |
| 12K pull to VIO18 | 12K pull to VIO18 | No ext. pull | 1.125v / 1.8v | Reserved |

Note 12-5: Charger must have D+/D- pin for charger type USB detection.
Charger must have at least 500mA USB current for All charger type.

| | | |
|---|---|---|
| 华勤通讯 Huaqin Telecom Technology Com.,Ltd | | |
| Title 12_BB_1 | | |
| Size D | Project AL6361A | Rev V1 |
| Date: Monday, August 29, 2022 | Sheet 12 of 99 | |

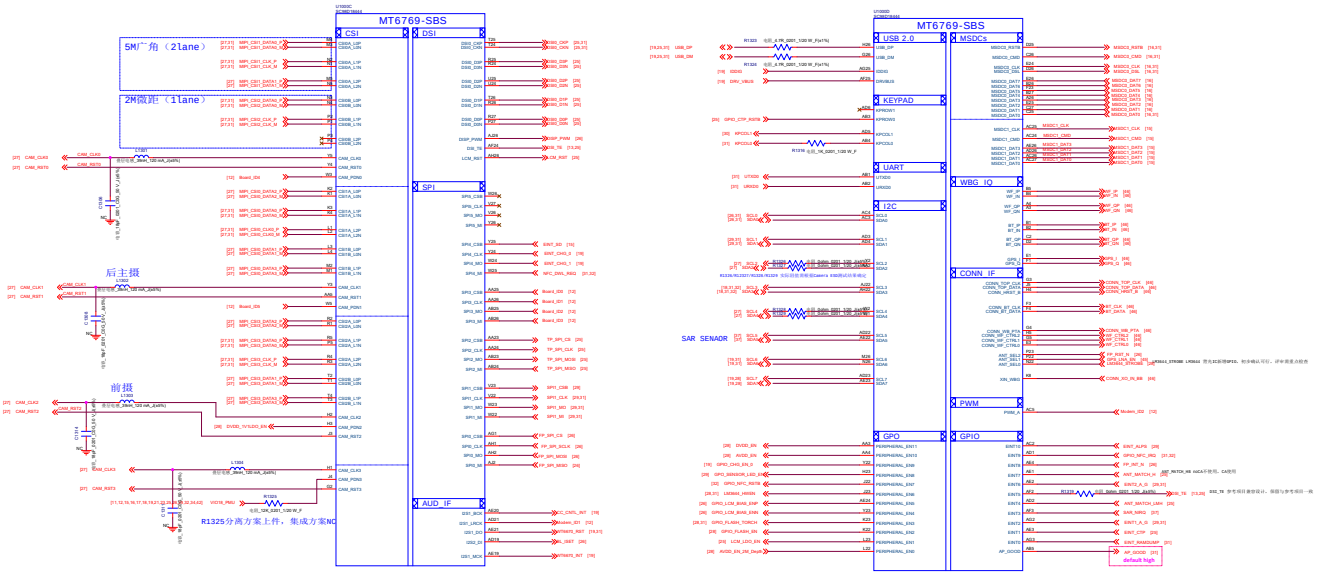


| | | |
|---|---|---|
| 华勤通讯 Huaqin Telecom Technology Com.,Ltd | | |
| Title 13_BB_2 | | |
| Size D | Project AL6361A | Rev V1 |
| Date: Monday, August 29, 2022 | Sheet 13 of 99 | |

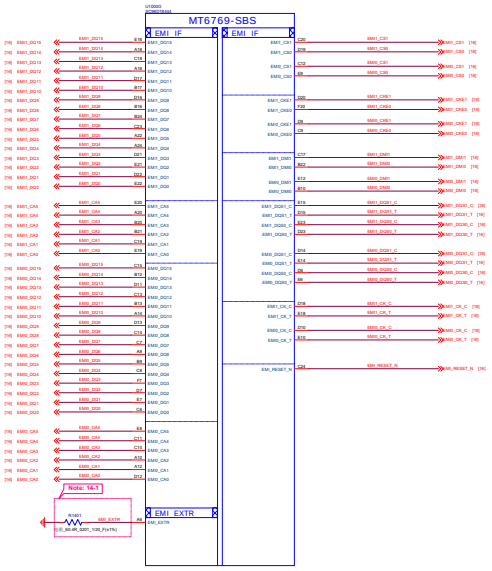


**Schematic design notice of "14_BB_3" page.**

Note 14-1: R1401 please select 60.4 ohm (1%) resistor

| | | |
|---|---|---|
| 华勤通讯 Huaqin Telecom Technology Com.,Ltd | | |
| Title 14_BB_3 | | |
| Size D | Project AL6361A | Rev V1 |
| Date: Monday, August 29, 2022 | Sheet 14 of 99 | |

# 3IN3 SIM1&SIM2&SD

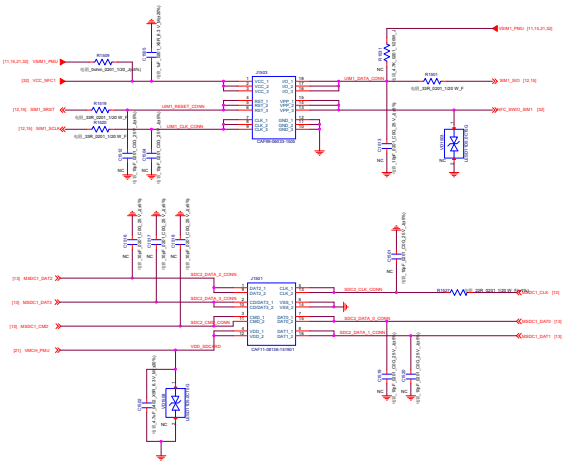

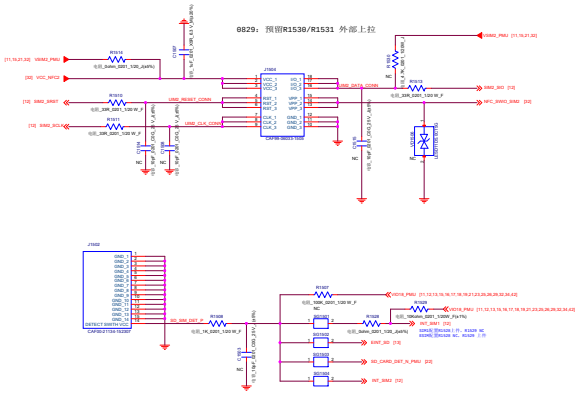


# E-SIM

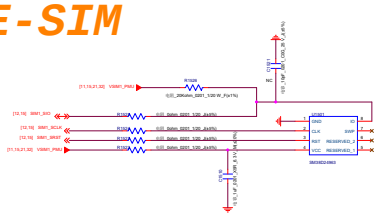

| | | |
|---|---|---|
| 华勤通讯 Huaqin Telecom Technology Com.,Ltd | | |
| Title 15_Memory_SD SIM_Card | | |
| Size D | Project AL6361A | Rev V1 |
| Date: Monday, August 29, 2022 | Sheet 15 of 99 | |

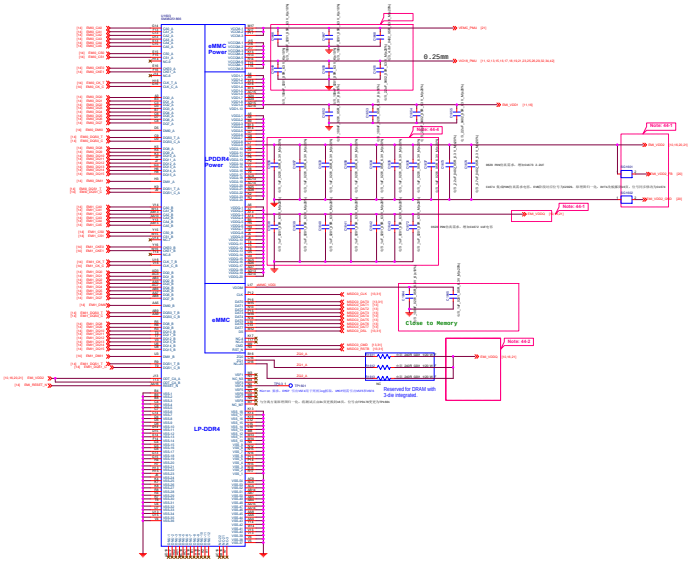


LDO For DDR4

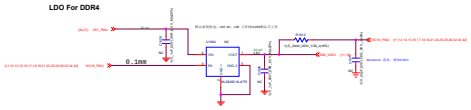


| Schematic design notice of "44_Memory_eMMC_LPDDR4X" |
|---|
| Note 44-1: Please refer to power supply related page select VDRAM 2 / VDRAM1 output voltage properly for LPDDR4X |
| Note 44-2: DRAM ZQx resistor = 240ohm (1%) that must be connected to VDDQ. |
| Note 44-3: Please refer to eMCP vendor's datasheet or MTK common design notice to get the recommendation bypass cap, value for VCC/VCCQ/VDDI power domains of eMMC. |
| Note 44-4: VDD2 VDDQ decoupling cap: closed to DRAM ball. For other cap for PMIC [>10uF, at PMIC page]: please also refer to MMD and layout guide for placement. |

| | | |
|---|---|---|
| 华勤通讯 Huaqin Telecom Technology Com.,Ltd | | |
| Title | 16_Memory_EMMC_LPDDR4X | |
| Size E | Project AL6361A | Rev V1 |
| Date: Monday, August 29, 2022 | Sheet 16 of 99 | |

# Earphone Audio

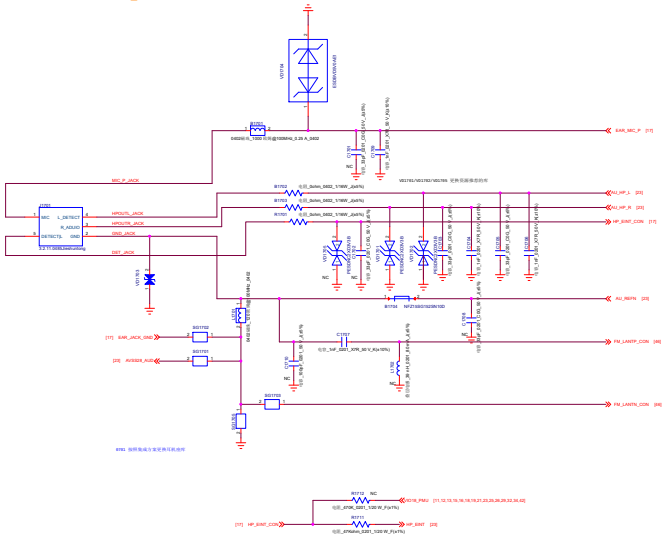

# Main MIC

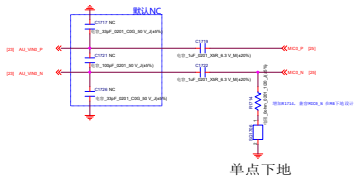


# Slave MIC

低配单MIC，高配双MIC，主板MIC需上件
需要上件时C1718/C1723 仍继续NC

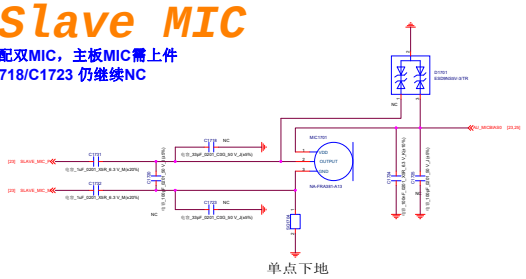


# Earphone Microphone

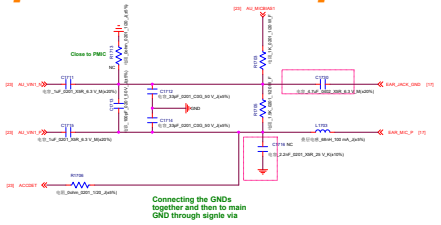


| | | | |
|---|---|---|---|
| 华勤通讯 Huaqin Telecom Technology Com.,Ltd | | | |
| Title | 17_AUDIO_Earphone_MIC | | |
| Size D | Project AL6361A | | Rev v1 |
| Date: Monday, August 29, 2022 | | Sheet 17 of 99 | |

EXTERNAL AUDIO PA

# SPEAKER

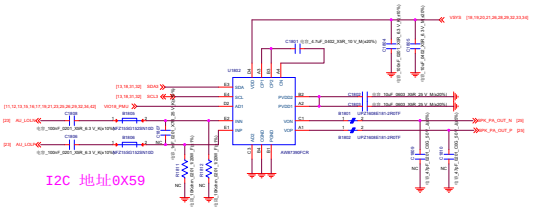


# Receiver

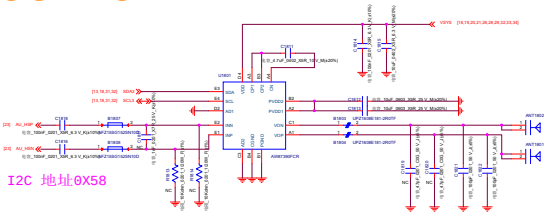


| | | | |
|---|---|---|---|
| 华勤通讯 Huaqin Telecom Technology Com.,Ltd | | | |
| Title | 18_AUDIO_Speaker_Receiver | | |
| Size D | Project AL6361A | | Rev V1 |
| Date: Monday, August 29, 2022 | | Sheet 18 of 99 | |

# Master charge

U1901 主供：SGM41543DYTQF24G/TR
U1901 二供：SC89890HQDLR
U1901 三供：BQ25890H

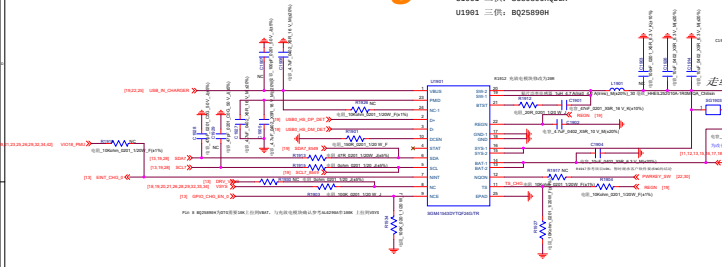

# Slave charge

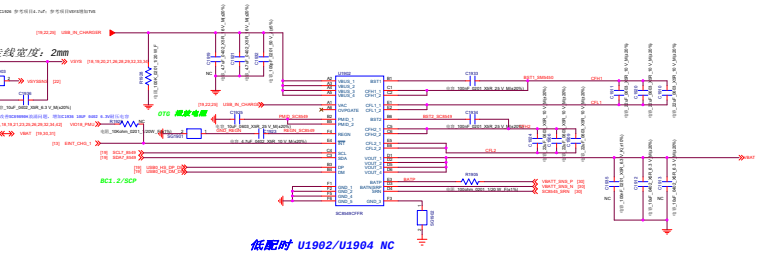


# QC 3.0+

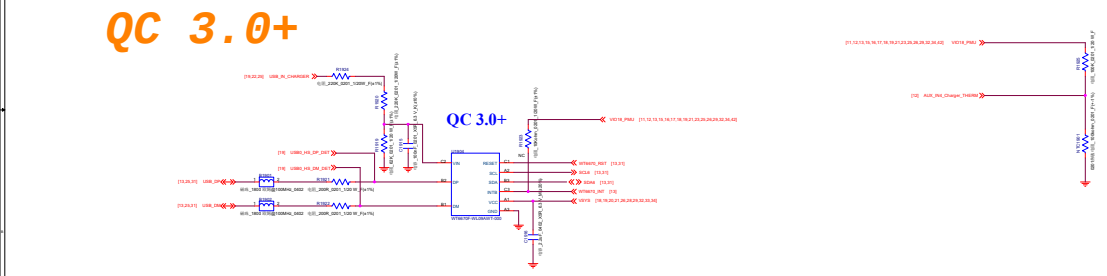


# CC logic

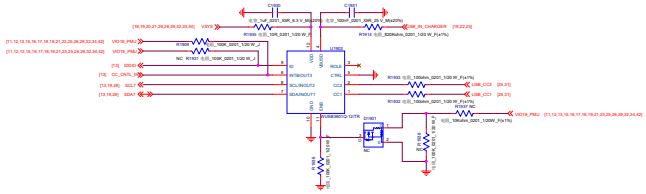

| | | |
|---|---|---|
| 华勤通讯 Huaqin Telecom Technology Com.,Ltd | | |
| Title 19_Charger | | |
| Size D | Project AL6361A | Rev V1 |
| Date: Monday, August 29, 2022 | Sheet 19 of 99 | |

# MT6358 BUCK output

| Input Power | Power Name | Output Voltage (V) | Output Current | Default Voltage |
|---|---|---|---|---|
| BUCK from VSYS | VPA | 0.5-3.4V | 1A | 0.5V |
| | VPROC11 | 0.55-1.1V | 5A | 0.8V |
| | VPROC12 | 0.55-1.1V | 5A | 0.8V |
| | VGPU | 0.55-1.1V | 5A | 0.8V |
| | VCORE | 0.55-1.1V | 5A | 0.8V |
| | VMODEM | 0.45-1.1V | 3.25A | 0.8V |
| | VS1 | 1.86-2.2V | 2A | 2V |
| | VS2 | 1.25-1.5V | 2A | 1.35V |
| | VDRAM1 | 1.225/1.125 | 2A | 1.125 |
| | | | | |
| | | | | |
| | | | | |
| | | | | |
| | | | | |
| | | | | |
| | | | | |
| | | | | |

| IP | Inductance | IDC(A) | |
|---|---|---|---|
| VS1 | 1 | 2.6 | |
| VS2 | 1 | 2.5 | |
| VDRAM | 1 | 2.5 | |
| VPA | 1 | 4 | |
| VMODEM | 1 | 4 | |
| VPROC11 | 0.47 | 5.3 | |
| VPROC12 | 0.47 | 3.85 | |
| VCORE | 0.47 | 5.3 | |
| VGPU | 0.47 | 3.9 | |

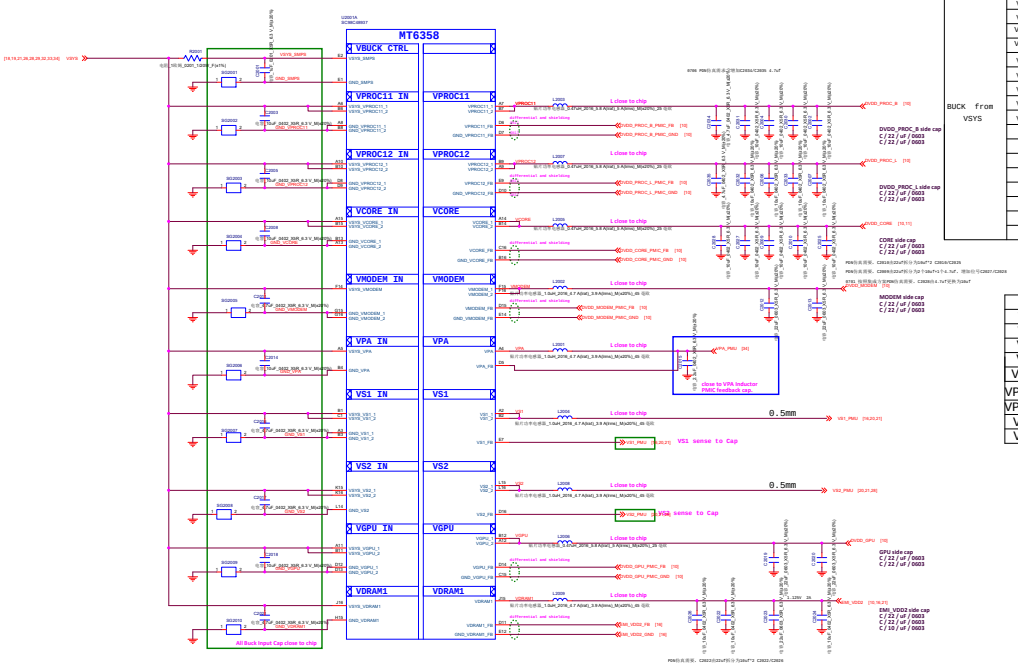


| | | |
|---|---|---|
| 华勤通讯 Huaqin Telecom Technology Com.,Ltd | | |
| Title | 20_POWER_MT6358_Buck | |
| Size D | Project AL6361A | Rev V1 |
| Date: Monday, August 29, 2022 | Sheet 20 of 99 | |

# MT6358 LDO output

| Input Power | Power Name | Output Voltage (V | Output Current | Default Voltage |
|---|---|---|---|---|
| LDO from VSYS | VFE28 | 2.8 | 50mA | 2.8V |
| | VA22 | 2.24 | 50mA | 2.24V |
| | VCN28 | 2.8 | 50mA | 2.8V |
| | VCAMA | 1.8/2.5/2.8 | 200mA | 2.8V |
| | VAUX18 | 1.8 | 200mA | 1.8V |
| | VAUD28 | 2.8 | 50mA | 2.8V |
| | VBIF28 | 2.8 | 1mA | 2.8V |
| | VCN33 | 3.3/3.4/3.5/3.6 | 800mA | 3.5V |
| | VLDO28 | 2.8/3.0 | 300mA | 2.8V |
| | VIO28 | 2.8 | 200mA | 2.8V |
| | VMC | 1.86/2.9/3.0/3.3 | 200mA | 3.0V |
| | VMCH | 2.9/3.0/3.3 | 800mA | 3.0V |
| | VEMC | 2.9/3.0/3.3 | 800mA | 3.3V |
| | VSIM1 | 1.7/1.8/1.86/2.76/3.0/3. | 200mA | 1.86V |
| | VSIM2 | 1.7/1.8/1.86/2.76/3.0/3. | 200mA | 1.86V |
| | VIBR | 1.2/1.3/1.5/1.8/2.8/2.8/3.3 | 200mA | 2.8V |
| | VUSB | 3.07 | 200mA | 3.07V |
| LDO from VS1 | VRF18 | 1.81 | 450mA | 1.81V |
| | VRIO18 | 1.71/1.8/1.84 | 300mA | 1.84V |
| | VCN18 | 1.8 | 300mA | 1.8V |
| | VCAMD | 1/1.05/1.1/1.2/1.3/1.5/1.8 | 600mA | 1.2V |
| | VCAMIO | 1.8 | 300mA | 1.8V |
| | VIO18 | 1.8 | 700mA | 1.8V |
| LDO from VS2 | VRF12 | 1.2 | 800mA | 1.2V |
| | VA12 | 1.2 | 300mA | 1.2V |
| | VSRAM_PROC11 | 0.6-1.2 | 600mA | 1.2V |
| | VSRAM_OTHERS | 0.55-1.2 | 600mA | 0.9V |
| | VSRAM_GPU | 0.65-1.2 | 600mA | 0.9V |
| | VDRAM2 | 0.6/1.8 | 600/100mA | 0.6v |
| | VSRAM_PROC12 | 0.6-1.2 | 600mA | 1.2V |

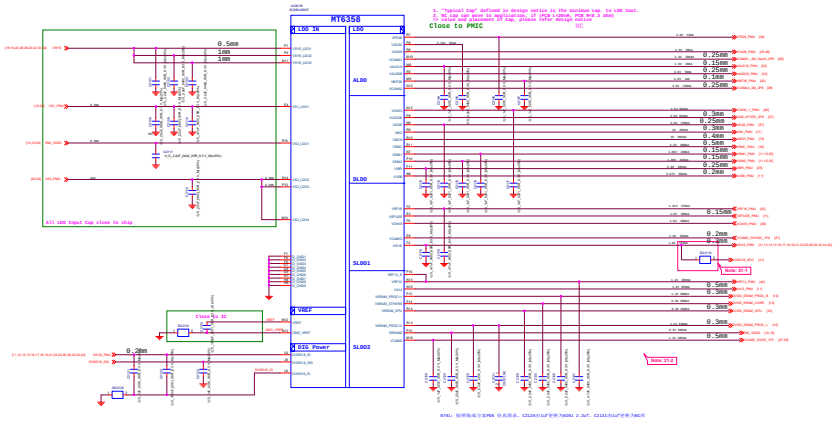


**Schematic design notice of "21_POWER_MT6358-LDO" page.**

Note 21-1: Please set SG2110 close to C2118, making star connection between VIO18_PMU and AVDD18_SOC near to LDO cap. C2118
Please also refer to MT6358 design notice for further detail design information

Note 21-2: If these power trace can meet LDO layout constraint, these CAP can be NC or removed.
Please refer to MT6358 design notice.

| | | | |
|---|---|---|---|
| 华勤通讯 Huaqin Telecom Technology Com.,Ltd | | | |
| Title | 21_POWER_MT6358_LDO | | |
| Size E | Project AL6361A | | Rev V1 |
| Date: Monday, August 29, 2022 | | Sheet 21 of 99 | |

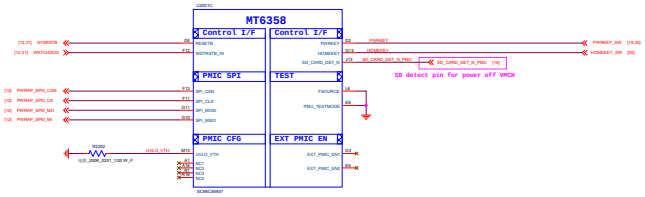


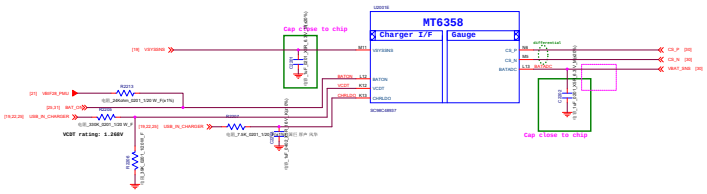


| | | |
|---|---|---|
| 华勤通讯 Huaqin Telecom Technology Com.,Ltd | | |
| Title 22_POWER_MT6358_IF | | |
| Size D | Project AL6361A | Rev V1 |
| Date: Monday, August 29, 2022 | Sheet 22 of 99 | |

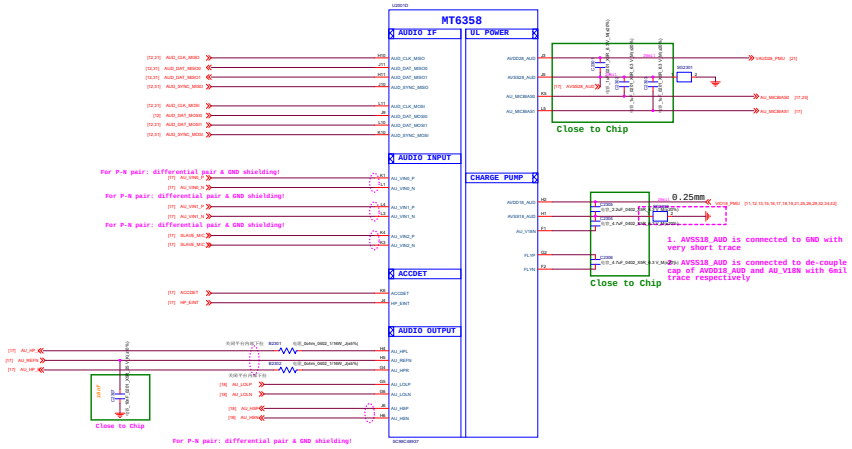


| | | |
|---|---|---|
| 华勤通讯 Huaqin Telecom Technology Com.,Ltd | | |
| Title 23_POWER_MT6358_Audio | | |
| Size D | Project AL6361A | Rev V1 |
| Date: Monday, August 29, 2022 | Sheet 23 of 99 | |

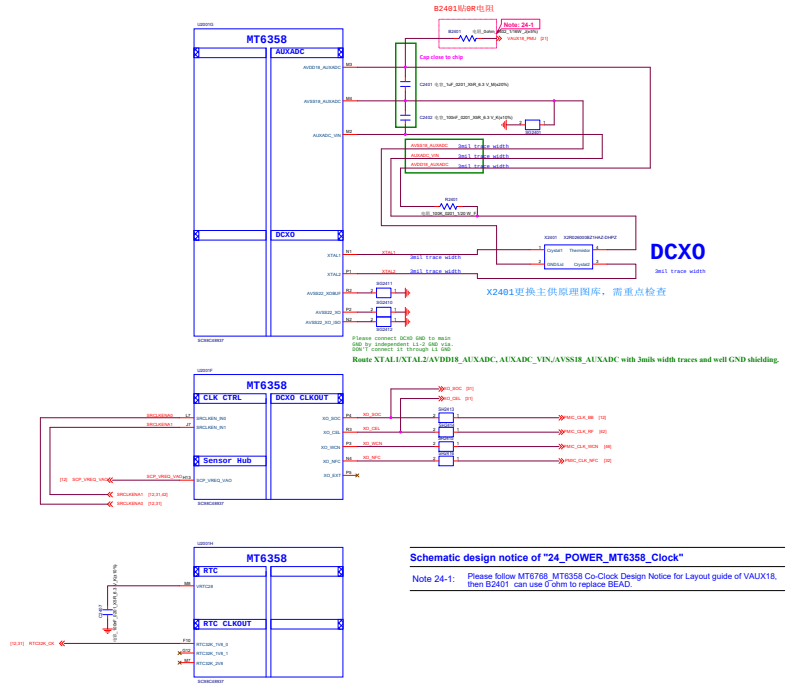


**Schematic design notice of "24_POWER_MT6358_Clock"**

| | |
|---|---|
| Note 24-1: | Please follow MT6768_MT6358 Co-Clock Design Notice for Layout guide of VAUX18, then B2401 can use 0 ohm to replace BEAD. |

| | | | |
|---|---|---|---|
| 华勤通讯 Huaqin Telecom Technology Com.,Ltd | | | |
| Title | 24_POWER_MT6358_Clock | | |
| Size D | Project AL6361A | | Rev V1 |
| Date: Monday, August 29, 2022 | | Sheet 24 of 99 | |

# LINK

LINK 线序待KB线序最终确定后根据KB线序做调整

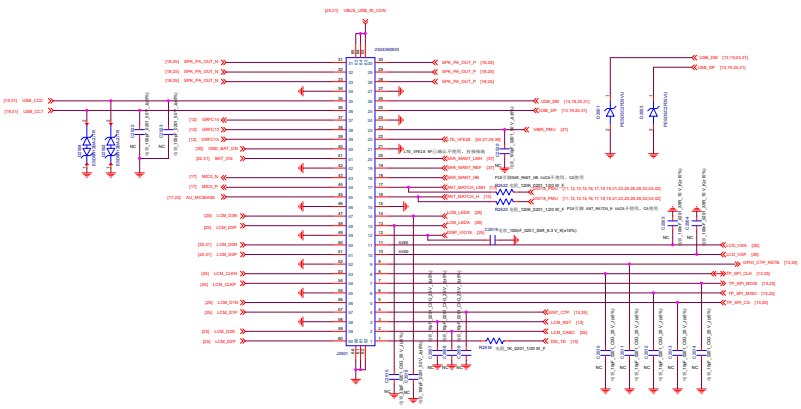

LCD MIPI Common Mode Filter

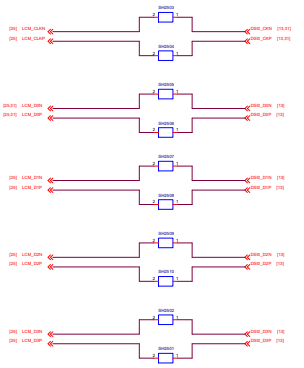

# OVP

OVP参考AL9260A AW32905 更换OVP库

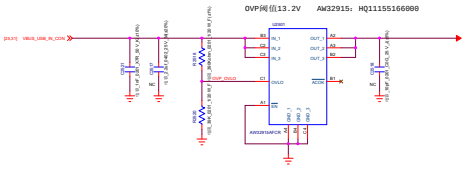


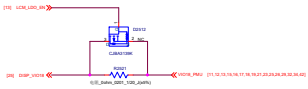

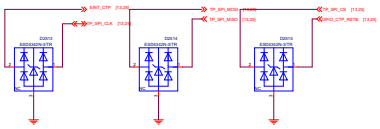

| | | |
|---|---|---|
| 华勤通讯 Huaqin Telecom Technology Com.,Ltd | | |
| Title 25_LINK_OVP | | |
| Size D | Project AL6361A | Rev V1 |
| Date: Monday, August 29, 2022 | Sheet 25 of 99 | |

# LCM Backlight

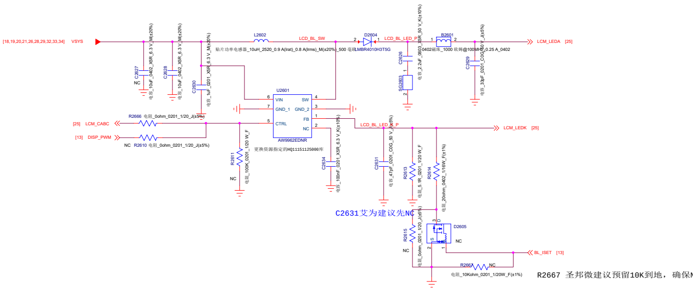

C2631艾为建议先NC

R2667 圣邦微建议预留10K到地，确保N-MOS默认关断

D2605 NC，R2615上件 正常模式BL_ISET为高阻态，高亮模式 BL_ISET为低

D2605上件，R2615 NC 正常模式BL_ISET为低，高亮模式 BL_ISET为高

# LCM Bias

偏压电路参考milan2

按照资源推荐型号更换U2602封装库，然后结合SPC修改外围匹配。

OCP2131 HQ11152662000 /TPS65132 HQ11140016000

| 厂家 | I2C ADDRESS |
|---|---|
| OCP2131 | 0111110 binary (or 3Eh) |
| NT50358CG | 0111110 binary (or 3Eh) |

C2607硒致微要求最小10uf

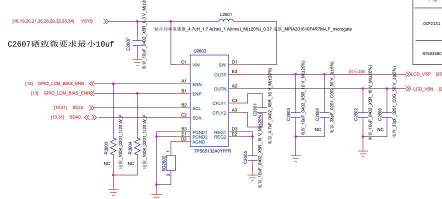

# Finger Print

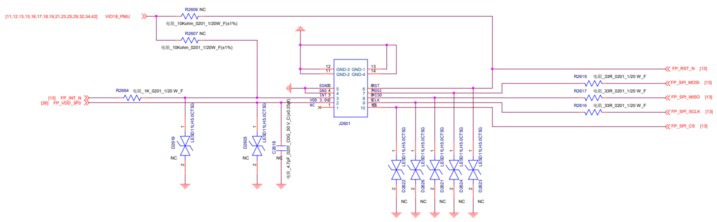

FP AVDD 3.0V LDO

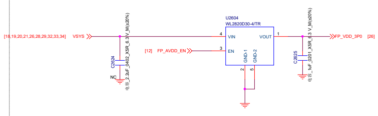

| 华勤通讯 Huaqin Telecom Technology Com.,Ltd | | |
|---|---|---|
| Title | 26_LCD_BL_BIAS_Finger | |
| Size D | Project AL6361A | Rev V1 |
| Date: Monday, August 29, 2022 | Sheet 26 of 99 | |

# Main Camera 50M_OIS

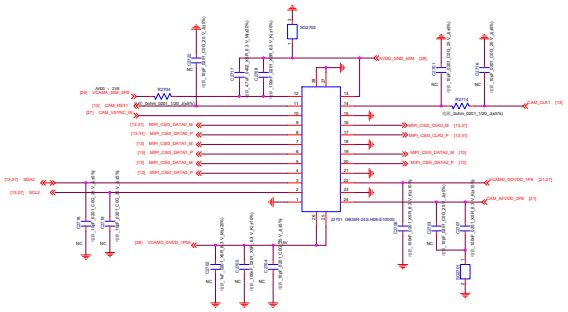

# 2M =Macro

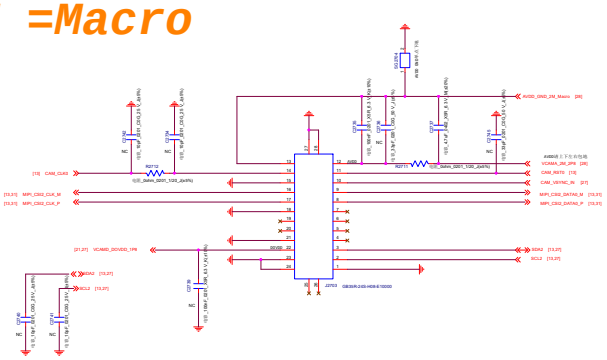

# 2M Depth ★NOTE:低配2M J2702上件

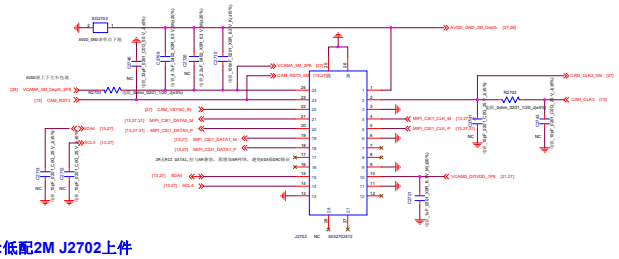

# Front CAM 16M/8M

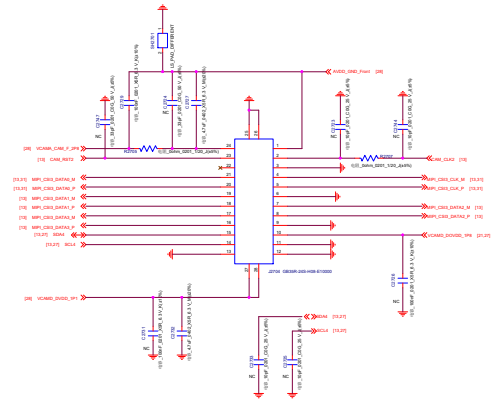

# 5M Wide ★NOTE:低配2M J2702上件

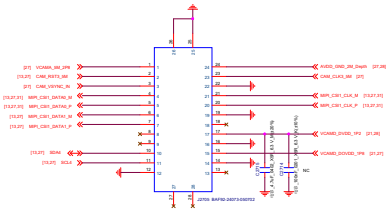

| | | |
|---|---|---|
| 华勤通讯 Huaqin Telecom Technology Com.,Ltd | | |
| Title | 27_Camera | |
| Size D | Project AL6361A | Rev V1 |
| Date: Monday, August 29, 2022 | Sheet 27 of 99 | |

# Rear CAM FLASH

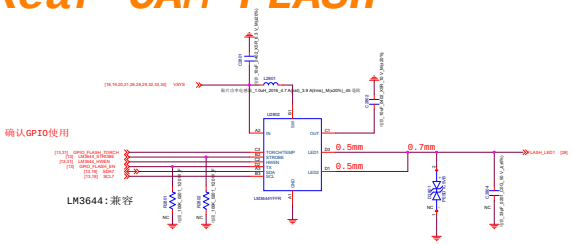


## Flash LED

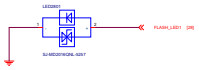

## LDO For Camera AVDD 50M 2.8V

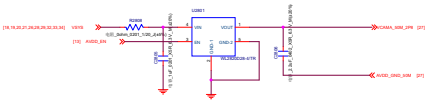

## LDO For Camera AVDD Front 16M/8M 2.8V

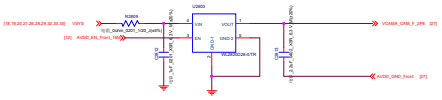

## LDO For CAM DVDD Front 16M 1.1V HQ11154597000, LDO_1.1_500 mA

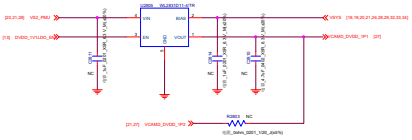

高配 16M R2803 NC，U2805上件，C2814 NC
低配 8M R2803 上件，U2805及外围匹配NC

## LDO For Camera DVDD 50M 1.05V

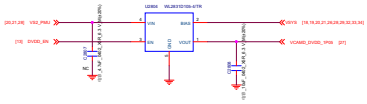

## LDO For Camera AVDD 2M Macro 2.8V 预留外部LDO

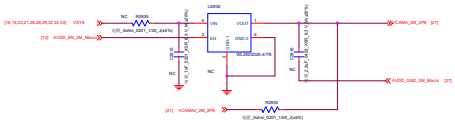

## LDO For Camera AVDD 2M Depth 2.8V 预留外部LDO

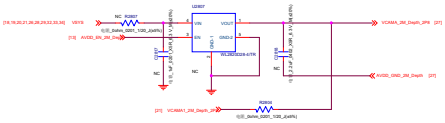

| | | | |
|---|---|---|---|
| 华勤通讯 Huaqin Telecom Technology Com.,Ltd | | | |
| Title | 28_Camera_Flash_Powers_LDO | | |
| Size D | Project AL6361A | | Rev V1 |
| Date: Monday, August 29, 2022 | | Sheet 28 of 99 | |

## M-Sensor

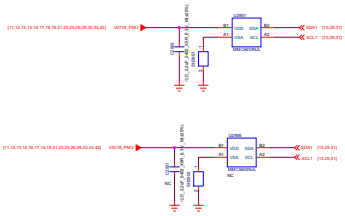

| 厂家 | I2C ADDRESS |
|---|---|
| AKM09IC | 0ch |

## Accerometer + Gyro Sensor

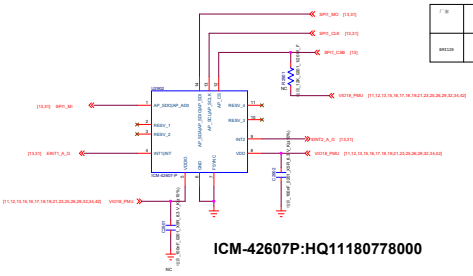

| 厂家 | I2C ADDRESS |
|---|---|
| BMI120 | 0x68 |

ICM-42607P:HQ11180778000

## ALPS SENSOR

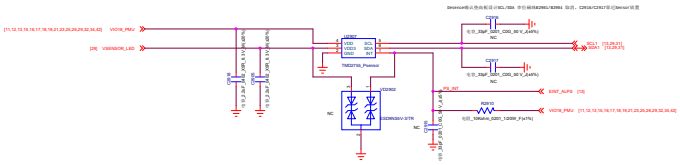

G Sensor OD0.7更新不需要再兼容，删除单 G sensor

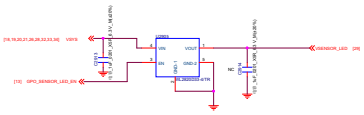

| | | |
|---|---|---|
| 华勤通讯 Huaqin Telecom Technology Com.,Ltd | | |
| Title 29_Sensors | | |
| Size D | Project AL6361A | Rev V1 |
| Date: Monday, August 29, 2022 | Sheet 29 of 99 | |

# BATT CON

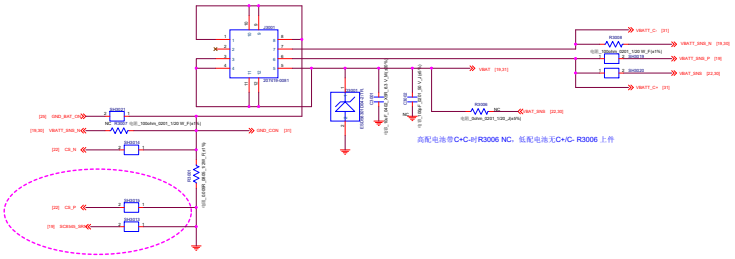


# KEY

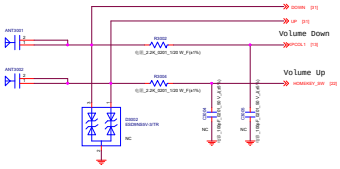


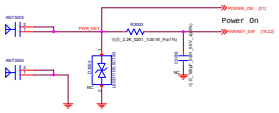


| | | | |
|---|---|---|---|
| 华勤通讯 Huaqin Telecom Technology Com.,Ltd | | | |
| Title | 30_BAT_Key | | |
| Size D | Project AL6361A | | Rev V1 |
| Date: Monday, August 29, 2022 | | Sheet 30 of 99 | |

## MEMORY 测试点

## Camera 测试点

## KEY 测试点

## NFC 测试点

## Charger 测试点

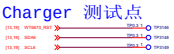

## CLK 测试点

## LCM 测试点靠近连接器端放置

## Battery 测试点

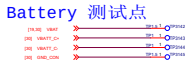

## 闪光灯驱动IC 测试点

## Sensor 测试点

## RAMDUMP debug key

强制加载点

## META测试点

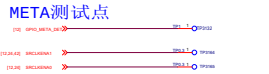

## 音频 测试点

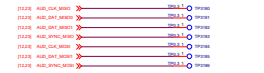

## 屏蔽罩

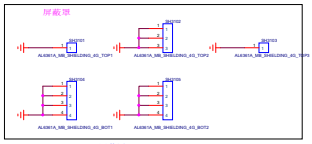

SH3101 RF PA 屏蔽罩
SH3102 BB CPU+DDR 屏蔽罩
SH3103 RF WCN屏蔽罩
SH3104 BB PMU+EMMC 屏蔽罩
SH3105 RF PRX/DRX 屏蔽罩

## MARK

接地弹片

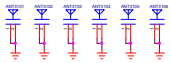

金属DECO接地弹片

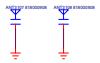

| | | |
|---|---|---|
| 华勤通讯 Huaqin Telecom Technology Com.,Ltd | | |
| Title 31_Testpoint_Debug | | |
| Size D | Project AL6361A | Rev V1 |
| Date: Monday, August 29, 2022 | Sheet 31 of 99 | |

NFC

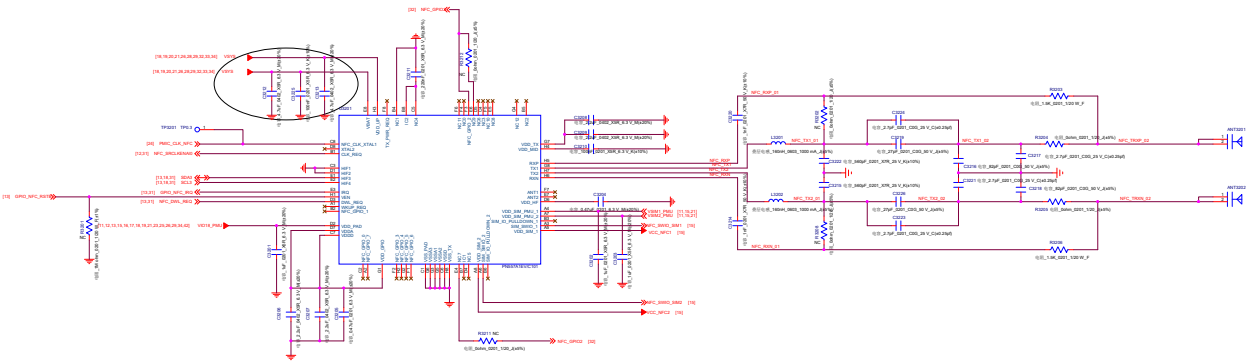

| | | | |
|---|---|---|---|
| 华勤通讯 Huaqin Telecom Technology Com.,Ltd | | | |
| Title | 32_NFC | | |
| Size D | Project AL6361A | | Rev V0 |
| Date: Monday, August 29, 2022 | | Sheet 32 of 99 | |

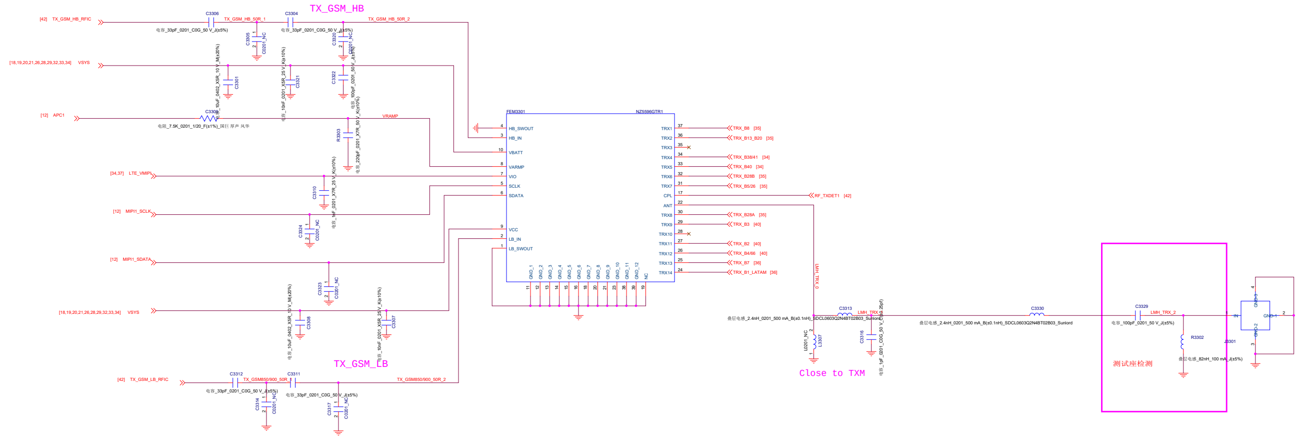


NOT TO BE USED, COPIED, REPRODUCED IN WHOLE OR IN PART, NOR ITS CONTENTS REVEALED IN ANY MANNER TO OTHERS WITHOUT THE EXPRESS WRITTEN PERMISSION OF QUALCOMM.

THIS TECHNICAL DATA MAY BE SUBJECT TO U.S. AND INTERNATIONAL EXPORT, RE-EXPORT OR TRANSFER ("EXPORT") LAWS. DIVERSION CONTRARY TO U.S. AND INTERNATIONAL LAW IS STRICTLY PROHIBITED.

Copyright (C) 2016 QUALCOMM Technologies,Inc.
All rights reserved

CONFIDENTIAL AND PROPRIETARY-QUALCOMM TECHNOLOGIES, INC.

QUALCOMM IS A REGISTERED TRADEMARK OF QUALCOMM INCORPORATED IN THE UNITED STATES AND MAY BE REGISTERED IN OTHER COUNTRIES. OTHER PRODUCT AND BRAND NAMES MAY BE TRADEMARKS OR REGISTERED TRADEMARKS OF THEIR RESPECTIVE OWNERS.

QUALCOMM Technologies,Inc.
5775 Morehouse Drive
San Diego, CA 92121-1714
U.S.A.

Title: SCHEMATIC, CCA, MAIN, QRD8953_2-4-2, DVT1.1

| Size | Sheet Name | Rev |
|---|---|---|
| D | Eplus | V1 |

Date: Monday, August 29, 2022 | Sheet 33 of 99

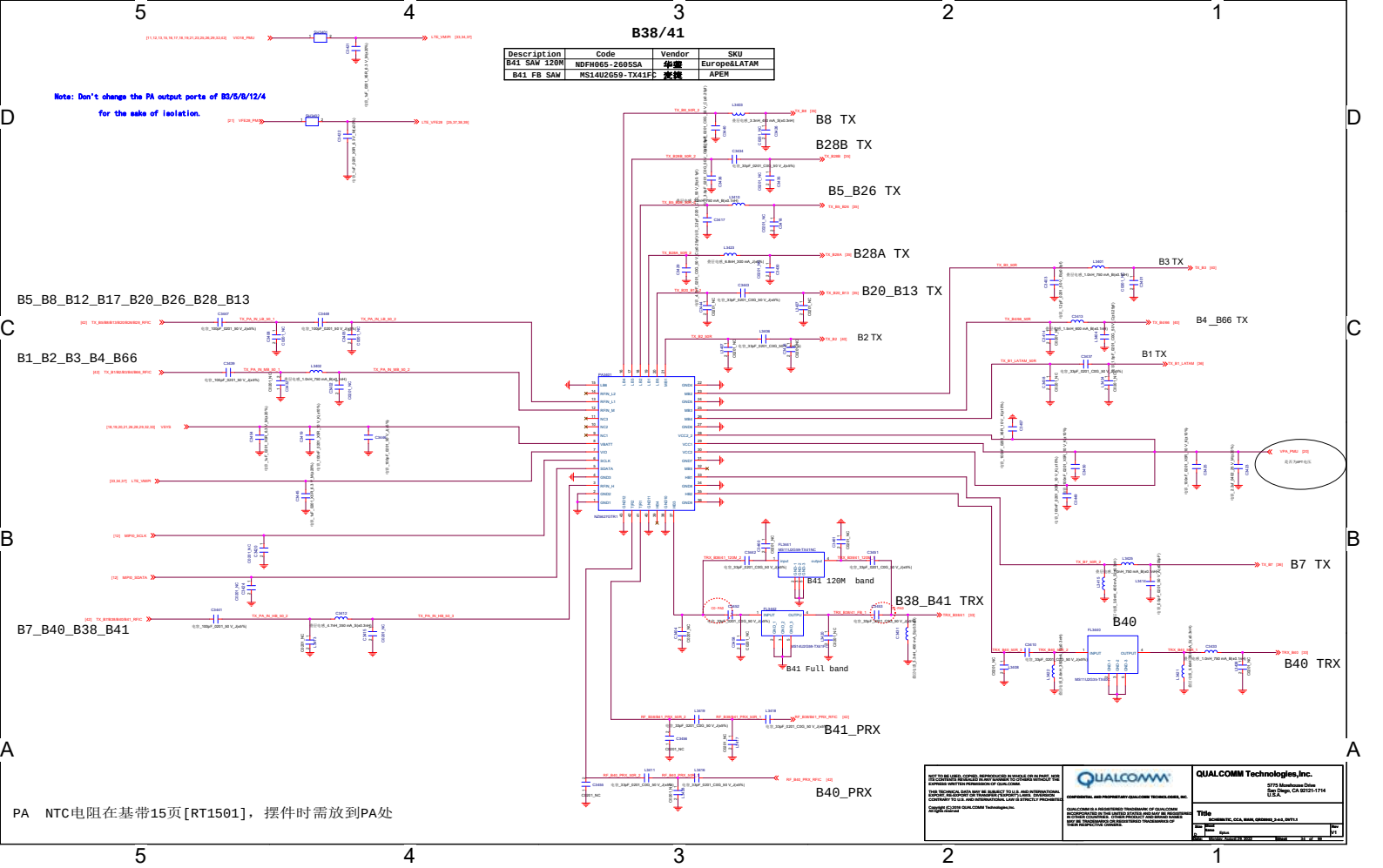


PA NTC电阻在基带15页[RT1501]，摆件时需放到PA处

# B20/13 DPX

| Description | Code | Vendor | SKU |
|---|---|---|---|
| B20 DPX | SFX806CYH02 | Wisol | Europe&APEM |
| B13 DPX | D5DA782M0K2J6-Z | Taiyo | LATAM |

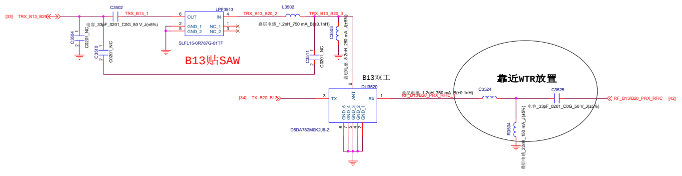


# B8 DPX

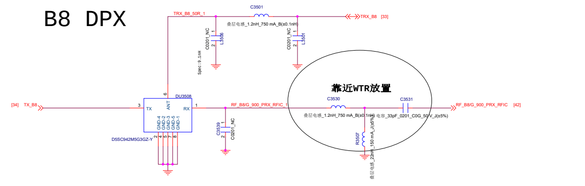


# B28B DPX

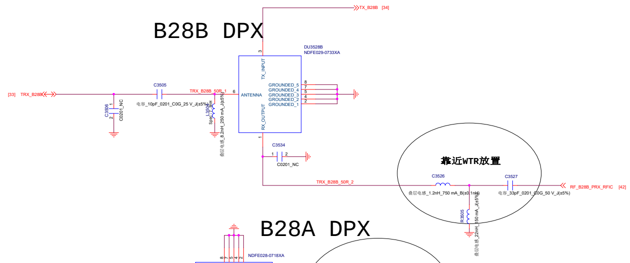


# B28A DPX

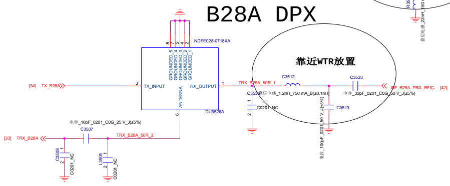


| Description | Code | Vendor | SKU |
|---|---|---|---|
| B26 DPX | SAYEY831MBA0B0AR00 | MURATA | LATAM&APEM |
| B5 DPX | HDDB05CNSS-B11 | 好达 | Europe |

# B5_B26 DPX

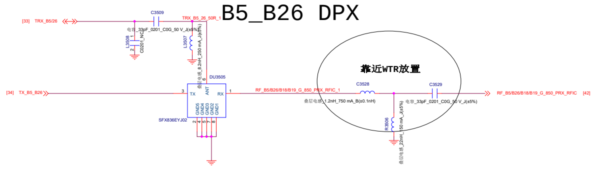


NOT TO BE USED, COPIED, REPRODUCED IN WHOLE OR IN PART, NOR ITS CONTENTS REVEALED IN ANY MANNER TO OTHERS WITHOUT THE EXPRESS WRITTEN PERMISSION OF QUALCOMM.

THIS TECHNICAL DATA MAY BE SUBJECT TO U.S. AND INTERNATIONAL EXPORT, RE-EXPORT OR TRANSFER ("EXPORT") LAWS. DIVERSION CONTRARY TO U.S. AND INTERNATIONAL LAW IS STRICTLY PROHIBITED.

Copyright (C) 2016 QUALCOMM Technologies,Inc.
All rights reserved

CONFIDENTIAL AND PROPRIETARY-QUALCOMM TECHNOLOGIES, INC.

QUALCOMM IS A REGISTERED TRADEMARK OF QUALCOMM INCORPORATED IN THE UNITED STATES AND MAY BE REGISTERED IN OTHER COUNTRIES. OTHER PRODUCT AND BRAND NAMES MAY BE TRADEMARKS OR REGISTERED TRADEMARKS OF THEIR RESPECTIVE OWNERS.

QUALCOMM Technologies,Inc.
5775 Morehouse Drive
San Diego, CA 92121-1714
U.S.A.

Title: SCHEMATIC, CCA, MAIN, QRD8953_2-4-2, DVT1.1
Size: D | Sheet Name: Eplus | Rev: V1
Date: Monday, August 29, 2022 | Sheet 35 of 99

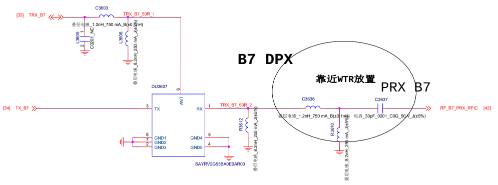


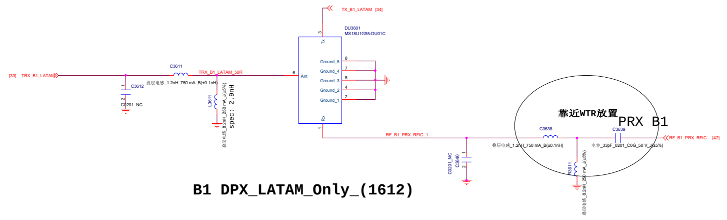



NOT TO BE USED, COPIED, REPRODUCED IN WHOLE OR IN PART, NOR ITS CONTENTS REVEALED IN ANY MANNER TO OTHERS WITHOUT THE EXPRESS WRITTEN PERMISSION OF QUALCOMM.

THIS TECHNICAL DATA MAY BE SUBJECT TO U.S. AND INTERNATIONAL EXPORT, RE-EXPORT OR TRANSFER ("EXPORT") LAWS. DIVERSION CONTRARY TO U.S. AND INTERNATIONAL LAW IS STRICTLY PROHIBITED.

Copyright (C) 2016 QUALCOMM Technologies,Inc.
All rights reserved

CONFIDENTIAL AND PROPRIETARY-QUALCOMM TECHNOLOGIES, INC.

QUALCOMM IS A REGISTERED TRADEMARK OF QUALCOMM INCORPORATED IN THE UNITED STATES AND MAY BE REGISTERED IN OTHER COUNTRIES. OTHER PRODUCT AND BRAND NAMES MAY BE TRADEMARKS OR REGISTERED TRADEMARKS OF THEIR RESPECTIVE OWNERS.



QUALCOMM Technologies,Inc.
5775 Morehouse Drive
San Diego, CA 92121-1714
U.S.A.


Title
SCHEMATIC, CCA, MAIN, QRD8953_2-4-2, DVT1.1

| Size | Sheet Name | Rev |
| --- | --- | --- |
| D | Eplus | V1 |

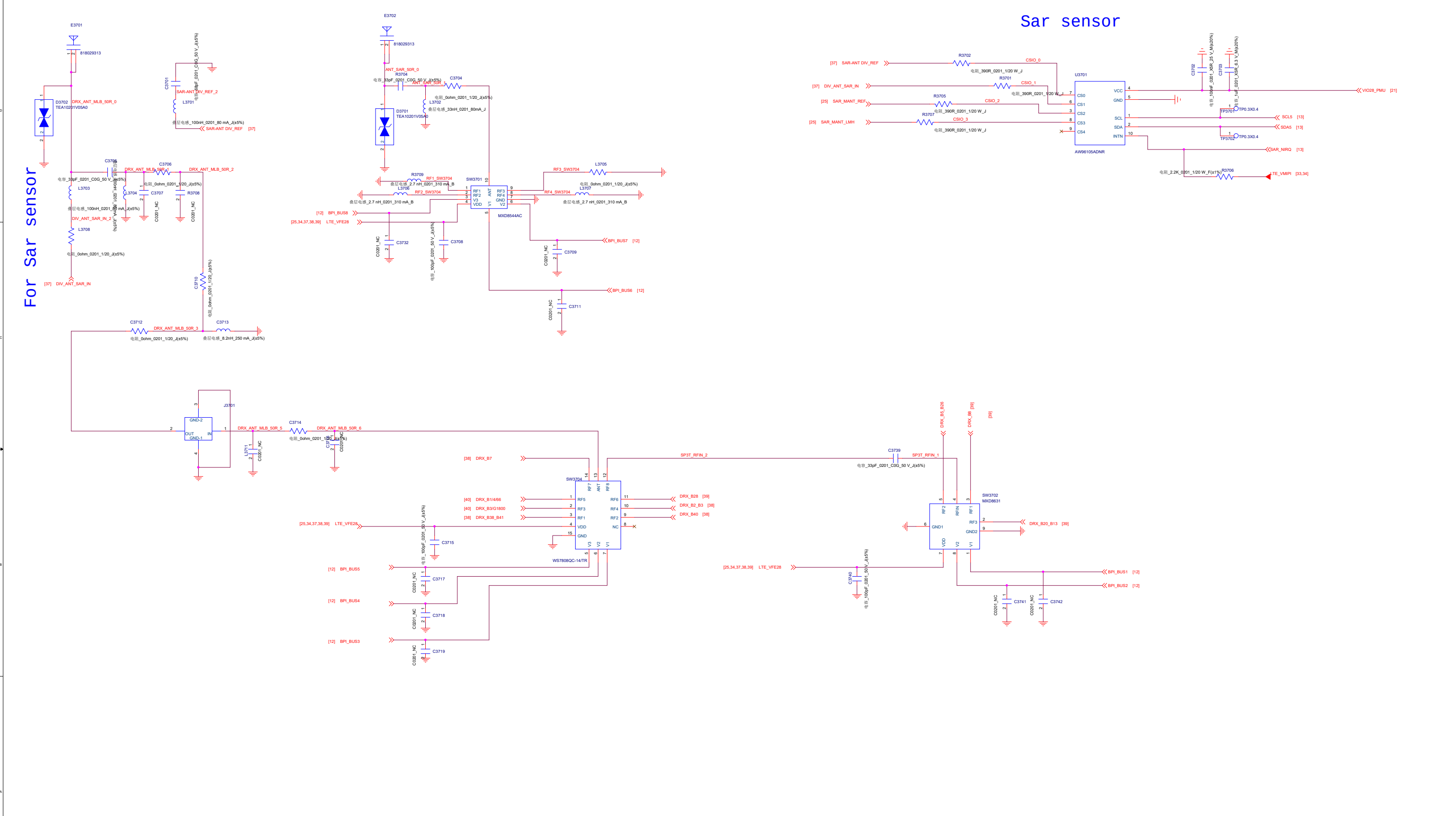


NOT TO BE USED, COPIED, REPRODUCED IN WHOLE OR IN PART, NOR ITS CONTENTS REVEALED IN ANY MANNER TO OTHERS WITHOUT THE EXPRESS WRITTEN PERMISSION OF QUALCOMM.

THIS TECHNICAL DATA MAY BE SUBJECT TO U.S. AND INTERNATIONAL EXPORT, RE-EXPORT OR TRANSFER ("EXPORT") LAWS. DIVERSION CONTRARY TO U.S. AND INTERNATIONAL LAW IS STRICTLY PROHIBITED.

Copyright (C) 2016 QUALCOMM Technologies,Inc.
All rights reserved

CONFIDENTIAL AND PROPRIETARY-QUALCOMM TECHNOLOGIES, INC.

QUALCOMM IS A REGISTERED TRADEMARK OF QUALCOMM INCORPORATED IN THE UNITED STATES AND MAY BE REGISTERED IN OTHER COUNTRIES. OTHER PRODUCT AND BRAND NAMES MAY BE TRADEMARKS OR REGISTERED TRADEMARKS OF THEIR RESPECTIVE OWNERS.

**QUALCOMM Technologies,Inc.**
5775 Morehouse Drive
San Diego, CA 92121-1714
U.S.A.

**Title** SCHEMATIC, CCA, MAIN, QRD8953_2-4-2, DVT1.1

Size D | Sheet Name Eplus | Rev V1
Date: Monday, August 29, 2022 | Sheet 37 of 99

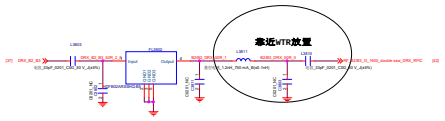


B38/41

| Description | Code | Vendor | SKU |
|---|---|---|---|
| B38 SAW | NDFH075-2605SA | 华变 | LATAM |
| B41 SAW | HDFB41KRSS-B5 | 好达 | Europe&APEM |

B38/41 DRx

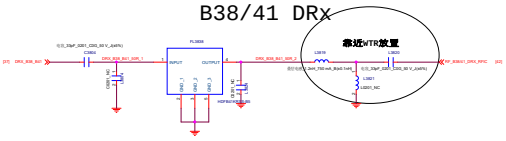


B7 DRx

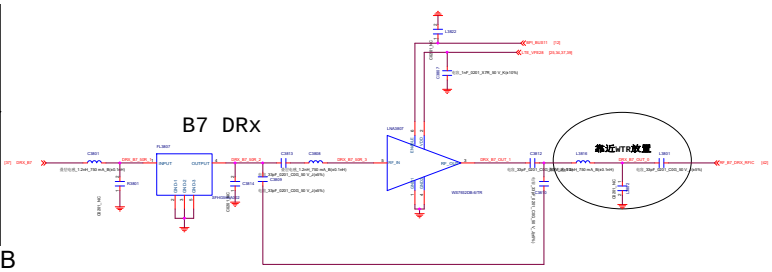


DRX_B40

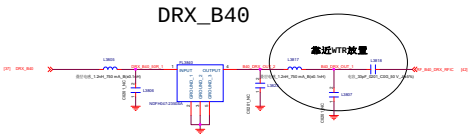


NOT TO BE USED, COPIED, REPRODUCED IN WHOLE OR IN PART, NOR DISCLOSED TO THIRD PARTIES IN ANY MANNER WITHOUT THE PRIOR WRITTEN CONSENT OF QUALCOMM.

THIS TECHNICAL DATA MAY BE SUBJECT TO U.S. AND INTERNATIONAL EXPORT, RE-EXPORT OR TRANSFER (TEXPORT) LAWS. DIVERSION CONTRARY TO U.S. AND INTERNATIONAL LAW IS STRICTLY PROHIBITED.

Copyright(C) 2009 QUALCOMM Technologies,Inc.
All rights reserved

CONFIDENTIAL AND PROPRIETARY QUALCOMM TECHNOLOGIES, INC.

QUALCOMM IS A REGISTERED TRADEMARK OF QUALCOMM INCORPORATED IN THE UNITED STATES AND MAY BE REGISTERED IN OTHER COUNTRIES. OTHER PRODUCT AND BRAND NAMES MAY BE TRADEMARKS OR REGISTERED TRADEMARKS OF THEIR RESPECTIVE OWNERS.

QUALCOMM Technologies,Inc.
5775 Morehouse Drive
San Diego, CA 92121-1714
U.S.A.

Title

SCHEMATIC, CCA, MAIN, GRENADA_2-0-0, DVT1.1

Size: Number: Rev: 1.0
File: Monday, August 24, 2009 Sheet 36 of 38

| Description | Code | Vendor | SKU |
|---|---|---|---|
| B26 DRX | NDFH052-0876SA | 华宴 | LATAM &APEM |
| B5 DRX | HDFB05ARSSHQ-B5 | 好达 | Europe |

| Description | Code | Vendor | SKU |
|---|---|---|---|
| B20 DRX | NDFH016-0806SA | 华宴 | Europe&APEM |
| B13 DRX | SAFFB742MAA0F0AR1X | 村田 | LATAM + CA |

## B5_B26 DRX

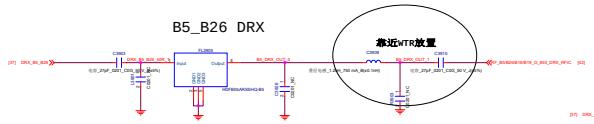


## B20_B13 DRX

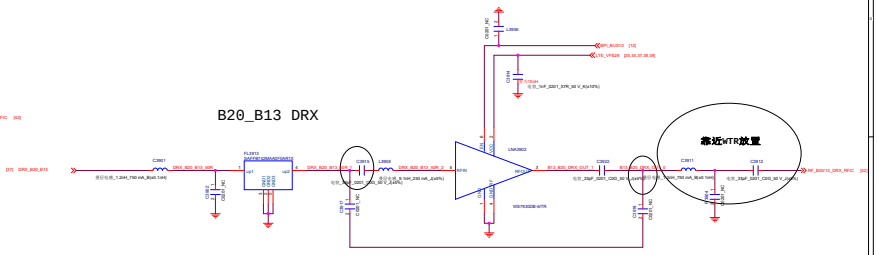


## B8 DRX

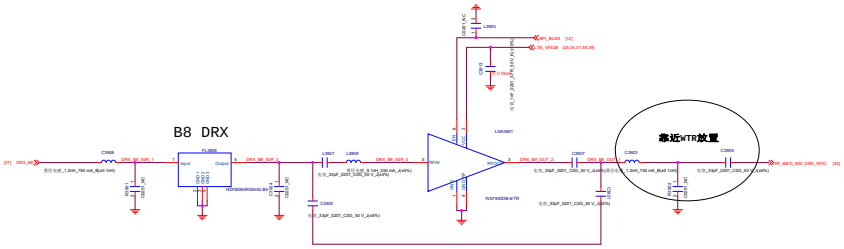


## B28_DRX

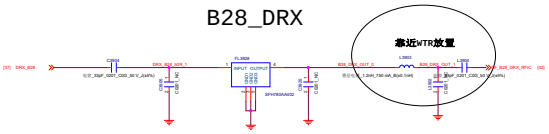


NOT TO BE USED, COPIED, REPRODUCED IN WHOLE OR IN PART, NOR TRANSMITTED IN ANY FORM OR BY ANY MEANS, ELECTRONIC OR OTHERWISE WITHOUT THE EXPRESS WRITTEN PERMISSION OF QUALCOMM.

THIS TECHNICAL DATA MAY BE SUBJECT TO U.S. AND INTERNATIONAL EXPORT, RE-EXPORT OR TRANSFER (“EXPORT”) LAWS. DIVERSION CONTRARY TO U.S. AND INTERNATIONAL LAW IS STRICTLY PROHIBITED.

Copyright (C) 2010 QUALCOMM Technologies,Inc.
All rights reserved

CONFIDENTIAL AND PROPRIETARY-QUALCOMM TECHNOLOGIES, INC.

QUALCOMM IS A REGISTERED TRADEMARK OF QUALCOMM INCORPORATED IN THE UNITED STATES AND MAY BE REGISTERED OR PENDING REGISTRATION IN OTHER COUNTRIES. QUALCOMM IS NOT AN TRADEMARK OR REGISTERED TRADEMARK OF THEIR RESPECTIVE OWNERS.

QUALCOMM

QUALCOMM Technologies,Inc.
5775 Morehouse Drive
San Diego, CA 92121-1714
U.S.A.

Title
SCHEMATIC, CCA, MAIN, QRD8955_2-0-5, DVT1.1

| Size | Document Number | Rev |
|---|---|---|
| D | 80-P8435-1 | V1 |

Date: Monday, August 30, 2010 Sheet 38 of 86

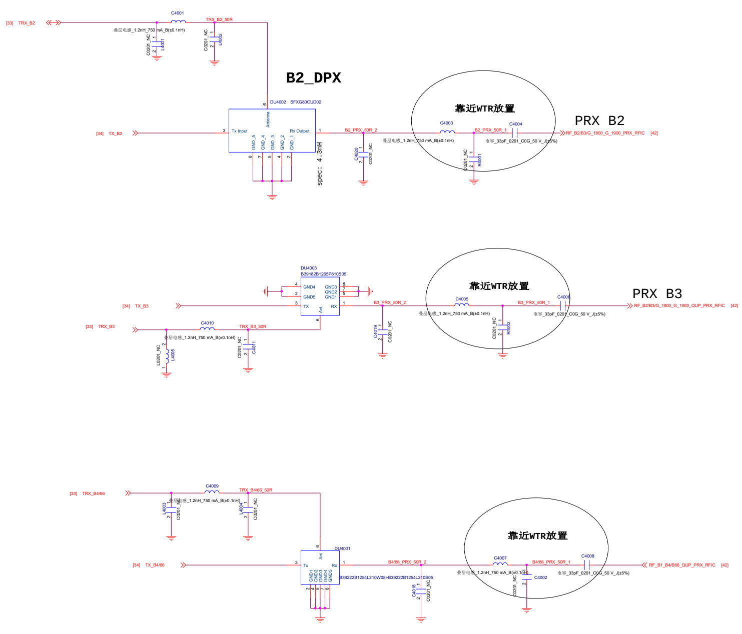


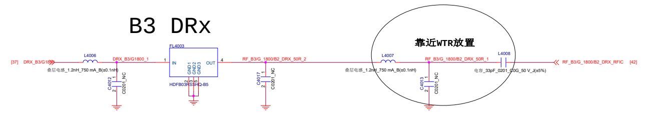


## B1/B4/B66

| Description | Code | Vendor | SKU |
|---|---|---|---|
| B66 SAW | MS11U2G15-RX66S | 麦捷 | LATAM |
| B1 SAW | HDFB01RSSHQ-B5 | 好达 | Europe&APEM |

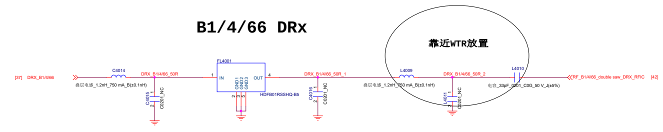



NOT TO BE USED, COPIED, REPRODUCED IN WHOLE OR IN PART, NOR ITS CONTENTS REVEALED IN ANY MANNER TO OTHERS WITHOUT THE EXPRESS WRITTEN PERMISSION OF QUALCOMM.

THIS TECHNICAL DATA MAY BE SUBJECT TO U.S. AND INTERNATIONAL EXPORT, RE-EXPORT OR TRANSFER ("EXPORT") LAWS. DIVERSION CONTRARY TO U.S. AND INTERNATIONAL LAW IS STRICTLY PROHIBITED.

Copyright (C) 2016 QUALCOMM Technologies,Inc.
All rights reserved

CONFIDENTIAL AND PROPRIETARY-QUALCOMM TECHNOLOGIES, INC.

QUALCOMM IS A REGISTERED TRADEMARK OF QUALCOMM INCORPORATED IN THE UNITED STATES AND MAY BE REGISTERED IN OTHER COUNTRIES. OTHER PRODUCT AND BRAND NAMES MAY BE TRADEMARKS OR REGISTERED TRADEMARKS OF THEIR RESPECTIVE OWNERS.



QUALCOMM Technologies,Inc.
5775 Morehouse Drive
San Diego, CA 92121-1714
U.S.A.


Title
SCHEMATIC, CCA, MAIN, QRD8953_2-4-2, DVT1.1

Size D | Sheet Name Eplus | Rev V1

Date: Monday, August 29, 2022 | Sheet 40 of 99

5 4 3 2 1

D D

C C

B B

A A

NOT TO BE USED, COPIED, REPRODUCED IN WHOLE OR IN PART, NOR ITS CONTENTS REVEALED IN ANY MANNER TO OTHERS WITHOUT THE EXPRESS WRITTEN PERMISSION OF QUALCOMM.

THIS TECHNICAL DATA MAY BE SUBJECT TO U.S. AND INTERNATIONAL EXPORT, RE-EXPORT OR TRANSFER ("EXPORT") LAWS. DIVERSION CONTRARY TO U.S. AND INTERNATIONAL LAW IS STRICTLY PROHIBITED.

Copyright (C) 2016 QUALCOMM Technologies,Inc.
All rights reserved

CONFIDENTIAL AND PROPRIETARY-QUALCOMM TECHNOLOGIES, INC.

QUALCOMM IS A REGISTERED TRADEMARK OF QUALCOMM INCORPORATED IN THE UNITED STATES AND MAY BE REGISTERED IN OTHER COUNTRIES. OTHER PRODUCT AND BRAND NAMES MAY BE TRADEMARKS OR REGISTERED TRADEMARKS OF THEIR RESPECTIVE OWNERS.

QUALCOMM Technologies,Inc.
5775 Morehouse Drive
San Diego, CA 92121-1714
U.S.A.

Title
SCHEMATIC, CCA, MAIN, QRD8953_2-4-2, DVT1.1

| Size | Sheet Name | Rev |
|---|---|---|
| A1 | Eplus | V1 |

Date: Monday, August 29, 2022 

5 4 3 2 1

PRX/DRX 1-8 For LB/MB:600M-2025M
PRX/DRX 9-12 For HB/MB:1805M-2690M

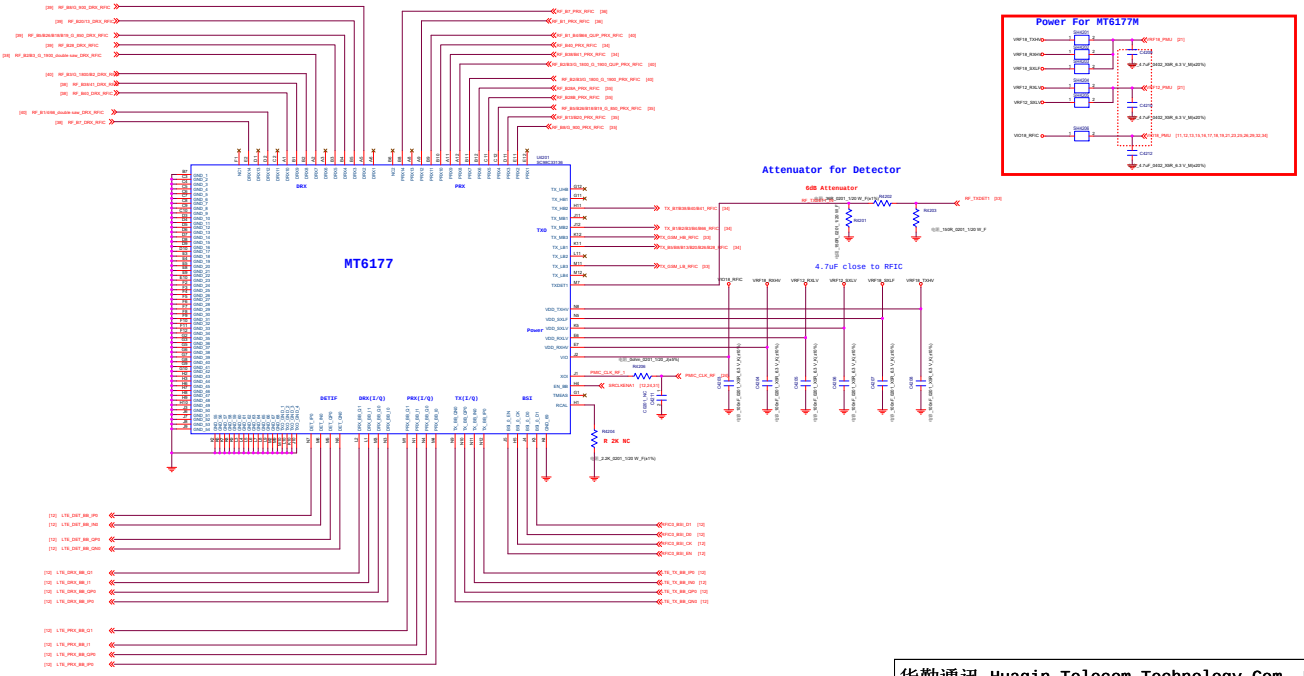


| | | |
|---|---|---|
| 华勤通讯 Huaqin Telecom Technology Com.,Ltd | | |
| Title | 31_RF_MT6177_Pin_Out | |
| Size D | Project AL1611_MB_V4 | Rev V4 |
| Date: Monday, August 29, 2022 | Sheet 42 of 99 | |

NOT TO BE USED, COPIED, REPRODUCED IN WHOLE OR IN PART, NOR ITS CONTENTS REVEALED IN ANY MANNER TO OTHERS WITHOUT THE EXPRESS WRITTEN PERMISSION OF QUALCOMM.

THIS TECHNICAL DATA MAY BE SUBJECT TO U.S. AND INTERNATIONAL EXPORT, RE-EXPORT OR TRANSFER ("EXPORT") LAWS. DIVERSION CONTRARY TO U.S. AND INTERNATIONAL LAW IS STRICTLY PROHIBITED.

Copyright (C) 2016 QUALCOMM Technologies,Inc.
All rights reserved

CONFIDENTIAL AND PROPRIETARY-QUALCOMM TECHNOLOGIES, INC.

QUALCOMM IS A REGISTERED TRADEMARK OF QUALCOMM INCORPORATED IN THE UNITED STATES AND MAY BE REGISTERED IN OTHER COUNTRIES. OTHER PRODUCT AND BRAND NAMES MAY BE TRADEMARKS OR REGISTERED TRADEMARKS OF THEIR RESPECTIVE OWNERS.

**QUALCOMM Technologies,Inc.**

5775 Morehouse Drive
San Diego, CA 92121-1714
U.S.A.

**Title**
SCHEMATIC, CCA, MAIN, QRD8953_2-4-2, DVT1.1

| Size | Sheet Name | Rev |
|---|---|---|
| D | Eplus | V1 |

Date: Monday, August 29, 2022 | Sheet 43 of 99

# WIFI 2.4G_BT_5G_GPS

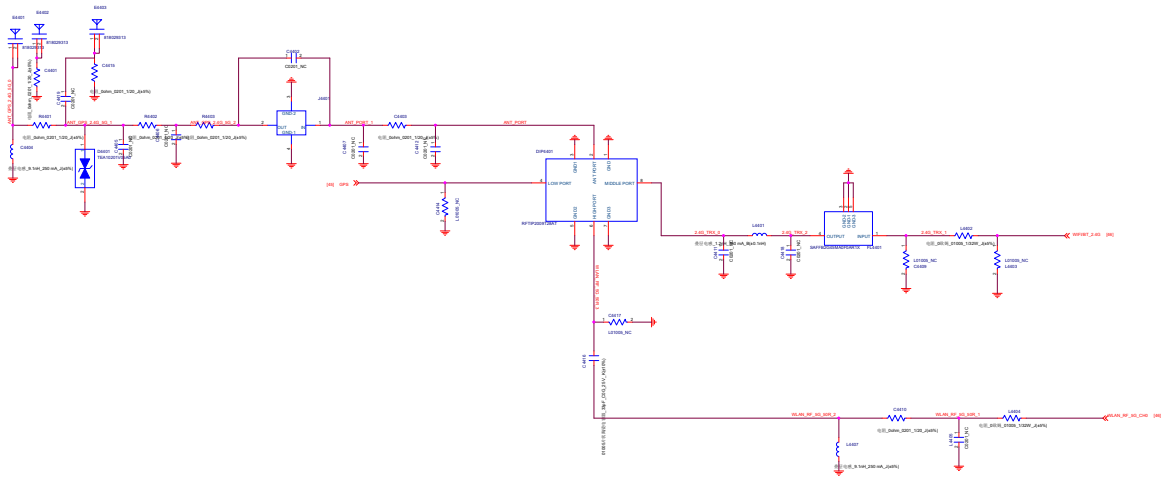



NOT TO BE USED, COPIED, REPRODUCED IN WHOLE OR IN PART, NOR ITS CONTENTS REVEALED IN ANY MANNER TO OTHERS WITHOUT THE EXPRESS WRITTEN PERMISSION OF QUALCOMM.

THIS TECHNICAL DATA MAY BE SUBJECT TO U.S. AND INTERNATIONAL EXPORT, RE-EXPORT, OR TRANSFER (“EXPORT”) LAWS. DIVERSION CONTRARY TO U.S. AND INTERNATIONAL LAW IS STRICTLY PROHIBITED.

Copyright (C) 2010 QUALCOMM Technologies,Inc.
All rights reserved.

CONFIDENTIAL AND PROPRIETARY-QUALCOMM TECHNOLOGIES, INC.

QUALCOMM IS A REGISTERED TRADEMARK OF QUALCOMM INCORPORATED. QUALCOMM IS A TRADEMARK OF QUALCOMM INCORPORATED IN OTHER COUNTRIES. OTHER PRODUCT AND BRAND NAMES MAY BE TRADEMARKS OR REGISTERED TRADEMARKS OF THEIR RESPECTIVE OWNERS.



QUALCOMM Technologies,Inc.
5775 Morehouse Drive
San Diego, CA 92121-1714
U.S.A.


Title
SCHEMATIC, CCA, WAN, QR30001_2.4-5_SVT1.1

| Size | Document Number | Rev |
|---|---|---|
| D | Xpan | V1 |

Date: Monday, August 30, 2010 Sheet 44 of 48

# GPS

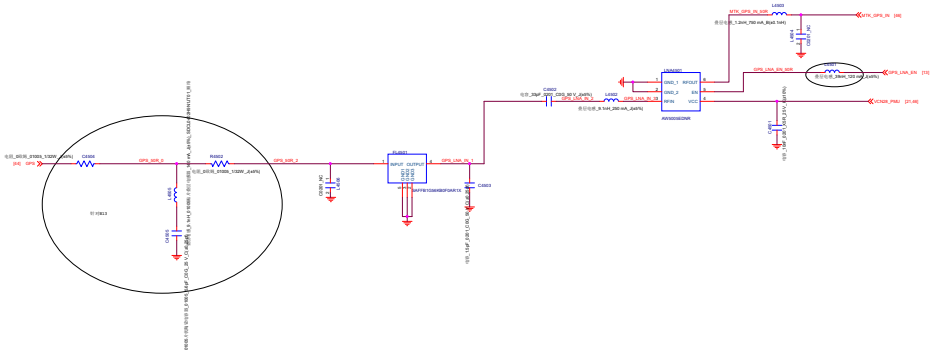



NOT TO BE USED, COPIED, REPRODUCED IN WHOLE OR IN PART, NOR TRANSMITTED IN ANY FORM BY ANY MEANS OR PURPOSE WITHOUT THE EXPRESS WRITTEN PERMISSION OF QUALCOMM.

THIS TECHNICAL DATA MAY BE SUBJECT TO U.S. AND INTERNATIONAL EXPORT, RE-EXPORT OR TRANSFER ("EXPORT") LAWS. EVEN/DOD CONTRARY TO U.S. AND INTERNATIONAL LAW IS STRICTLY PROHIBITED.

Copyright (C) 2010 QUALCOMM Technologies,Inc.
All rights reserved

CONFIDENTIAL AND PROPRIETARY-QUALCOMM TECHNOLOGIES, INC.

QUALCOMM IS A REGISTERED TRADEMARK OF QUALCOMM INCORPORATED IN THE UNITED STATES AND MAY BE REGISTERED OR PENDING IN OTHER COUNTRIES. OTHER PRODUCT NAMES MAY BE TRADEMARKS OR REGISTERED TRADEMARKS OF THEIR RESPECTIVE OWNERS.


QUALCOMM Technologies,Inc.
5775 Morehouse Drive
San Diego, CA 92121-1714
U.S.A

Title
SCHEMATIC, CCS, 8936, QRD8955_2-4-0, SVT1.1

Size: D | Number: | Rev: SV1
Date: Monday, August 16, 2010 | Sheet 25 of 28

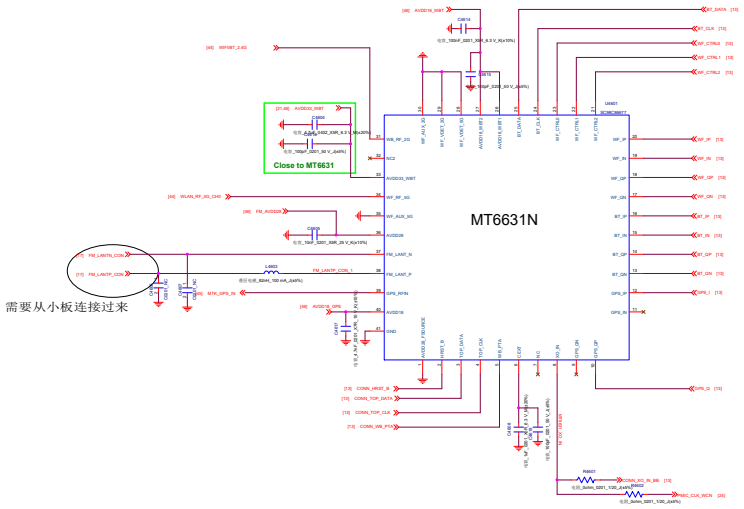


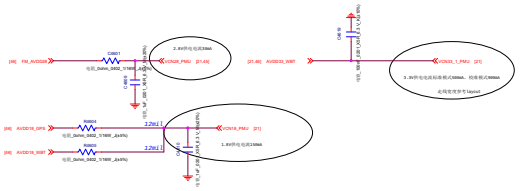

| Schematic design notice of "51_CONNECTIVITY_CONSYS_MT6631" | |
|---|---|
| Note 51-1: | For R5015 size, please select 0402 size or larger one |
| Note 51-2: | Please refer to MT6765 Baseband design notice for VCN33 LDO selection guide |
| Note 51-3: | If WiFi 5G not support, connect pin 34(WF_RF_5G) to GND |
| Note 51-4: | Pin 36 (AVDD28_FM) must be connected to VCN28 even if FM not support |

| | | |
|---|---|---|
| 华勤通讯 Huaqin Telecom Technology Com.,Ltd | | |
| Title | 36_RF_WCN_MT6631 | |
| Size D | Project AL1611_MB_V4 | Rev V4 |
| Date: Monday, August 29, 2022 | Sheet 46 of 99 | |