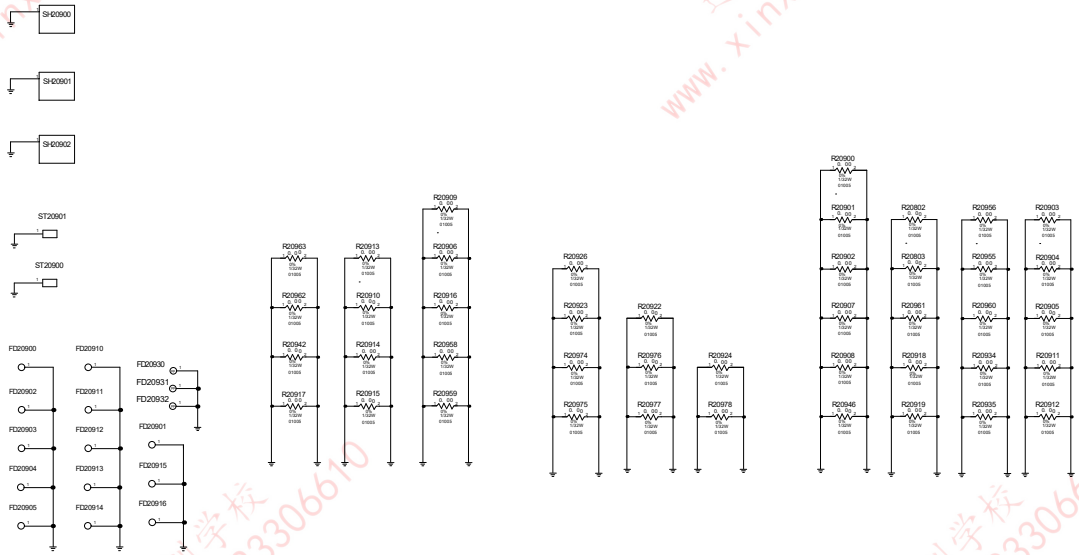

迅维职业技能培训学校
www.xinxunwei.com 18823306610

Number	1
鑫智造图纸 XZZ drawing	

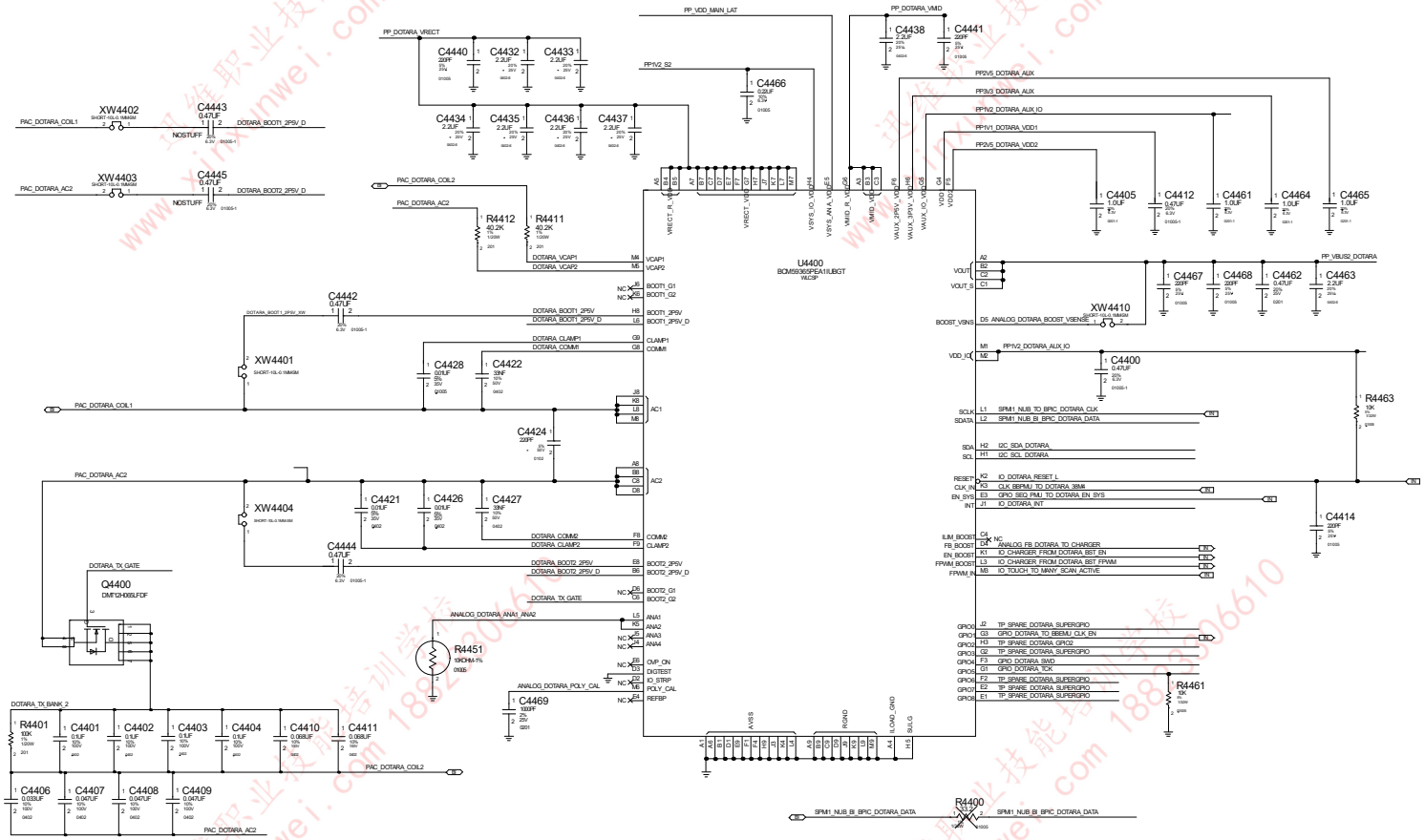

Number	2

鑫智造图纸
XZZ drawing

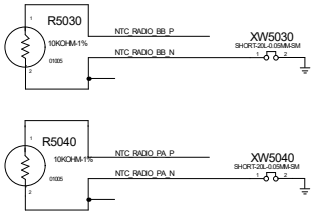

迅维职业技能培训学校
www.xinxunwei.com 18823306610

Number 3

鑫智造图纸
XZZ drawing

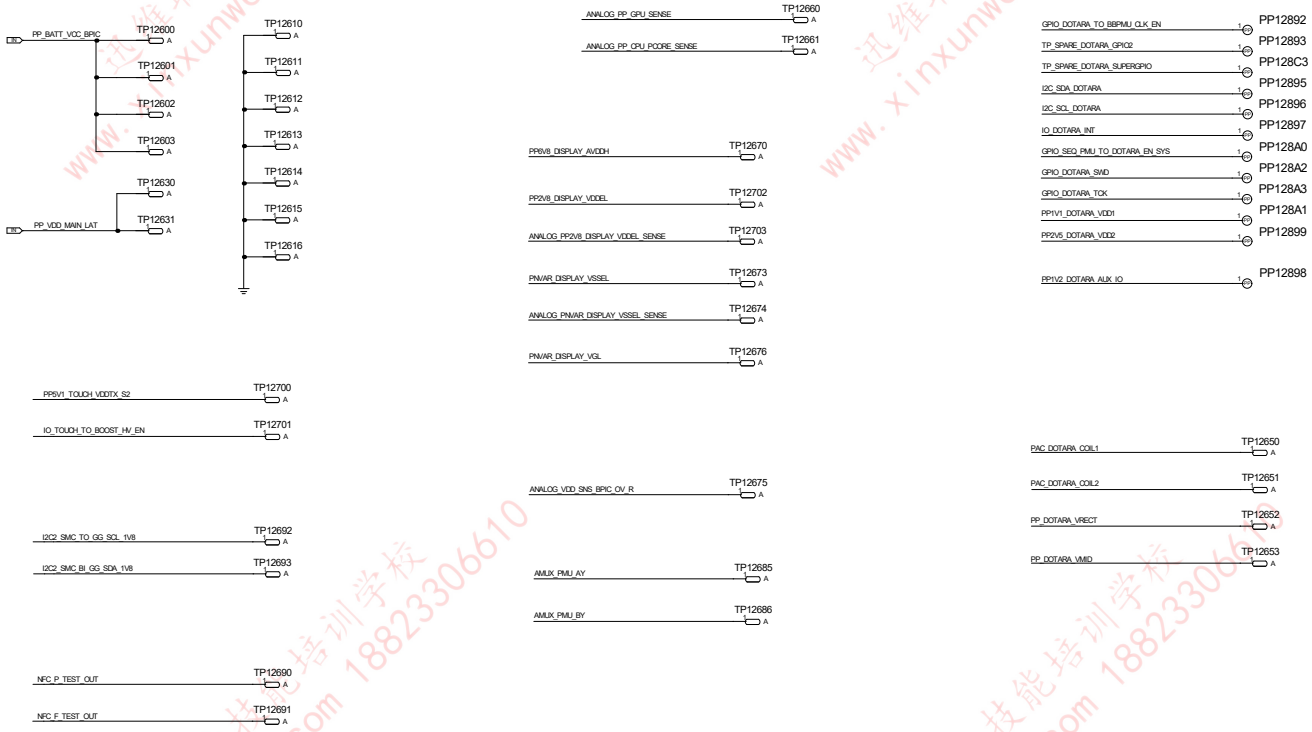

迅维职业技能培训学校
www.xinxunwei.com 18823306610

Number	4

鑫智造图纸
XZZ drawing

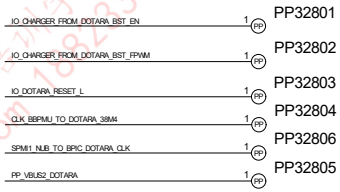

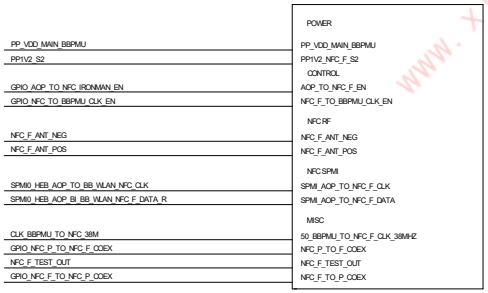

迅维职业技能培训学校 www.xinxunwei.com 18823306610

Number	5

鑫智造图纸
XZZ drawing

J_INT_TOP

998-25035
OMIT
SYM 1 OF 4

GND	1	I01	I068	68
GND	2	I02	I069	69
GND	3	I03	I070	70
GND	4	I04	I071	71
GND	5	I05	I072	72
GND	6	I06	I073	73
GND	7	I07	I074	74
GND	8	I08	I075	75
NFC_F_ANT_NEG	9	I09	I076	76
NFC_F_ANT_NEG	10	I010	I077	77
NFC_F_ANT_POS	11	I011	I078	78
NFC_F_ANT_POS	12	I012	I079	79
GND	13	I013	I080	80
GND	14	I014	I081	81
PP1V2_S4	15	I015	I082	82
GND	16	I016	I083	83
GND	17	I017	I084	84
GND	18	I018	I085	85
GPIO_SEQ_PMU_TO_BBPMU_RESET_L	19	I019	I086	86
GND	20	I020	I087	87
GPIO_S4_PMU_TO_WLAN_REG_ON	21	I021	I088	88
GPIO_PMU_FROM_WLAN_HOST_WAKE	22	I022	I089	89
GND	23	I023	I090	90
GND	24	I024	I091	91
90_PCIE_GP2_AP_TO_WLAN_TX_N	25	I025	I092	92
GND	26	I026	I093	93
90_PCIE_GP2_AP_TO_WLAN_TX_P	27	I027	I094	94
GND	28	I028	I095	95
GND	29	I029	I096	96
GND	30	I030	I097	97
90_PCIE_GP2_AP_TO_WLAN_REFCLK_N	31	I031	I098	98
GND	32	I032	I099	99
90_PCIE_GP2_AP_TO_WLAN_REFCLK_P	33	I033	I100	100
GND	34	I034	I101	101
GND	35	I035	I102	102
GND	36	I036	I103	103
90_PCIE_GP2_AP_FROM_WLAN_RX_P	37	I037	I104	104
GND	38	I038	I105	105
90_PCIE_GP2_AP_FROM_WLAN_RX_N	39	I039	I106	106
GND	40	I040	I107	107
GND	41	I041	I108	108
PCIE_GP2_AP_TO_WLAN_PERST_L	42	I042	I109	109
PP3V0_S2	43	I043	I110	110
GPIO_BT_TO_BOT_SPKR_TRIG	44	I044	I111	111
GPIO_AP_FROM_WLAN_TIME_SYNC	45	I045	I112	112
GPIO_AP_FROM_BB_RESET_DETECT_L	46	I046	I113	113
PCIE_GP2_AP_BI_WLAN_CLKREQ_L	47	I047	I114	114
SWD_AP_TO_MANY_SWCLK	48	I048	I115	115
ANALOG_PP_GPU_SENSE	49	I049	I116	116
PCIE_GP0_AP_BI_BB_CLKREQ_L	50	I050	I117	117
GND	51	I051	I118	118
GPIO_AP_TO_BB_COREDUMP	52	I052	I119	119
PCIE_GP0_AP_TO_BB_PERST_L	53	I053	I120	120
GND	54	I054	I121	121
GND	55	I055	I122	122
PP_VDD_MAIN_BBPMU	56	I056	I123	123
GPIO_AP_TO_BBPMU_DEBUG_EN	57	I057	I124	124
PP_VDD_MAIN_BBPMU	58	I058	I125	125
GND	59	I059	I126	126
PP_VDD_MAIN_BBPMU	60	I060	I127	127
GND	61	I061	I128	128
PP_VDD_MAIN_BBPMU	62	I062	I129	129
GND	63	I063	I130	130
PP_VDD_MAIN_BBPMU	64	I064	I131	131
GND	65	I065	I132	132
PP_VDD_MAIN_BBPMU	66	I066	I133	133
PP_VDD_MAIN_BBPMU	67	I067	I134	134
GND	68	I068	I135	135
GND	69	I069	I136	136
GND	70	I070	I137	137
PP_VDD_MAIN_BBPMU	71	I071	I138	138
GND	72	I072	I139	139
PP_VDD_MAIN_BBPMU	73	I073	I140	140
GND	74	I074	I141	141
GND	75	I075	I142	142
GND	76	I076	I143	143
ANALOG_UAT_5G_FEM_TO_WLAN_PDTS	77	I077	I144	144
GND	78	I078	I145	145
GND	79	I079	I146	146
GND	80	I080	I147	147
CLK_GPIO_S4_PMU_TO_WLAN_R1_32K	81	I081	I148	148
GND	82	I082	I149	149
GND	83	I083	I150	150
GND	84	I084	I151	151
SPMI0_HEB_AOP_BI_BB_WLAN_NFC_DATA	85	I085	I152	152
GND	86	I086	I153	153
SPMI0_HEB_AOP_TO_BB_WLAN_NFC_CLK	87	I087	I154	154
			I155	155
			I156	156
			I157	157
			I158	158
			I159	159
			I160	160
			I161	161
			I162	162
			I163	163
			I164	164
			I165	165
			I166	166
			I167	167
			I168	168
			I169	169
			I170	170
			I171	171
			I172	172
			I173	173
			I174	174

UART2_AOP_TO_BB_TXD	88	I088		
SPMI1_COEX_AOP_BI_BB_WLAN_R1_DATA	89	I089		
GND	90	I090		
SPMI1_COEX_AOP_TO_BB_WLAN_R1_CLK	91	I091		
GPIO_AOP_TO_BB_FORCE_PWM	92	I092		
GND	93	I093		
GND	94	I094		
50_RX_XCVR_DRX15_UHB_DSM_UHB_RX_OUT2	95	I095		
GND	96	I096		
50_RX_XCVR_DRX14_UHB_DSM_UHB_RX_OUT1	97	I097		
GND	98	I098		
50_RX_XCVR_DRX12_UHB_DSM_N79_RX_OUT1	99	I099		
GND	100	I100		
50_RX_XCVR_DRX13_UHB_DSM_N79_RX_OUT2	101	I101		
GND	102	I102		
GND	103	I103		
GND	104	I104		
50_TRX_UHB_PORTB	105	I105		
GND	106	I106		
GND	107	I107		
50_LAA_RX_XCVR_DRX10	108	I108		
GND	109	I109		
GND	110	I110		
50_WLAN_A_CD_TXRX_FEM_M	111	I111		
GND	112	I112		
GND	113	I113		
GND	114	I114		
SHIELD_RFFE5_SCLK_SDR	115	I115		
GND	116	I116		
SHIELD_RFFE5_SDATA_SDR	117	I117		
GND	118	I118		
GND	119	I119		
GND	120	I120		
GND	121	I121		
GND	122	I122		
GND	123	I123		
PP_VIO_RFFE_UAT_1V8	124	I124		
GPIO_R1_TO_BB_LAA_SW_CTRL	125	I125		
PP1V8_S4_UAT	126	I126		
GND	127	I127		
GND	128	I128		
RFFE_WLAN_TO_UAT_5G_FEM_RST_L	129	I129		
SHIELD_RFFE_WLAN_TO_UAT_FEM5_DATA	130	I130		
GPIO_WLAN_TO_UAT_5G_FEM_LNA_BYP_EN	131	I131		
SHIELD_RFFE_WLAN_TO_UAT_FEM5_CLK	132	I132		
GND	133	I133		
GND	134	I134		
GND	135	I135		
PP_VDD_RF_1V2	136	I136		
GND	137	I137		
SAWTOOTH_UAT_A	138	I138		
GND	139	I139		
GND	140	I140		
GPIO_BB_TO_R1_LAA_REQ	141	I141		
GPIO_WLAN_TO_R1_CDEX	142	I142		
GND	143	I143		
IO_BT_TO_R1_TIME_SYNC	144	I144		
GND	145	I145		
GPIO_R1_TO_WLAN_CDEX	146	I146		
GND	147	I147		
GND	148	I148		
GND	149	I149		
50_RX_GNSS_L5_XCVR	150	I150		
GND	151	I151		
GND	152	I152		
SDR_GNSS_LNA_L5_EN	153	I153		
IO_BT_TO_R1_WAKE	154	I154		
GND	155	I155		
GND	156	I156		
GND	157	I157		
GND	158	I158		
GND	159	I159		
50_TRX_ANT2_LB_LMB_MB_HB_L1	160	I160		
GND	161	I161		
GND	162	I162		
GND	163	I163		
GND	164	I164		
GND	165	I165		
GND	166	I166		
GND	167	I167		
GND	168	I168		
GND	169	I169		
GND	170	I170		
GND	171	I171		
GND	172	I172		
GND	173	I173		
GND	174	I174		

J_INT_TOP

998-25035
OMIT
SYM 2 OF 4

GND	175	I175	I262	262
GND	176	I176	I263	263
GND	177	I177	I264	264
GND	178	I178	I265	265
GND	179	I179	I266	266
GND	180	I180	I267	267
GND	181	I181	I268	268
GND	182	I182	I269	269
GND	183	I183	I270	270
GND	184	I184	I271	271
GND	185	I185	I272	272
GND	186	I186	I273	273
GND	187	I187	I274	274
GND	188	I188	I275	275
GND	189	I189	I276	276
GND	190	I190	I277	277
GND	191	I191	I278	278
GND	192	I192	I279	279
GND	193	I193	I280	280
50_TRX_CPLR_U_CPL2_ANT_LMB_MB_HB	194	I194	I281	281
GND	195	I195	I282	282
GND	196	I196	I283	283
GND	197	I197	I284	284
GND	198	I198	I285	285
GND	199	I199	I286	286
GND	200	I200	I287	287
GND	201	I201	I288	288
GND	202	I202	I289	289
GND	203	I203	I290	290
GND	204	I204	I291	291
GND	205	I205	I292	292
GND	206	I206	I293	293
GND	207	I207	I294	294
GND	208	I208	I295	295
GND	209	I209	I296	296
GND	210	I210	I297	297
GND	211	I211	I298	298
GND	212	I212	I299	299
GND	213	I213	I300	300
GND	214	I214	I301	301
GND	215	I215	I302	302
GND	216	I216	I303	303
GND	217	I217	I304	304
GND	218	I218	I305	305
GND	219	I219	I306	306
GND	220	I220	I307	307
GND	221	I221	I308	308
GND	222	I222	I309	309
GND	223	I223	I310	310
GND	224	I224	I311	311
GND	225	I225	I312	312
GND	226	I226	I313	313
GND	227	I227	I314	314
GND	228	I228	I315	315
GND	229	I229	I316	316
GND	230	I230	I317	317
GND	231	I231	I318	318
GND	232	I232	I319	319
GND	233	I233	I320	320
GND	234	I234	I321	321
GND	235	I235	I322	322
GND	236	I236	I323	323
GND	237	I237	I324	324
GND	238	I238	I325	325
GND	239	I239	I326	326
GND	240	I240	I327	327
GND	241	I241	I328	328
GND	242	I242	I329	329
PP1V2_S2_UAT	243	I243	I330	330
GND	244	I244	I331	331
NFC_P_TEST_OUT	245	I245	I332	332
GND	246	I246	I333	333
GND	247	I247	I334	334
GND	248	I248	I335	335
GND	249	I249	I336	336
GND	250	I250	I337	337
GND	251	I251	I338	338
GND	252	I252	I339	339
GND	253	I253	I340	340
GND	254	I254	I341	341
GND	255	I255	I342	342
GND	256	I256	I343	343
GND	257	I257	I344	344
GND	258	I258	I345	345
GND	259	I259	I346	346
GND	260	I260	I347	347
SAWTOOTH_UAT_B	261	I261	I348	348

GND	262	I262		
GND	263	I263		
50_TRX_WLAN_G_BT_ANT4_NPLXR	264	I264		
GND	265	I265		
GND	266	I266		
GND	267	I267		
GPIO_NFC_F_TO_NFC_P_CDEX	268	I268		
GPIO_NFC_P_TO_NFC_F_CDEX	269	I269		
PP_VDD_BOOST	270	I270		
GND	271	I271		
GND	272	I272		
GND	273	I273		
GND	274	I274		
GND	275	I275		
GND	276	I276		
UART2_AOP_FROM_BB_RXD	277	I277		
GPIO_BB_TO_AP_GSM_TXBURST_IND_1V8	278	I278		
I2C_BT_TO_NFC_SDA	279	I279		
GND	280	I280		
I2C_BT_TO_NFC_SCL	281	I281		
GND	282	I282		
GND	283	I283		
GND	284	I284		
SWD_AP_BI_BB_SWDIO	285	I285		
GND	286	I286		
GND	287	I287		
GND	288	I288		
GND	289	I289		
GND	290	I290		
PP_VDD_MAIN_UAT	291	I291		
GND	292	I292		
PP_VDD_MAIN_UAT	293	I293		
GND	294	I294		
PP_VDD_MAIN_UAT	295	I295		
GND	296	I296		
PP_VDD_MAIN_UAT	297	I297		
GND	298	I298		
GND	299	I299		
GND	300	I300		
I2S2_AP_FROM_BB_BCLK	301	I301		
GND	302	I302		
I2S2_AP_FROM_BB_LRCLK	303	I303		
GND	304	I304		
I2S2_AP_TO_BB_DOUT	305	I305		
GND	306	I306		
GPIO_AP_TO_BB_TIME_MARK	307	I307		
GPIO_AP_TO_NFC_IRONMAN_EN	308	I308		
I2S2_AP_FROM_BB_DIN	309	I309		
GND	310	I310		
90_PCIE_GP0_AP_TO_BB_TX_P	311	I311		
GND	312	I312		
90_PCIE_GP0_AP_TO_BB_TX_N	313	I313		
GND	314	I314		
GND	315	I315		
GND	316	I316		
90_PCIE_GP0_AP_TO_BB_REFCLK_P	317	I317		
GND	318	I318		
90_PCIE_GP0_AP_TO_BB_REFCLK_N	319	I319		
GND	320	I320		
GND	321	I321		
GND	322	I322		
90_PCIE_GP0_AP_FROM_BB_RX_P	323	I323		
GND	324	I324		
90_PCIE_GP0_AP_FROM_BB_RX_N	325	I325		
GND	326	I326		
GND	327	I327		
GPIO_ISP_ROAM_TO_STROBE_E75_WLAN_FLASH_TRIG	328	I328		
PP1V8_S2_UAT	329	I329		
GND	330	I330		
ANALOG_PP_CPU_PCORE_SENSE	331	I331		
GND	332	I332		
GPIO_SE_TO_BT_PKT_RDY	333	I333		
GND	334	I334		
GPIO_AP_FROM_BT_AUDIO_SYNC	335	I335		
ANALOG_VDD_SNS_BPIC_OV_R	336	I336		
GND	337	I337		
GND	338	I338		
GND	339	I339		
GND	340	I340		
NTC_RADIO_PA_P	341	I341		
GND	342	I342		
GND	343	I343		
NTC_RADIO_BB_P	344	I344		
IO_DOTARA_RESET_L	345	I345		
GND	346	I346		
GPIO_AOP_TO_WLAN_CONTEXT_B	347	I347		
GPIO_AOP_TO_WLAN_CONTEXT_A	348	I348		

Number 6

鑫智造图纸
XZZ drawing

迅维 www.xinxunwei.com 18823306610 学校

J_INT_TOP

SM

SYM 3 OF 4

GND	349	IO349	IO436	436	GND
AMUX_PMU_BY	350	IO350	IO437	437	IO_CHARGER_FROM_DOTARA_BST_EN
AMUX_PMU_AY	351	IO351	IO438	438	GND
GND	352	IO352	IO439	439	IO_CHARGER_FROM_DOTARA_BST_FPWM
PP1V8_S4	353	IO353	IO440	440	GND
GND	354	IO354	IO441	441	GND
GND	355	IO355	IO442	442	GND
GND	356	IO356	IO443	443	I2C2_SMC_BI_GG_SDA_1V8
PP_VDD_MAIN_LAT	357	IO357	IO444	444	GND
GND	358	IO358	IO445	445	I2C2_SMC_TO_GG_SCL_1V8
PP_VDD_MAIN_LAT	359	IO359	IO446	446	GND
GND	360	IO360	IO447	447	GND
PP_VDD_MAIN_LAT	361	IO361	IO448	448	GND
GND	362	IO362	IO449	449	GND
GND	363	IO363	IO450	450	GND
PP_VDD_MAIN_LAT	364	IO364	IO451	451	GND
GND	365	IO365	IO452	452	GND
GND	366	IO366	IO453	453	GND
GND	367	IO367	IO454	454	GND
90_USB_BB_R_P	368	IO368	IO455	455	GND
GND	369	IO369	IO456	456	GND
90_USB_BB_R_N	370	IO370	IO457	457	GND
GND	371	IO371	IO458	458	GND
GND	372	IO372	IO459	459	GND
GND	373	IO373	IO460	460	GND
IO_TOUCH_TO_MANY_SCAN_ACTIVE	374	IO374	IO461	461	GND
GND	375	IO375	IO462	462	GND
GPIO_PMU_FROM_BB_PCIE_HOST_WAKE_L	376	IO376	IO463	463	GND
GND	377	IO377	IO464	464	GND
GPIO_SEQ_PMU_TO_DOTARA_EN_SYS	378	IO378	IO465	465	PP_BATT_VCC_BPIC
GND	379	IO379	IO466	466	GND
GND	380	IO380	IO467	467	PP_BATT_VCC_BPIC
GND	381	IO381	IO468	468	GND
GND	382	IO382	IO469	469	PP_BATT_VCC_BPIC
GND	383	IO383	IO470	470	GND
IO_TOUCH_TO_BOOST_HV_EN	384	IO384	IO471	471	GND
GND	385	IO385	IO472	472	PP_BATT_VCC_BPIC
PP5V1_TOUCH_VDDTX_S2	386	IO386	IO473	473	GND
GND	387	IO387	IO474	474	PP_BATT_VCC_BPIC
GND	388	IO388	IO475	475	GND
GND	389	IO389	IO476	476	PP_BATT_VCC_BPIC
SAWTOOTH_LAT_A	390	IO390	IO477	477	GND
GND	391	IO391	IO478	478	GND
SAWTOOTH_LAT_B	392	IO392	IO479	479	GND
GND	393	IO393	IO480	480	GND
SAWTOOTH_LAT_C	394	IO394	IO481	481	GND
GND	395	IO395	IO482	482	GND
GND	396	IO396	IO483	483	GND
GND	397	IO397	IO484	484	GND
GND	398	IO398	IO485	485	GND
GND	399	IO399	IO486	486	GND
GND	400	IO400	IO487	487	GND
GND	401	IO401	IO488	488	GND
GND	402	IO402	IO489	489	GND
PP1V2_S2	403	IO403	IO490	490	GND
GND	404	IO404	IO491	491	GND
GND	405	IO405	IO492	492	GND
GND	406	IO406	IO493	493	GND
GND	407	IO407	IO494	494	GND
GND	408	IO408	IO495	495	GND
PP_VBUS2_DOTARA	409	IO409	IO496	496	GND
GND	410	IO410	IO497	497	GND
PP_VBUS2_DOTARA	411	IO411	IO498	498	SPIM1_NUB_TO_BPIC_DOTARA_CLK
GND	412	IO412	IO499	499	GND
PP_VBUS2_DOTARA	413	IO413	IO500	500	SPIM1_NUB_BI_BPIC_DOTARA_DATA
GND	414	IO414	IO501	501	GND
PP_VBUS2_DOTARA	415	IO415	IO502	502	GND
GND	416	IO416	IO503	503	GND
GND	417	IO417	IO504	504	GND
GND	418	IO418	IO505	505	GND
GND	419	IO419	IO506	506	GND
GND	420	IO420	IO507	507	GND
GND	421	IO421	IO508	508	GND
GND	422	IO422	IO509	509	GND
GND	423	IO423	IO510	510	GND
GND	424	IO424	IO511	511	GND
GND	425	IO425	IO512	512	GND
GND	426	IO426	IO513	513	PNVAR_DISPLAY_VGL
GND	427	IO427	IO514	514	GND
GND	428	IO428	IO515	515	PP6V8_DISPLAY_AVDDH
GND	429	IO429	IO516	516	GND
GND	430	IO430	IO517	517	ANALOG_PNVAR_DISPLAY_VSSEL_SENSE
GND	431	IO431	IO518	518	GND
GND	432	IO432	IO519	519	PNVAR_DISPLAY_VSSEL
ANALOG_FB_DOMBRA_TO_CHARGER	433	IO433	IO520	520	GND
GND	434	IO434	IO521	521	ANALOG_PP2V8_DISPLAY_VDDEL_SENSE
GND	435	IO435	IO522	522	GND

J_INT_TOP

SM

998-25028

OMIT

SYM4 OF 4

PP2V8_DISPLAY_VDDEL	523	IO523	IO609	609	GND
GND	524	IO524	IO610	610	GND
GND	525	IO525	IO611	611	GND
GND	526	IO526	IO612	612	GND
GND	527	IO527	IO613	613	RFFE_WLAN_TO_LAT_2G_FEM_RST_L
PP_VDD_RF_1V2	528	IO528	IO614	614	GPIO_WLAN_TO_LAT_2G_FEM_LNA_BYP_EN
GND	529	IO529	IO615	615	GND
SHIELD_RFFE_WLAN_TO_LAT_FEMS_DATA	530	IO530	IO616	616	GND
GND	531	IO531	IO617	617	ANALOG_LAT_2G_FEM_TO_WLAN_PDTS
GND	532	IO532	IO618	618	GND
50_WLAN_G_C1_TXRX_FEM_M	533	IO533	IO619	619	GND
GND	534	IO534	IO620	620	SHIELD_RFFE1_SCLK_SDR
GND	535	IO535	IO621	621	SHIELD_RFFE1_SDATA_SDR
50_RX_XCVR_PRX14_N79_RX_OUT1	536	IO536	IO622	622	GND
GND	537	IO537	IO623	623	GND
GND	538	IO538	IO624	624	GND
50_RX_XCVR_PRX16_UHB_RX_OUT1	539	IO539	IO625	625	50_CPLR_L_CPL1_LAT_OUT
50_RX_XCVR_PRX15_N79_RX_OUT2	540	IO540	IO626	626	GND
50_RX_XCVR_PRX17_UHB_RX_OUT2	541	IO541	IO627	627	GND
GND	542	IO542	IO628	628	GND
GND	543	IO543	IO629	629	GND
GPIO_WLAN_TO_LAT_5G_FEM_LNA_BYP_EN	544	IO544	IO630	630	50_TRX_HB_PAD_ANT2_M
RFFE_WLAN_TO_LAT_5G_FEM_RST_L	545	IO545	IO631	631	GND
GND	546	IO546	IO632	632	GND
GND	547	IO547	IO633	633	50_TRX_HB_PAD_ANT1
ANALOG_LAT_5G_FEM_TO_WLAN_PDTS	548	IO548	IO634	634	GND
GND	549	IO549	IO635	635	GND
GND	550	IO550	IO636	636	GND
50_TX_IN_TX2_UHB_PAD_TX_N79_IN	551	IO551	IO637	637	GND
GND	552	IO552	IO638	638	50_TRX_IN_LMB_PAD_2G_LB_OUT_M
GND	553	IO553	IO639	639	GND
PP_APT_PA_LOWER	554	IO554	IO640	640	GND
PP_APT_PA_LOWER	555	IO555	IO641	641	GND
PP_APT_PA_LOWER	556	IO556	IO642	642	GND
GND	557	IO557	IO643	643	GND
GND	558	IO558	IO644	644	GND
SHIELD_RFFE3_SCLK_SDR	559	IO559	IO645	645	GND
SHIELD_RFFE3_SDATA_SDR	560	IO560	IO646	646	PAC_DOTARA_COIL2
GND	561	IO561	IO647	647	GND
GND	562	IO562	IO648	648	PAC_DOTARA_COIL2
50_WLAN_A_C1_TXRX_FEM_M	563	IO563	IO649	649	GND
GND	564	IO564	IO650	650	PAC_DOTARA_COIL2
GND	565	IO565	IO651	651	GND
50_LAA_RX_XCVR_PRX12	566	IO566	IO652	652	PAC_DOTARA_COIL1
GND	567	IO567	IO653	653	GND
GND	568	IO568	IO654	654	PAC_DOTARA_COIL1
50_UHB_L_CPLR_OUT	569	IO569	IO655	655	GND
GND	570	IO570	IO656	656	PAC_DOTARA_COIL1
GND	571	IO571	IO657	657	GND
50_TRX_UHB_PORTB_TX_PA	572	IO572	IO658	658	GND
GND	573	IO573	IO659	659	50_TRX_LB_PORTB_TX_M
GND	574	IO574	IO660	660	GND
50_TX_IN_XCVR_TX0_LB	575	IO575	IO661	661	GND
50_TX_IN_XCVR_TX1_LB_JB	576	IO576	IO662	662	GND
GND	577	IO577	IO663	663	50_TRX_LB_PORTB_RX1_M
GND	578	IO578	IO664	664	GND
SHIELD_RFFE3_SDATA_SDR	579	IO579	IO665	665	GND
SHIELD_RFFE3_SCLK_SDR	580	IO580	IO666	666	GND
GND	581	IO681	IO667	667	GND
GND	582	IO682	IO668	668	GND
PP_QET1_PA	583	IO683	IO669	669	GND
PP_QET1_PA	584	IO684	IO670	670	GND
GND	585	IO685			
GND	586	IO686			
SHIELD_RFFE2_SCLK_SDR	587	IO687			
SHIELD_RFFE2_SDATA_SDR	588	IO688			
GND	589	IO689			
GND	590	IO690			
50_RX_XCVR_PRX10_LB_PRX_OUT2	591	IO691			
50_RX_XCVR_PRX6_LB_A_RX0	592	IO692			
GND	593	IO693			
PP_VIO_RFFE_LAT_1V8	594	IO694			
GND	595	IO695			
GND	596	IO696			
GND	597	IO697			
GND	598	IO698			
GND	599	IO699			
GND	600	IO600			
GND	601	IO601			
SHIELD_RFFE_WLAN_TO_LAT_FEMS_CLK	602	IO602			
GND	603	IO603			
GND	604	IO604			
50_TX_IN_TX2_UHB_PAD_TX_UHB_IN_1	605	IO605			
GND	606	IO606			
GND	607	IO607			
GND	608	IO608			

Number 7

鑫智造图纸
XZZ drawing

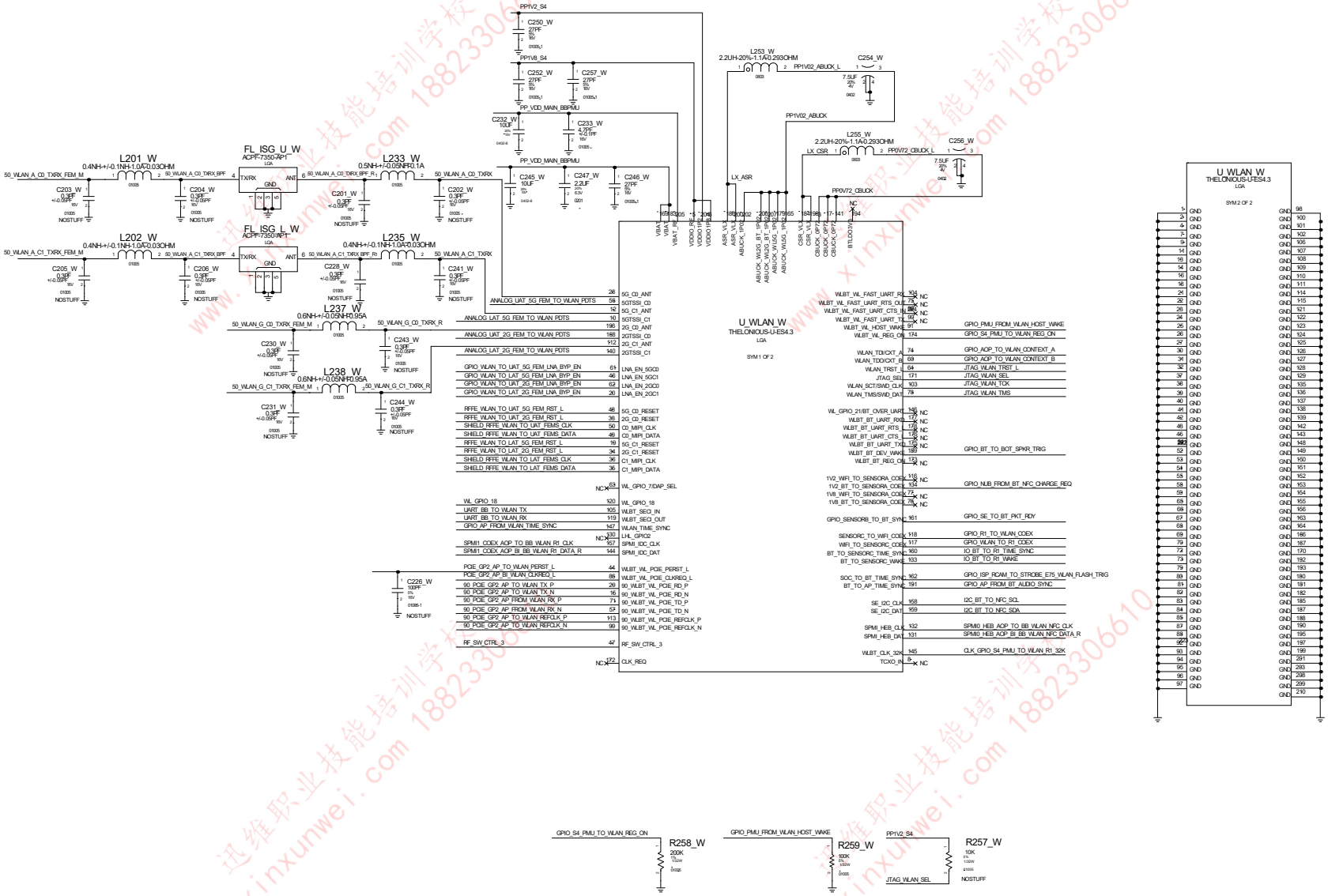

Number	8

鑫智造图纸
XZZ drawing

迅维职业技能培训学校 www.xinxunwei.com 18823306610

PP222_W	1	PCIE_GP2_AP_TO_WLAN_PERST_L
PP223_W	1	PCIE_GP2_AP_BI_WLAN_CLKREQ_L
PP224_W	1	90_PCIE_GP2_AP_TO_WLAN_TX_P
PP225_W	1	90_PCIE_GP2_AP_TO_WLAN_TX_N
PP226_W	1	90_PCIE_GP2_AP_FROM_WLAN_RX_P
PP227_W	1	90_PCIE_GP2_AP_FROM_WLAN_RX_N
PP228_W	1	90_PCIE_GP2_AP_TO_WLAN_REFCLK_P
PP229_W	1	90_PCIE_GP2_AP_TO_WLAN_REFCLK_N

PP251_W	1	GPIO_WLAN_TO_UAT_5G_FEM_LNA_BYP_EN
PP252_W	1	GPIO_WLAN_TO_UAT_5G_FEM_LNA_BYP_EN
PP253_W	1	GPIO_WLAN_TO_UAT_2G_FEM_LNA_BYP_EN
PP254_W	1	GPIO_WLAN_TO_UAT_2G_FEM_LNA_BYP_EN
PP255_W	1	RFFE_WLAN_TO_UAT_5G_FEM_RST_L
PP256_W	1	RFFE_WLAN_TO_UAT_5G_FEM_RST_L
PP257_W	1	RFFE_WLAN_TO_UAT_2G_FEM_RST_L
PP258_W	1	RFFE_WLAN_TO_UAT_2G_FEM_RST_L

PP207_W	1	WL_GPIO_18
PP240_W	1	UART_BB_TO_WLAN_TX
PP241_W	1	UART_BB_TO_WLAN_RX
PP242_W	1	GPIO_AP_FROM_WLAN_TIME_SYNC
PP243_W	1	RF_SW_CTRL_3
PP261_W	1	SPMI1_COEX_ACP_TO_BB_WLAN_R1_CLK
PP262_W	1	SPMI1_COEX_ACP_TO_BB_WLAN_R1_DATA_R

GPIO_PMU_FROM_WLAN_HOST_WAKE	1	PP244_W
GPIO_S4_PMU_TO_WLAN_REG_ON	1	PP206_W
GPIO_ACP_TO_WLAN_CONTEXT_A	1	PP201_W
GPIO_ACP_TO_WLAN_CONTEXT_B	1	PP202_W
JTAG_WLAN_TRST_L	1	PP203_W
JTAG_WLAN_SEL	1	PP232_W
JTAG_WLAN_TCK	1	PP204_W
JTAG_WLAN_TMS	1	PP205_W
GPIO_BT_TO_BOT_SPKR_TRIG	1	PP210_W
GPIO_NUB_FROM_BT_NFC_CHARGE_REQ	1	PP263_W
GPIO_SE_TO_BT_PKT_RDY	1	PP211_W
GPIO_R1_TO_WLAN_COEX	1	PP233_W
GPIO_WLAN_TO_R1_COEX	1	PP234_W
IO_BT_TO_R1_TIME_SYNC	1	PP235_W
IO_BT_TO_R1_WAKE	1	PP212_W
GPIO_ISP_ROAM_TO_STROBE_E75_WLAN_FLASH_TRIG	1	PP213_W
GPIO_AP_FROM_BT_AUDIO_SYNC	1	PP236_W
I2C_BT_TO_NFC_SCL	1	PP237_W
I2C_BT_TO_NFC_SDA	1	PP238_W
SPMI0_HEB_ACP_TO_BB_WLAN_NFC_CLK	1	PP214_W
SPMI0_HEB_ACP_BI_BB_WLAN_NFC_DATA_R	1	PP215_W
CLK_GPIO_S4_PMU_TO_WLAN_R1_32K	1	PP239_W

迅维职业技能培训学校 www.xinxunwei.com 18823306610

Number 9

鑫智造图纸
XZZ drawing

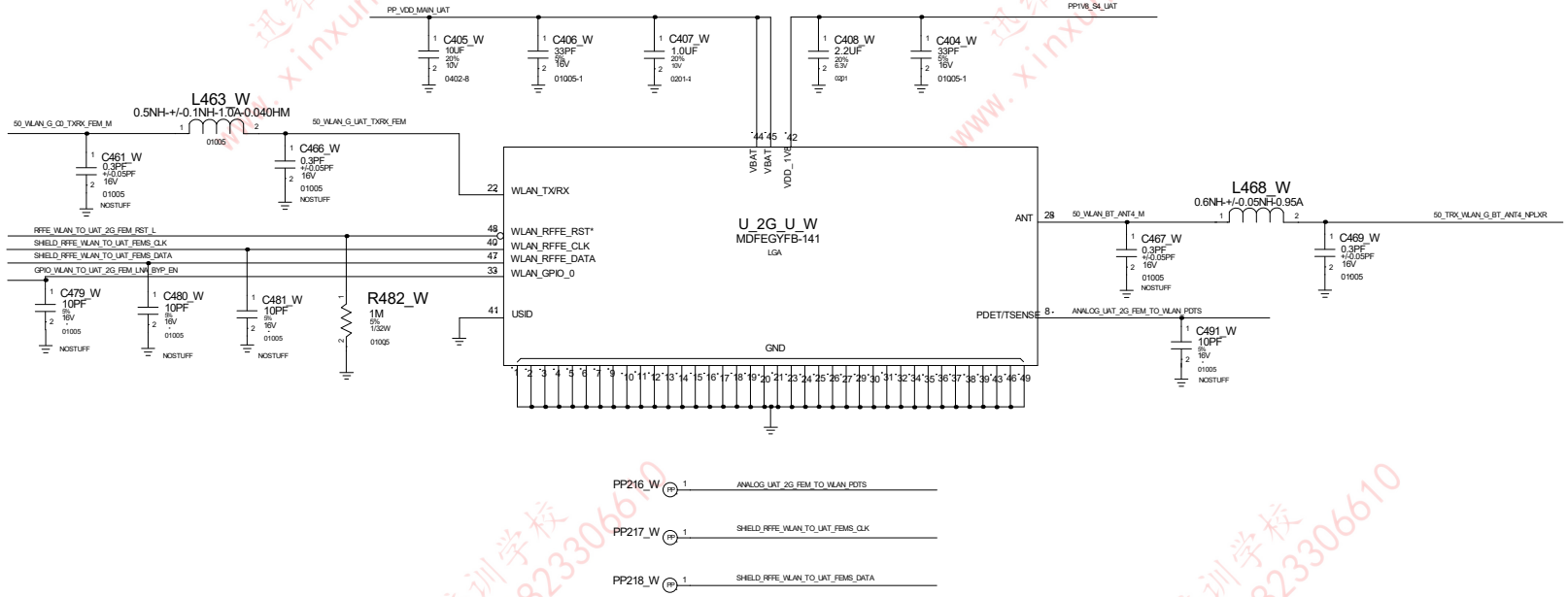

迅维职业技能培训学校
www.xinxunwei.com 18823306610

Number	10

鑫智造图纸
XZZ drawing

BB PMU: SMPS

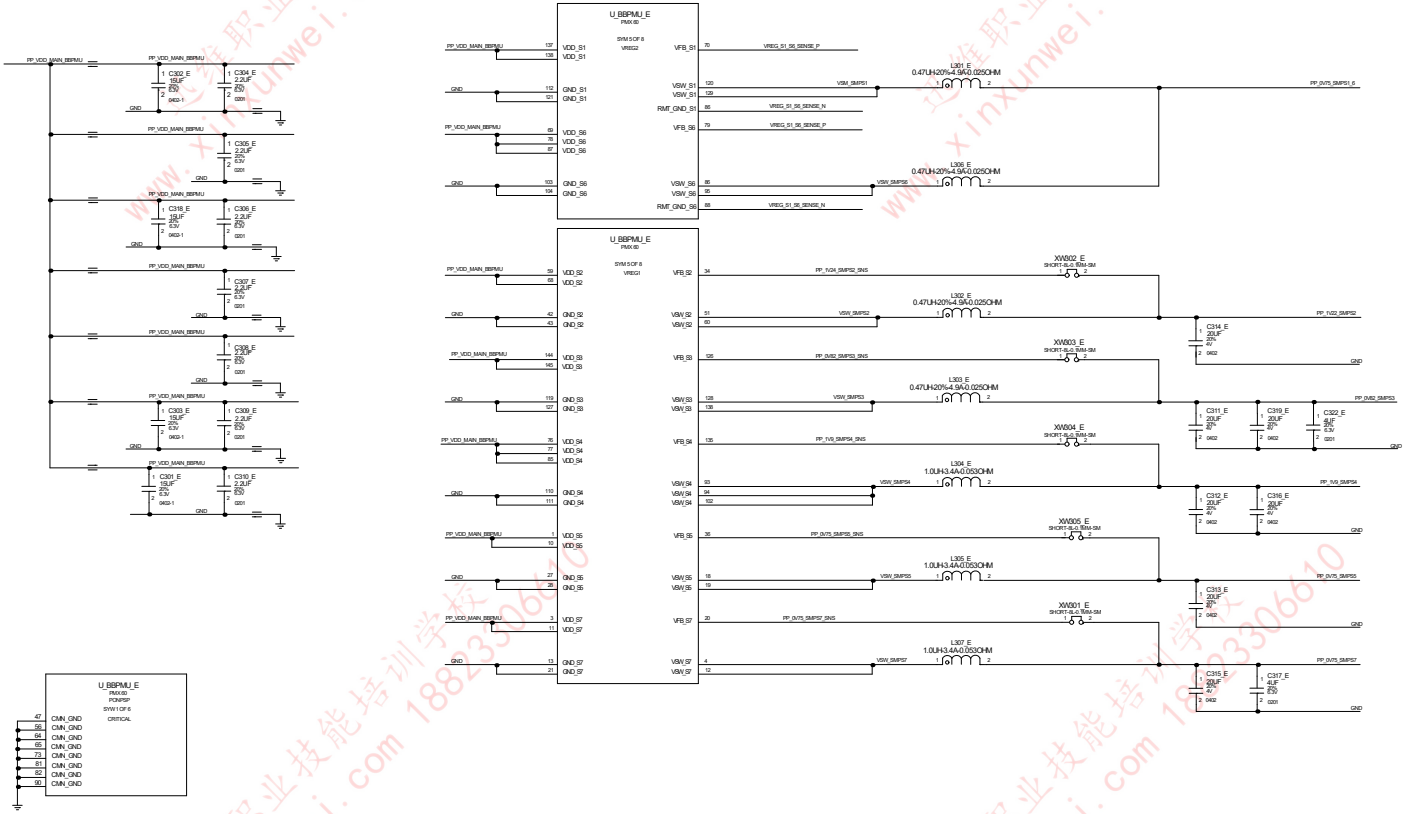

迅维职业技能培训学校
www.xinxunwei.com 18823306610

Number 11

鑫智造图纸
XZZ drawing

BB PMU: LDOS

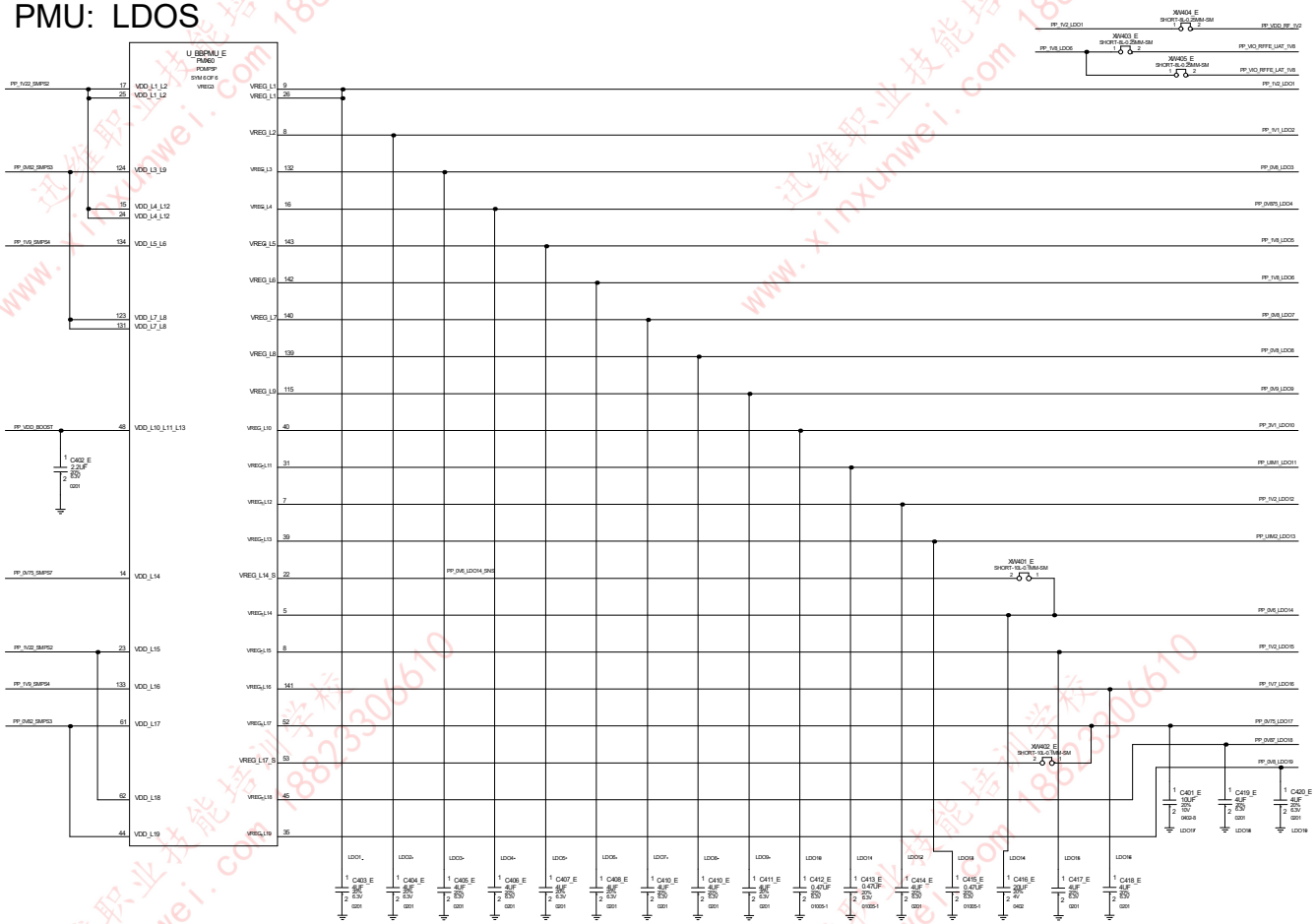

Number 12

鑫智造图纸
XZZ drawing

迅维职业技能培训学校 www.xinxunwei.com 18823306610

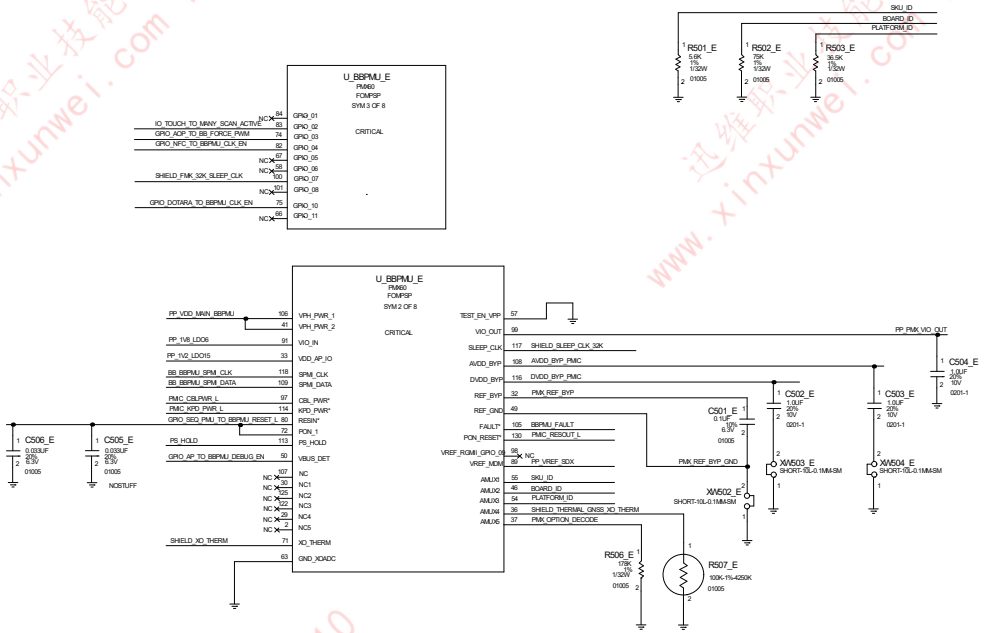

STUFF ONLY FOR VENDOR CONFIG

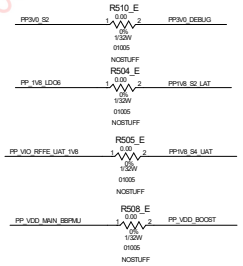

迅维职业技能培训学校
www.xinxunwei.com 18823306610

Number 13

鑫智造图纸
XZZ drawing

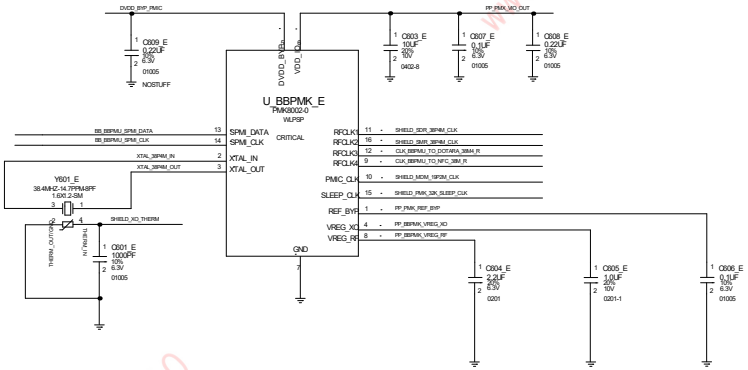

迅维职业技能培训学校
www.xinxunwei.com 18823306610

Number 14

鑫智造图纸
XZZ drawing

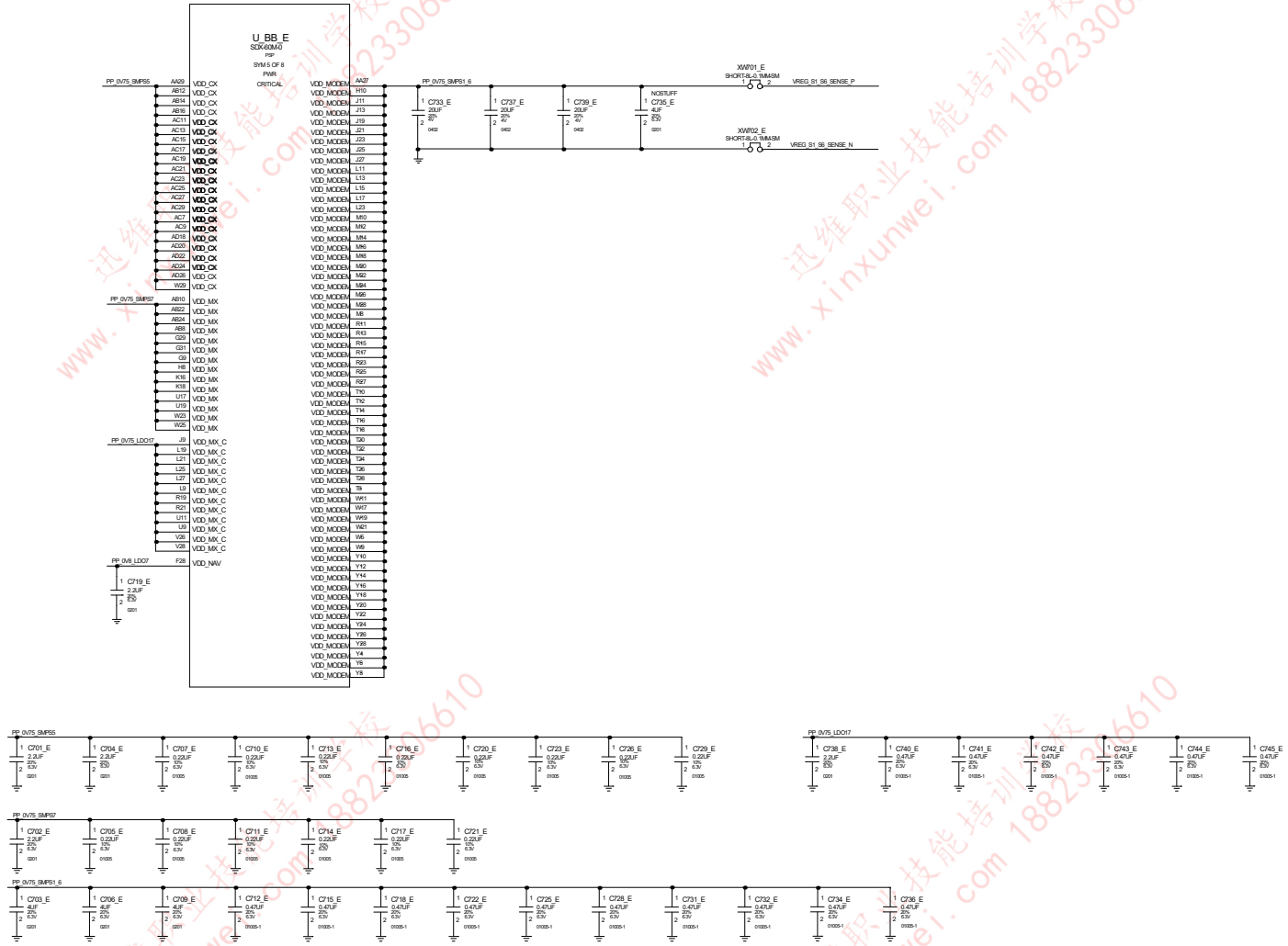

Number 15

鑫智造图纸
XZZ drawing

迅维职业技能培训学校 www.xinxunwei.com 18823306610

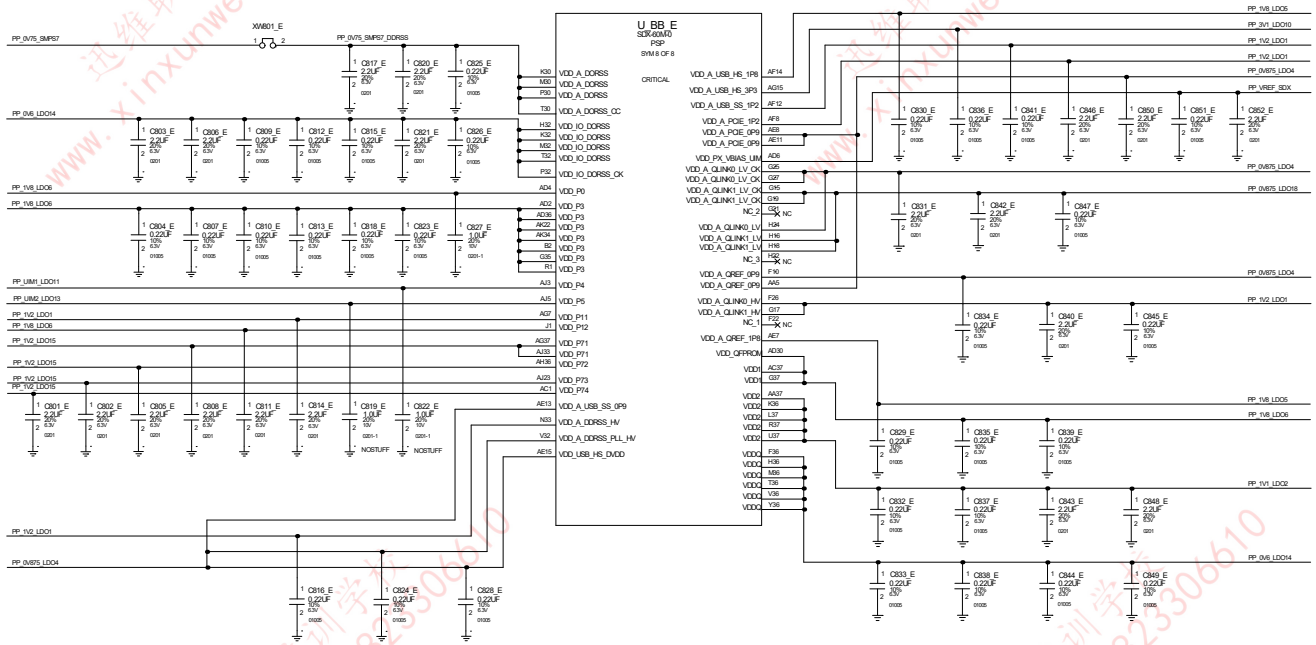

迅维职业技能培训学校 www.xinxunwei.com 18823306610

Number16

鑫智造图纸
XZZ drawing

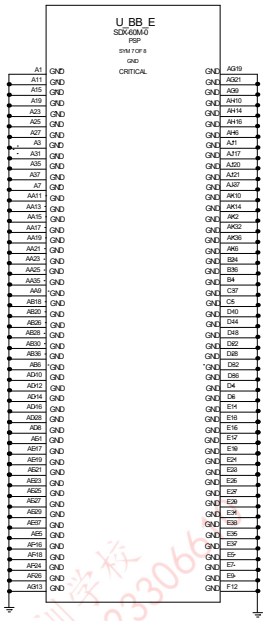

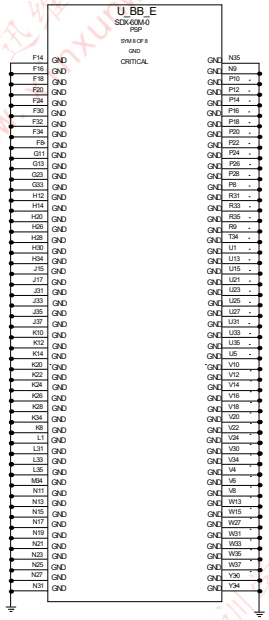

迅维职业技能培训学校
www.xinxunwei.com 18823306610

Number 17

鑫智造图纸
XZZ drawing

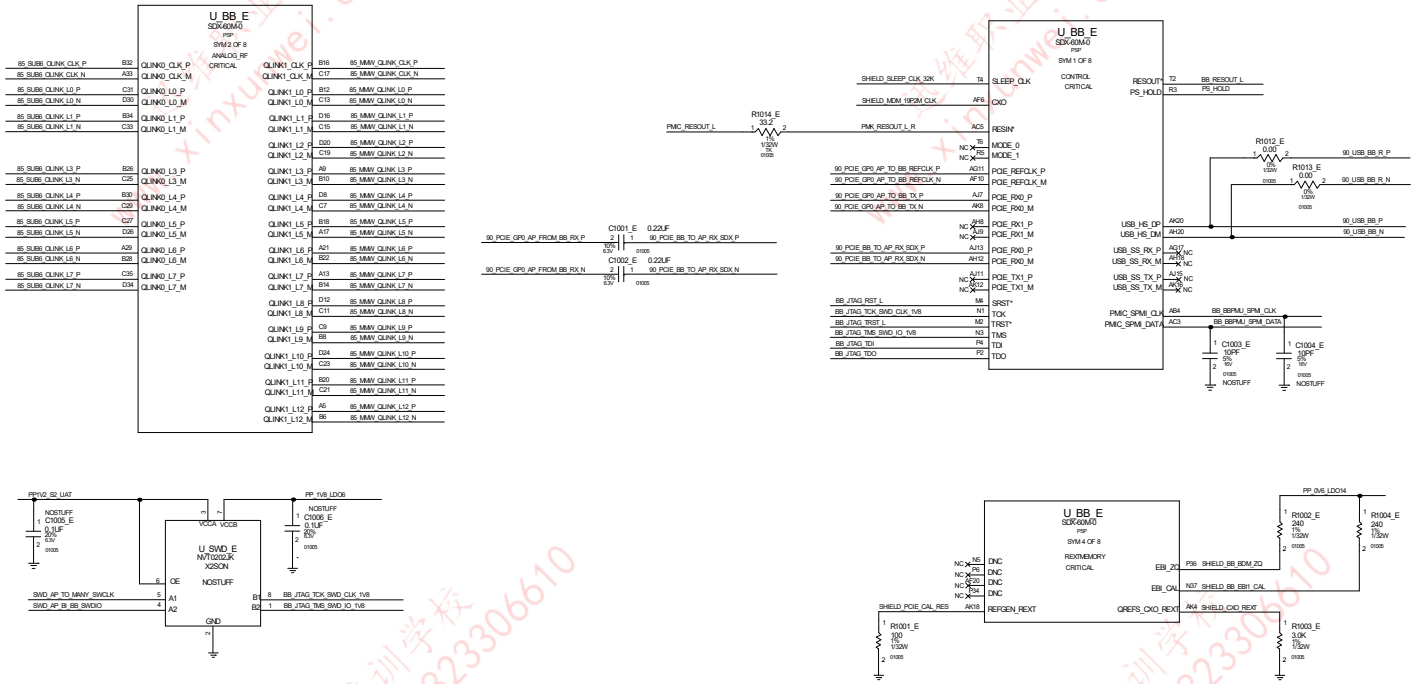

Number 18

鑫智造图纸
XZZ drawing

迅维职业技能培训学校 www.xinxunwei.com 18823306610

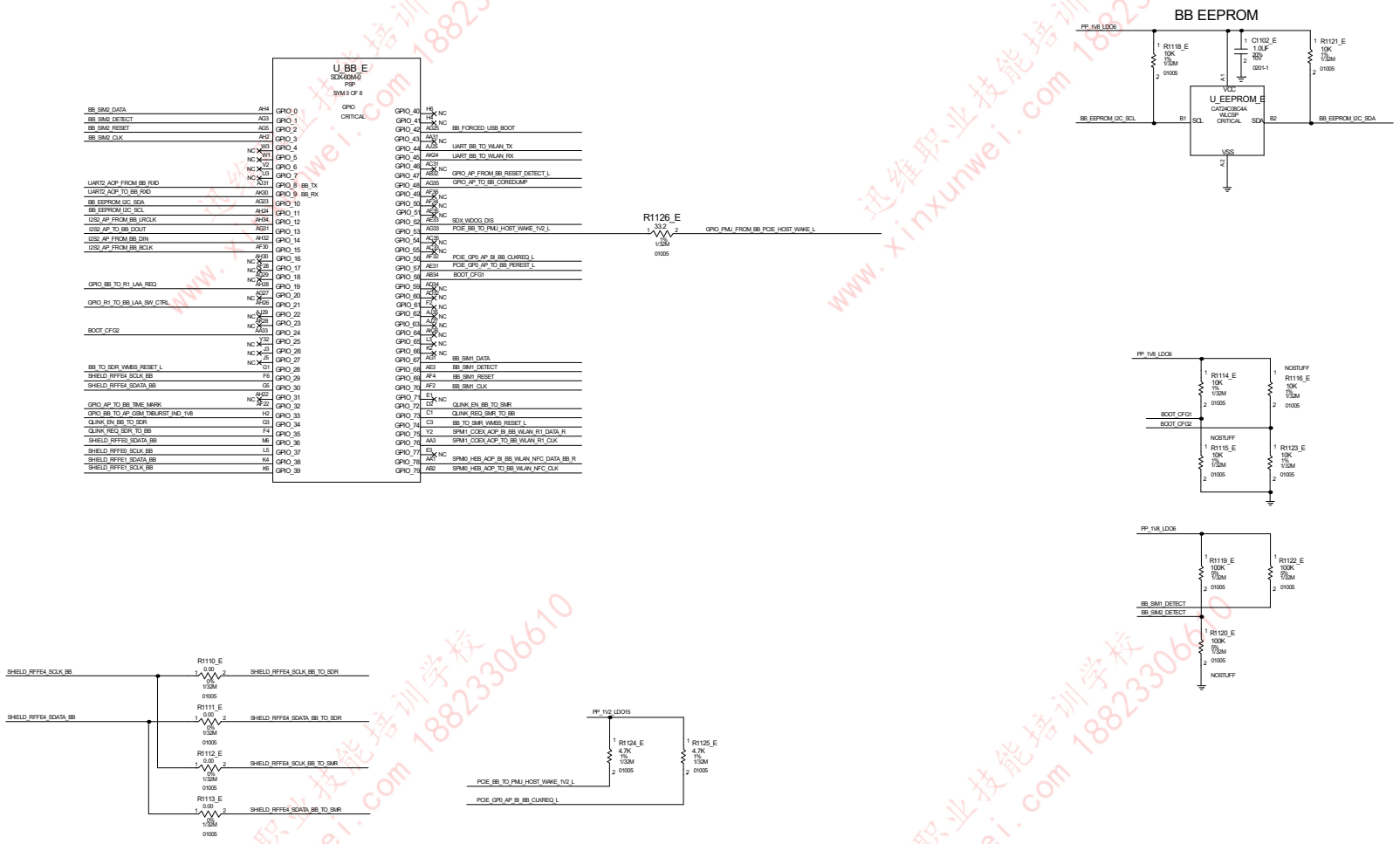

Number19

鑫智造图纸
XZZ drawing

迅维职业技能培训学校
www.xinxunwei.com 18823306610

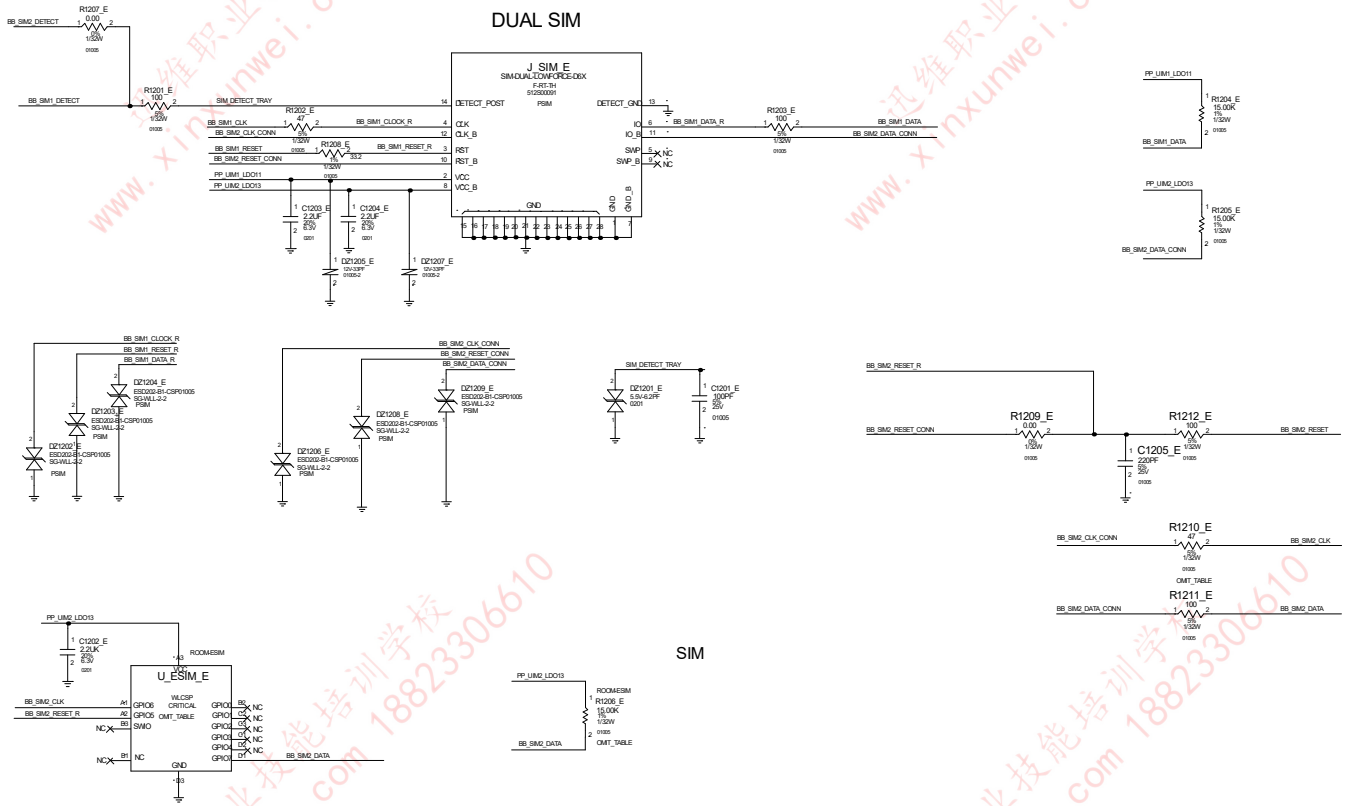

迅维职业技能培训学校
www.xinxunwei.com 18823306610

Number20

鑫智造图纸
XZZ drawing

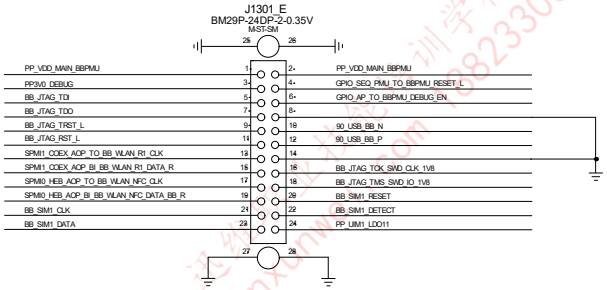

AP POWER

PP1301_E
PP1302_E
PP1303_E

I2S

PP1304_E
PP1305_E
PP1306_E
PP1307_E

PP1308_E

PP1309_E

PP1355_E

PP1358_E

PCIE

PP1310_E
PP1311_E
PP1312_E
PP1313_E
PP1314_E
PP1315_E
PP1316_E
PP1317_E
PP1318_E

CLOCKS

PP1319_E
PP1320_E
PP1321_E

PP1323_E
PP1324_E
PP1325_E

BASEBAND

PP13015_E
PP1326_E
PP1327_E
PP1356_E
PP1357_E

PP1328_E
PP1329_E
PP1330_E
PP1331_E
PP1332_E
PP1333_E
PP1334_E
PP1335_E
PP1336_E
PP1337_E

PP1341_E
PP1342_E
PP1339_E
PP1340_E

SWD

PP1343_E
PP1344_E

QLINK

PP1347_E
PP1348_E
PP1349_E
PP1350_E
PP1351_E
PP1352_E
PP1353_E
PP1354_E

POWER

PP1359_E
PP1360_E
PP1361_E
PP1362_E
PP1363_E
PP1364_E
PP1365_E
PP1366_E
PP1367_E
PP1368_E
PP13019_E
PP13020_E
PP13016_E

GNSS

PP1345_E
PP1346_E

POWER

PP1369_E
PP1370_E
PP1371_E
PP1372_E
PP1373_E
PP1374_E
PP1375_E
PP1376_E
PP1377_E
PP1378_E
PP1379_E
PP1380_E
PP1381_E
PP1382_E

BB RFFE

PP1387_E
PP1388_E
PP1389_E
PP1390_E
PP1391_E
PP1392_E

迅维职业技能培训学校 www.xinxunwei.com 18823306610

Number 21

鑫智造图纸
XZZ drawing

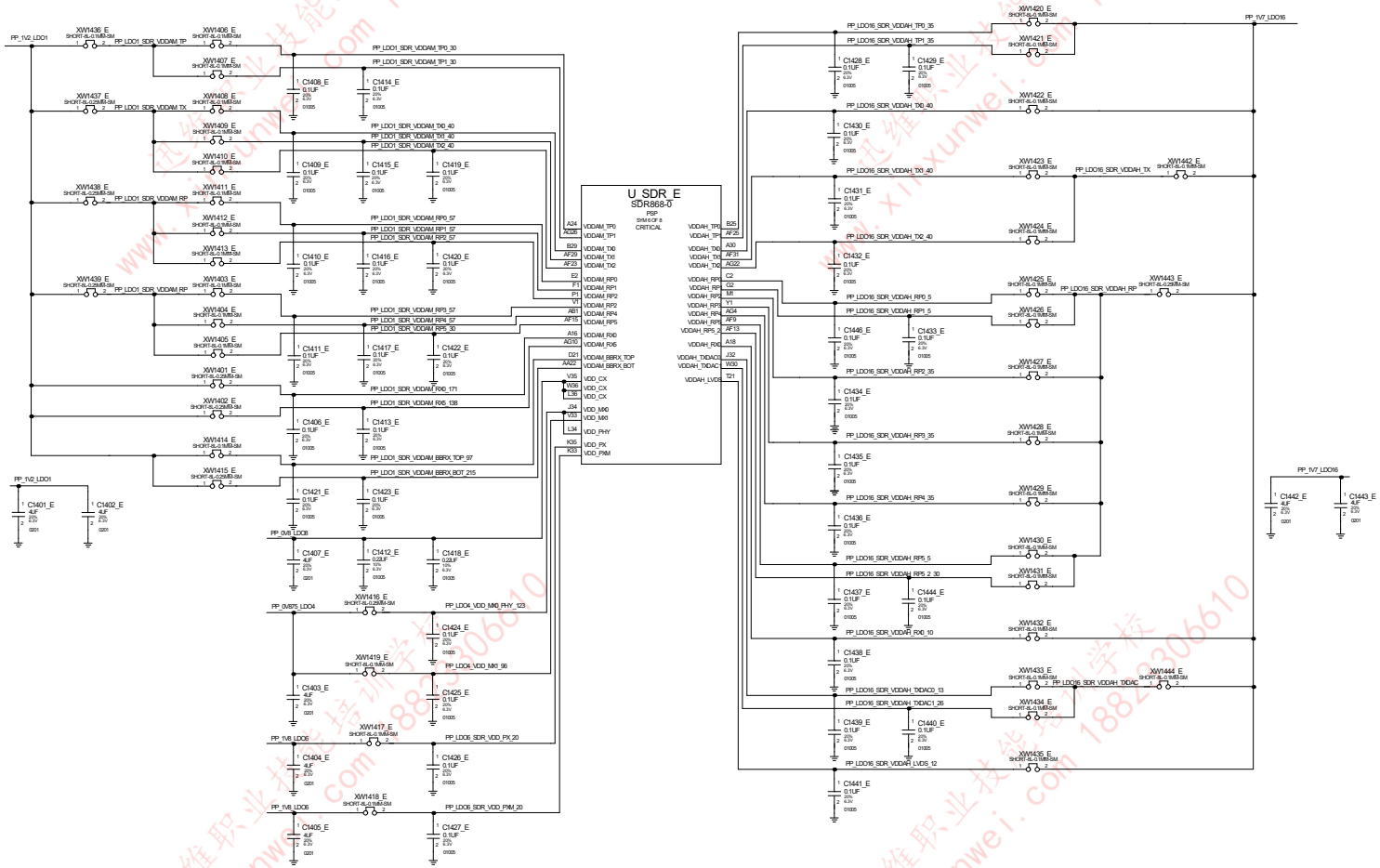

迅维职业技能培训学校 www.xinxunwei.com 18823306610

Number 22

鑫智造图纸
XZZ drawing

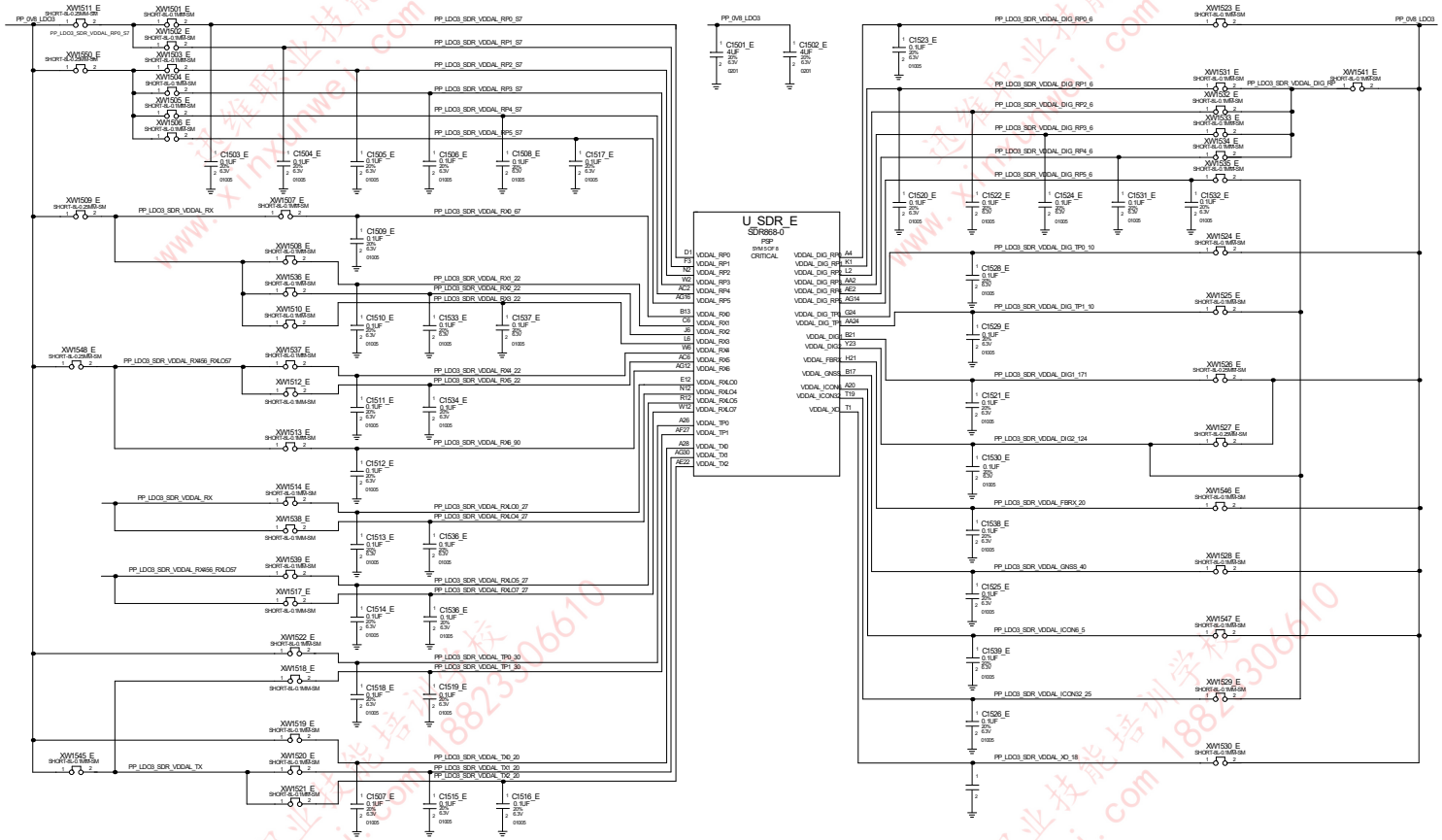

迅维职业技能培训学校 www.xinxunwei.com 18823306610

Number 23

鑫智造图纸
XZZ drawing

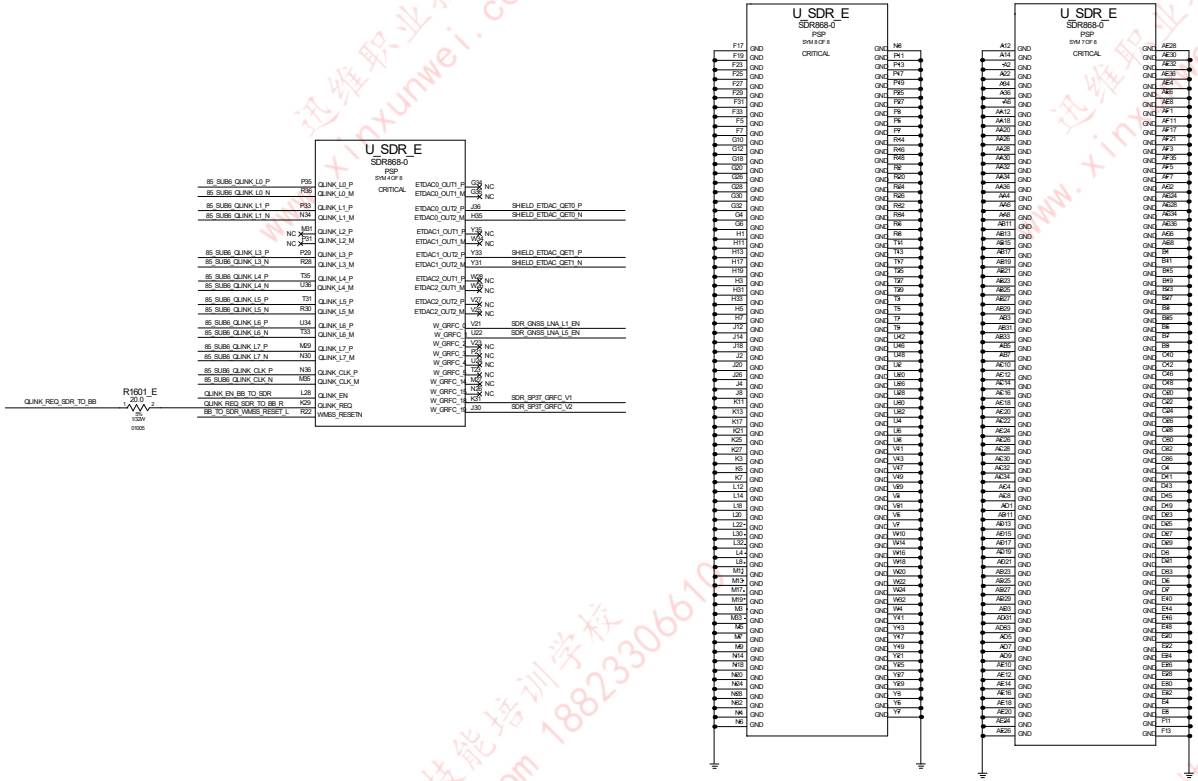

迅维职业技能培训学校
www.xinxunwei.com 18823306610

Number 24

鑫智造图纸
XZZ drawing

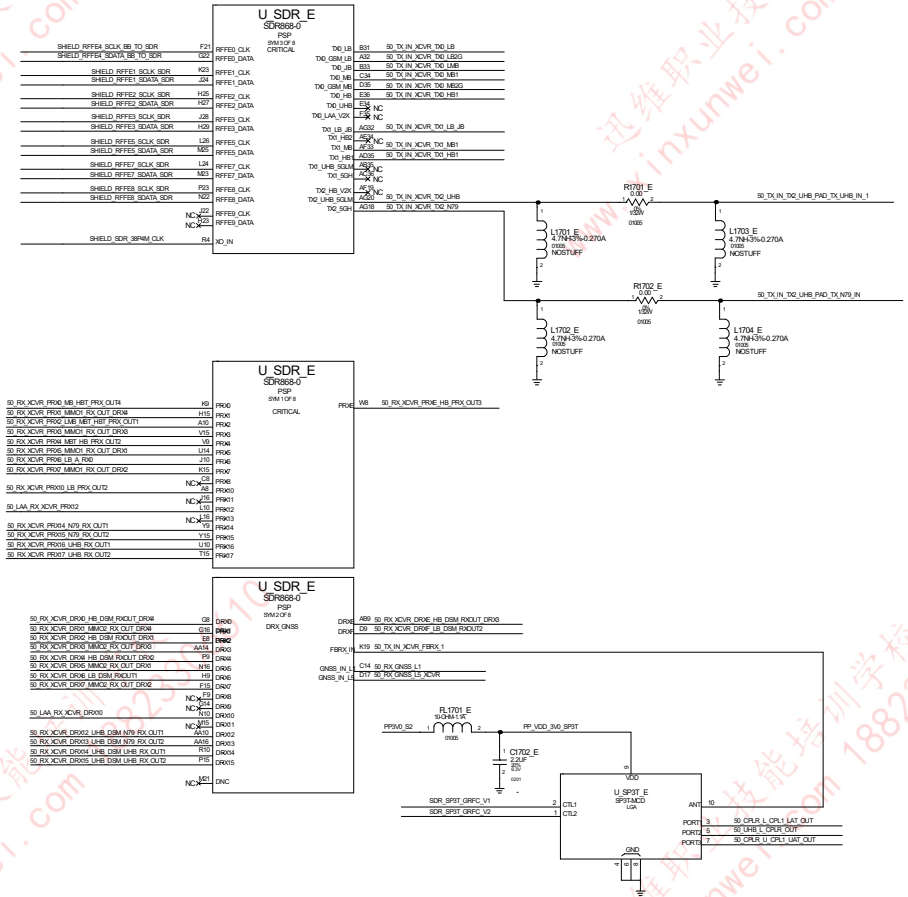

迅维职业技能培训学校 www.xinxunwei.com 18823306610

Number	25

鑫智造图纸
XZZ drawing

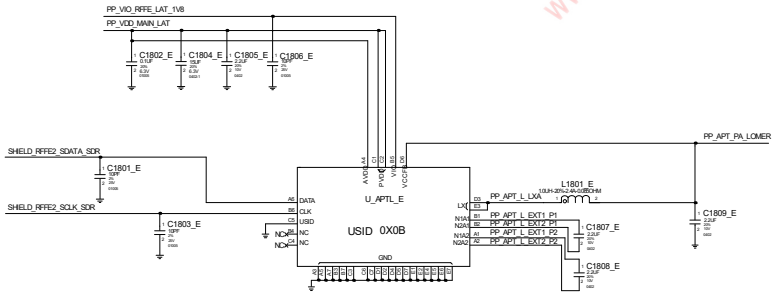

迅维职业技能培训学校
www.xinxunwei.com 18823306610

Number 26

鑫智造图纸
XZZ drawing

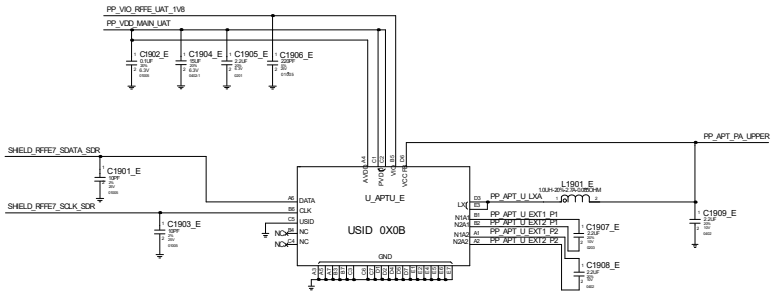

迅维职业技能培训学校
www.xinxunwei.com 18823306610

Number 27

鑫智造图纸
XZZ drawing

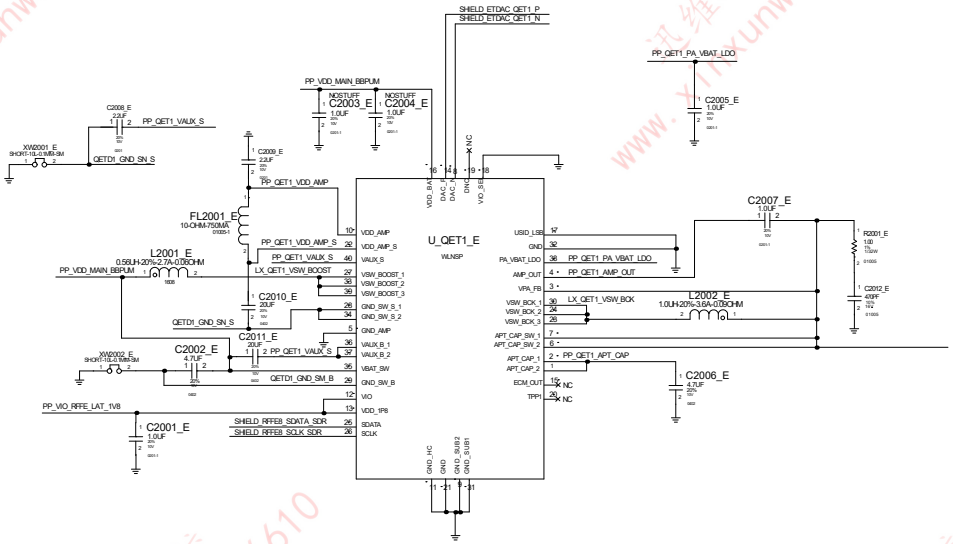

迅维职业技能培训学校
www.xinxunwei.com 18823306610

Number 28

鑫智造图纸
XZZ drawing

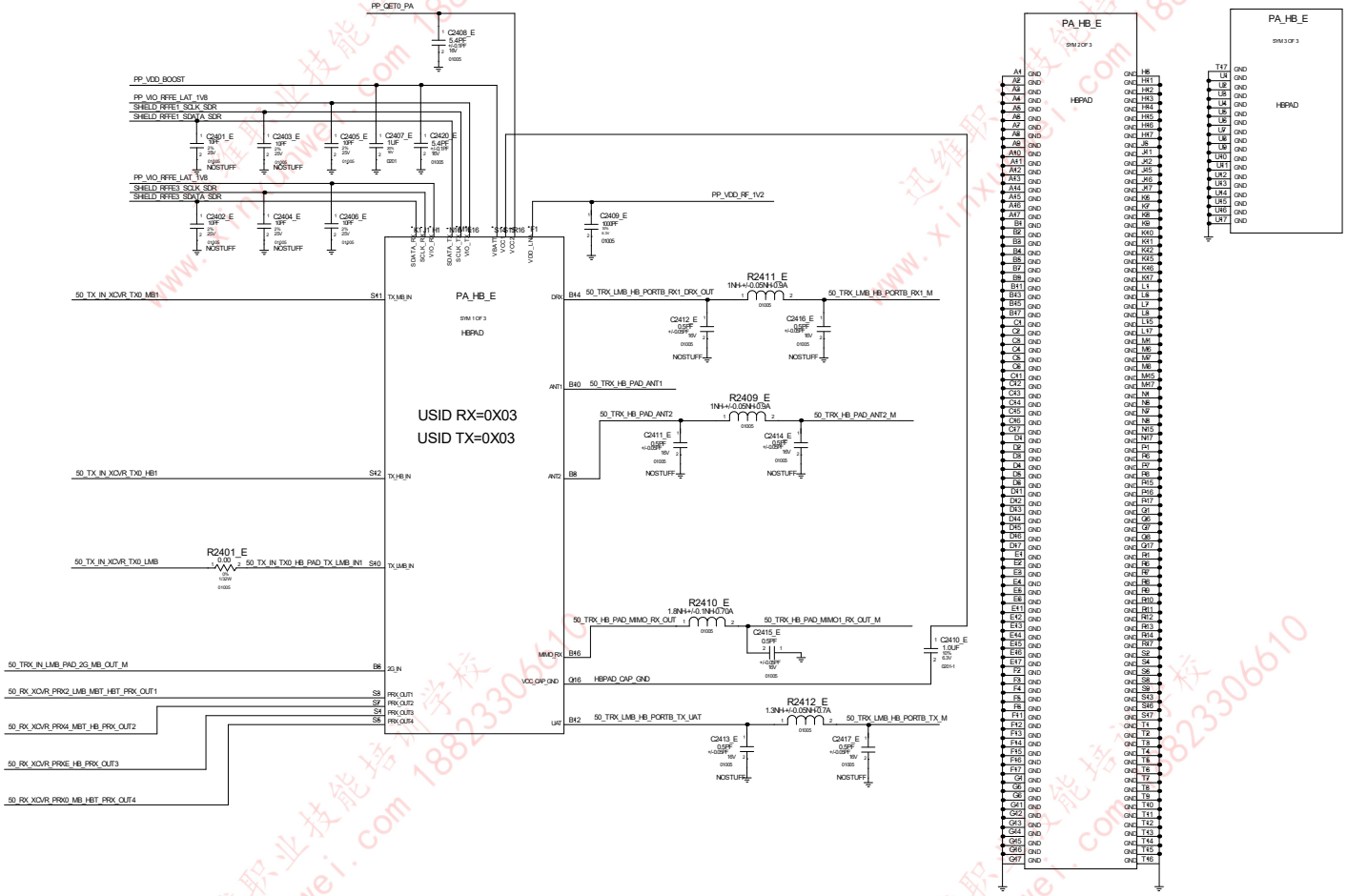

Number	29
鑫智造图纸 XZZ drawing	

迅维职业技能培训学校 www.xinxunwei.com 18823306610

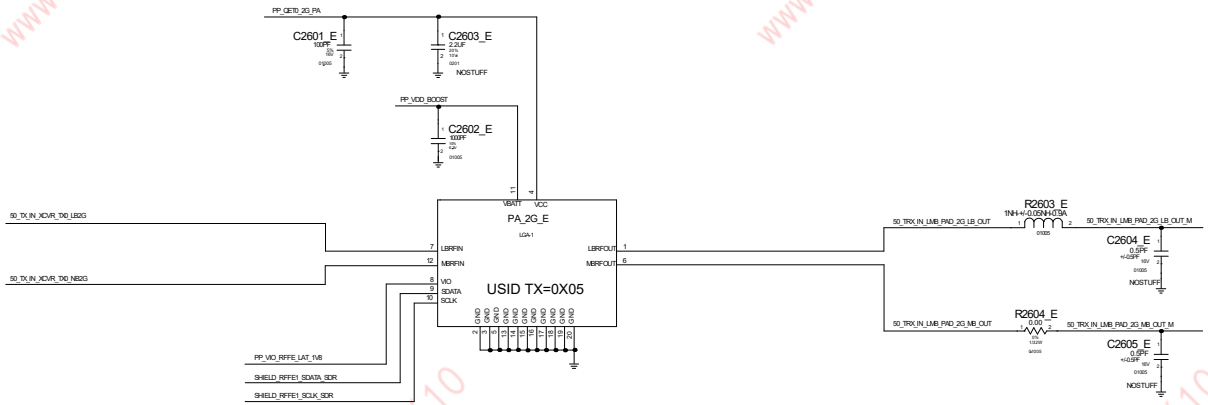

迅维职业技能培训学校
www.xinxunwei.com 18823306610

Number	30
鑫智造图纸 XZZ drawing	

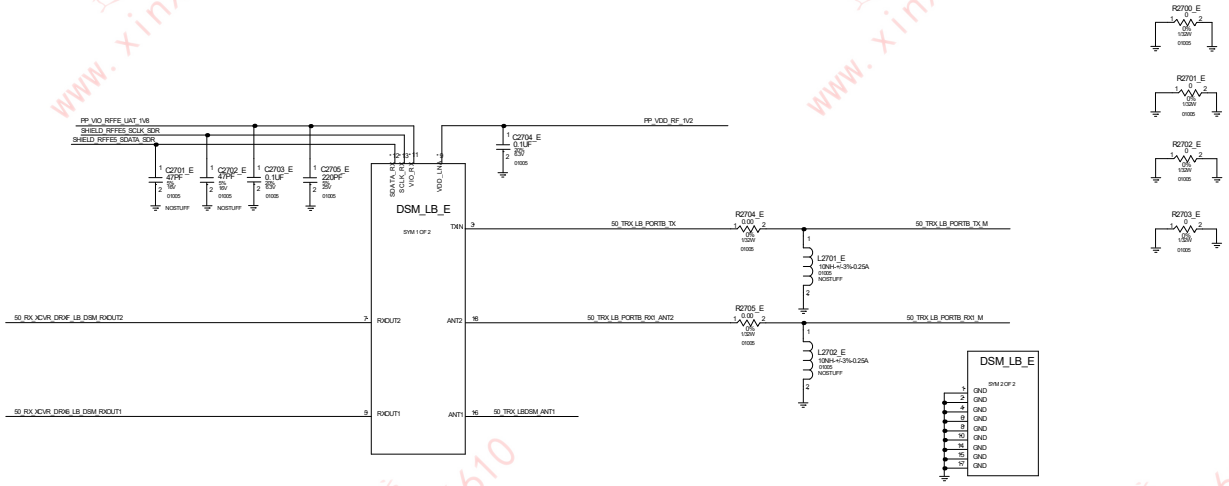

迅维职业技能培训学校
www.xinxunwei.com 18823306610

Number31

鑫智造图纸
XZZ drawing

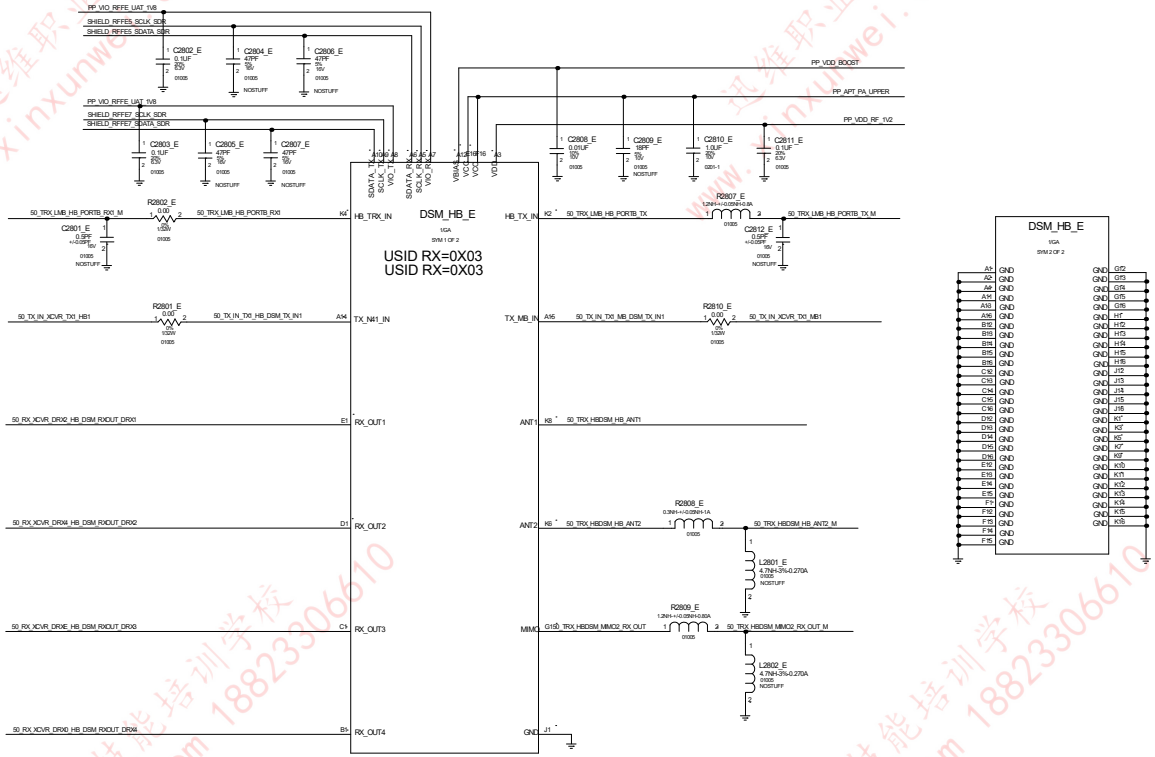

Number32

鑫智造图纸
XZZ drawing

迅维职业技能培训学校 www.xinxunwei.com 18823306610

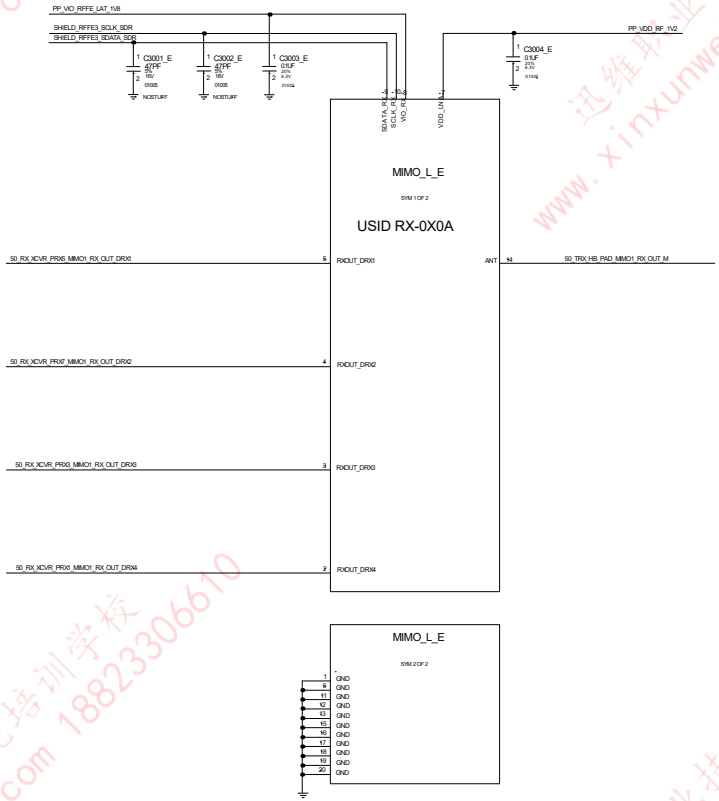

迅维职业技能培训学校
www.xinxunwei.com 18823306610

Number33

鑫智造图纸
XZZ drawing

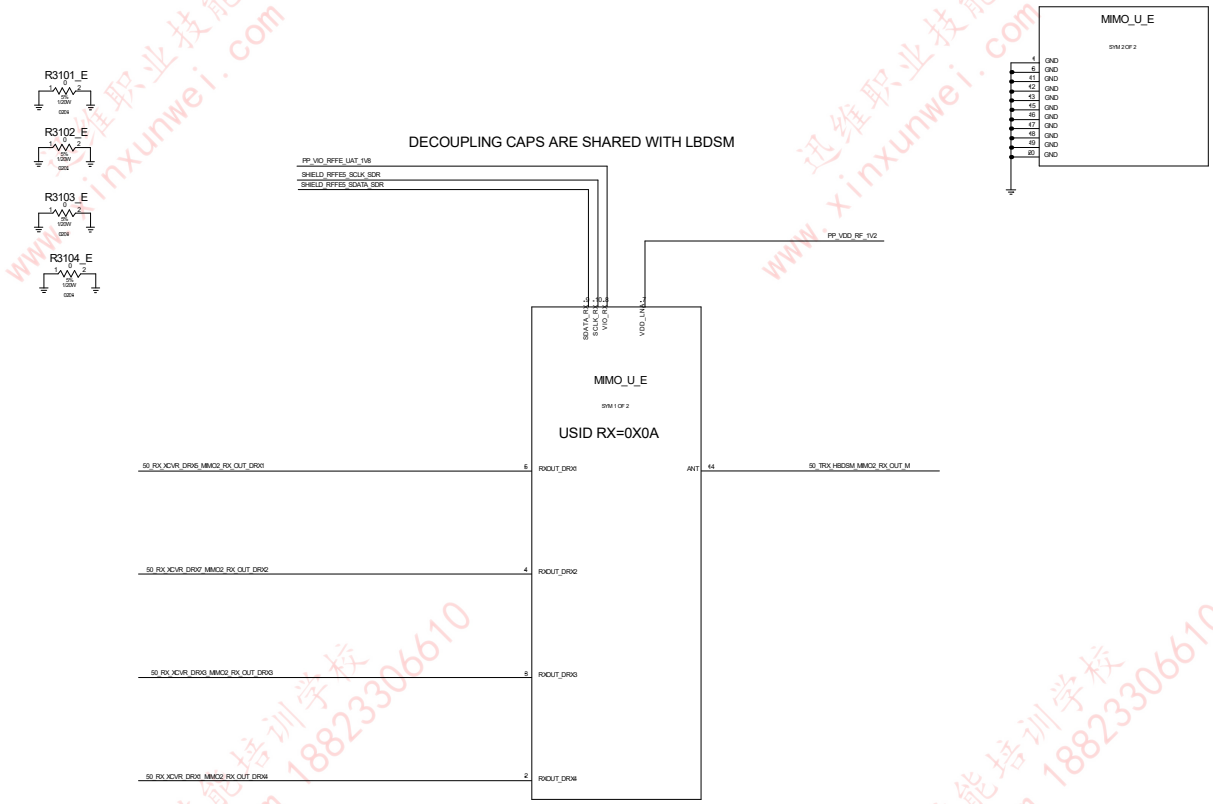

迅维职业技能培训学校 www.xinxunwei.com 18823306610

Number34

鑫智造图纸
XZZ drawing

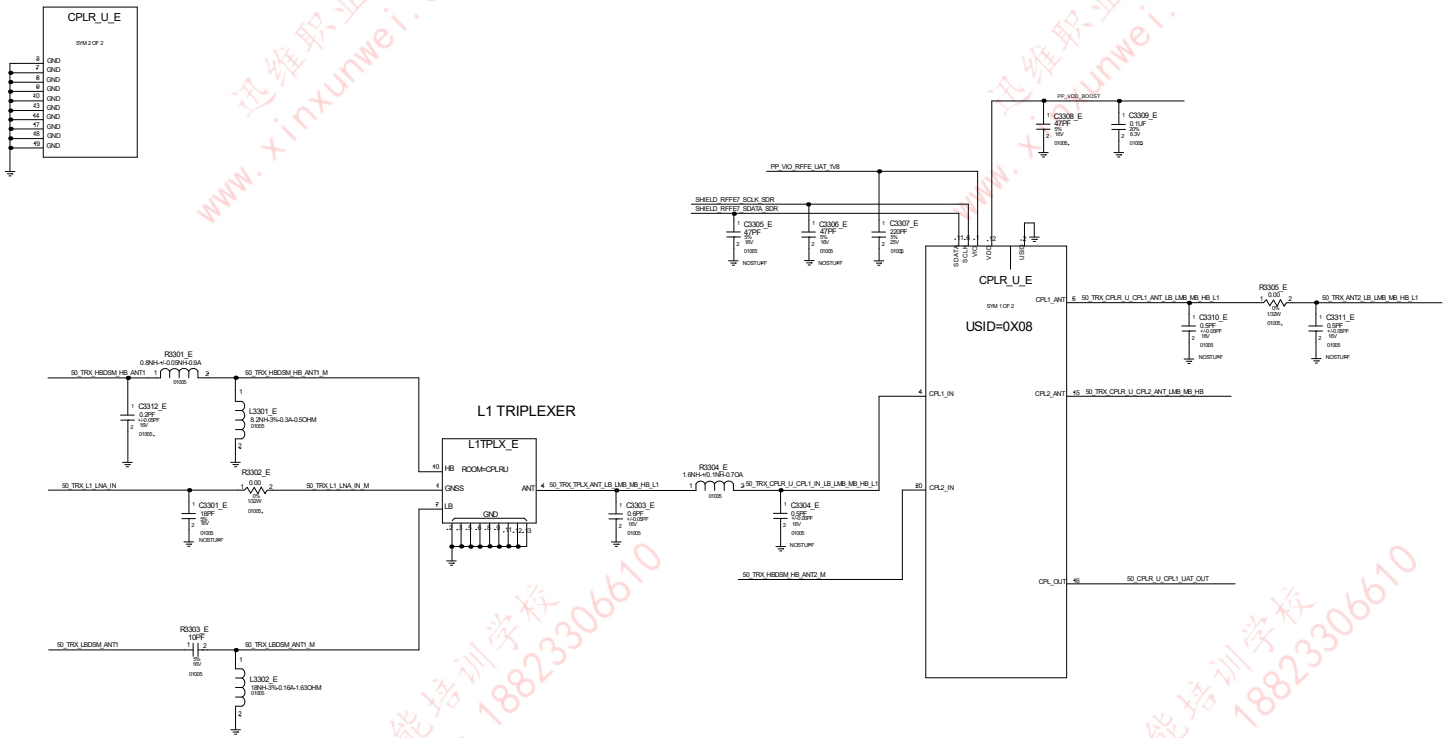

迅维职业技能培训学校
www.xinxunwei.com 18823306610

Number35

鑫智造图纸
XZZ drawing

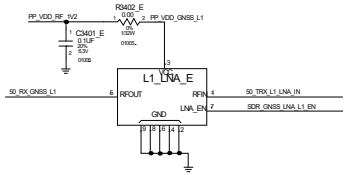

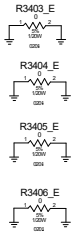

迅维职业技能培训学校
www.xinxunwei.com 18823306610

Number 36

鑫智造图纸
XZZ drawing

3G1 ARRAY

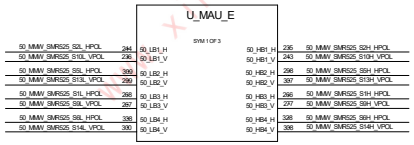

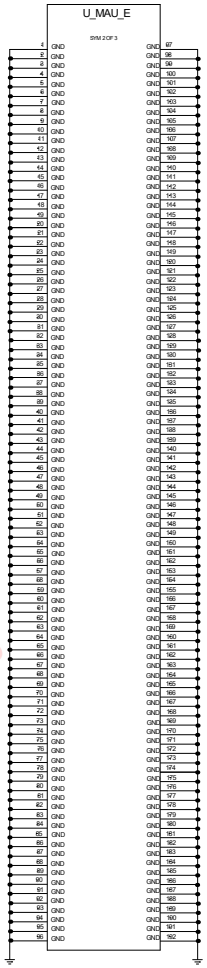

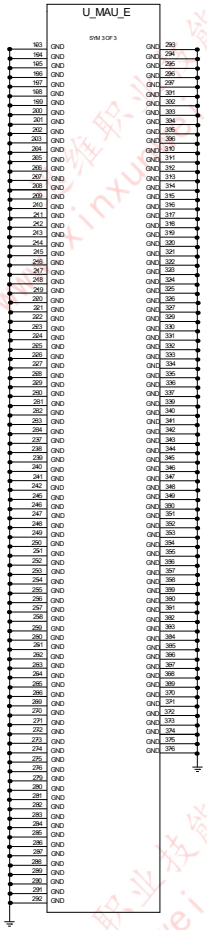

迅维职业技能培训学校 www.xinxunwei.com 18823306610

Number 38

鑫智造图纸
XZZ drawing

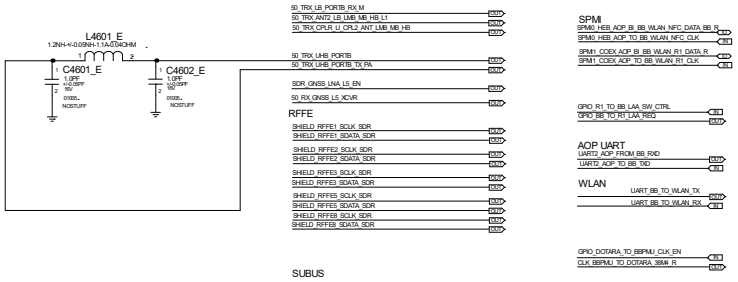

迅维职业技能培训学校
www.xinxunwei.com 18823306610

Number39

鑫智造图纸
XZZ drawing

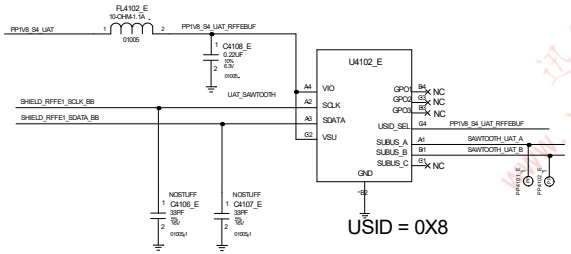

USID = 0X8

ANTENNA SYSTEM LAT

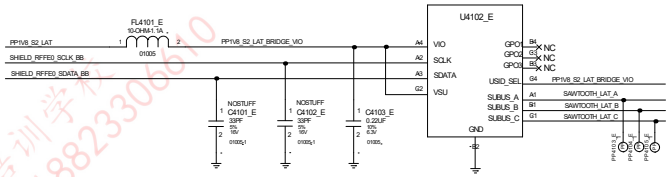

Number40	
鑫智造图纸 XZZ drawing	

迅维职业技能培训学校 www.xinxunwei.com 18823306610

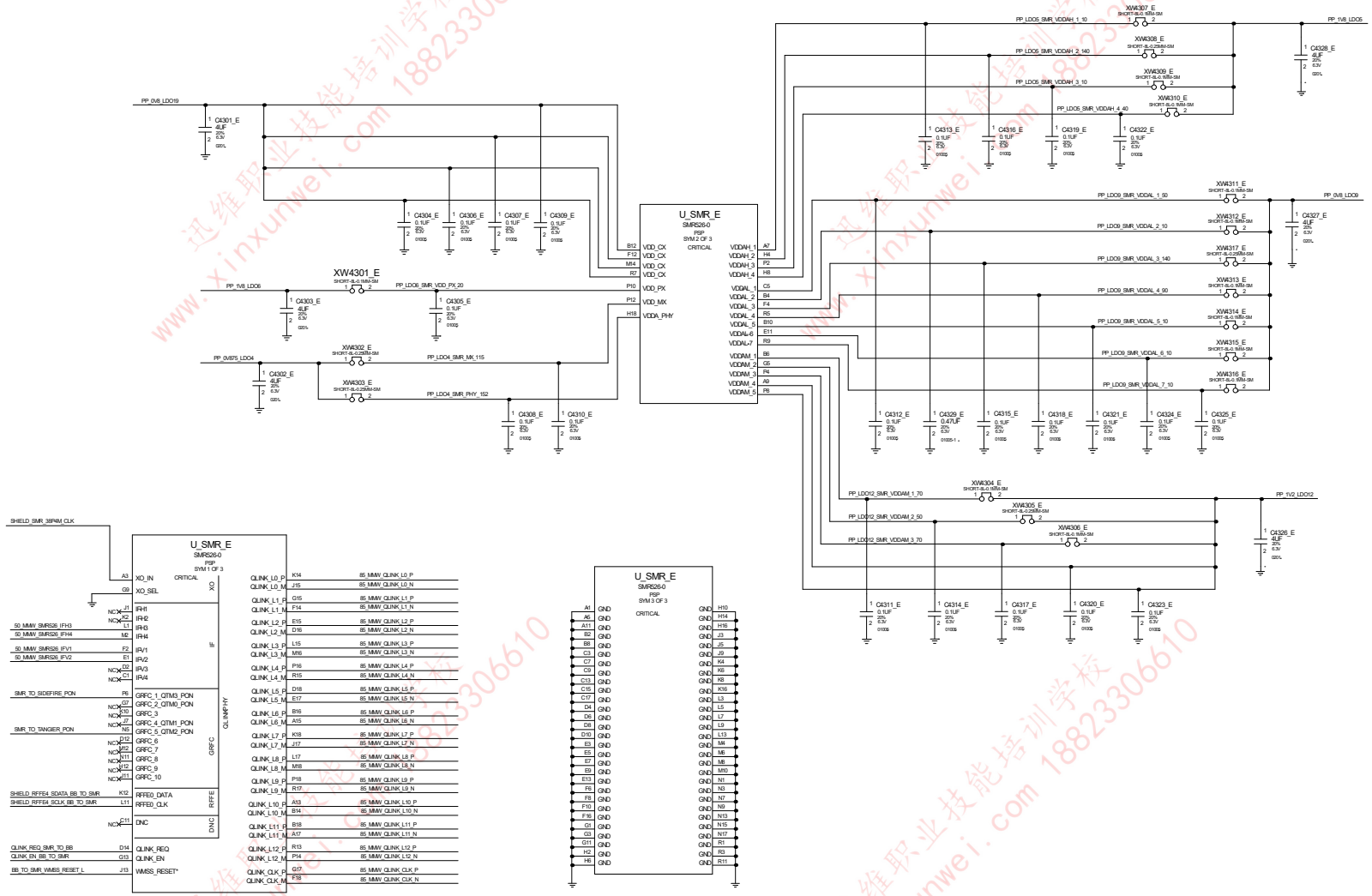

迅维职业技能培训学校 www.xinxunwei.com 18823306610

Number 41

鑫智造图纸
XZZ drawing

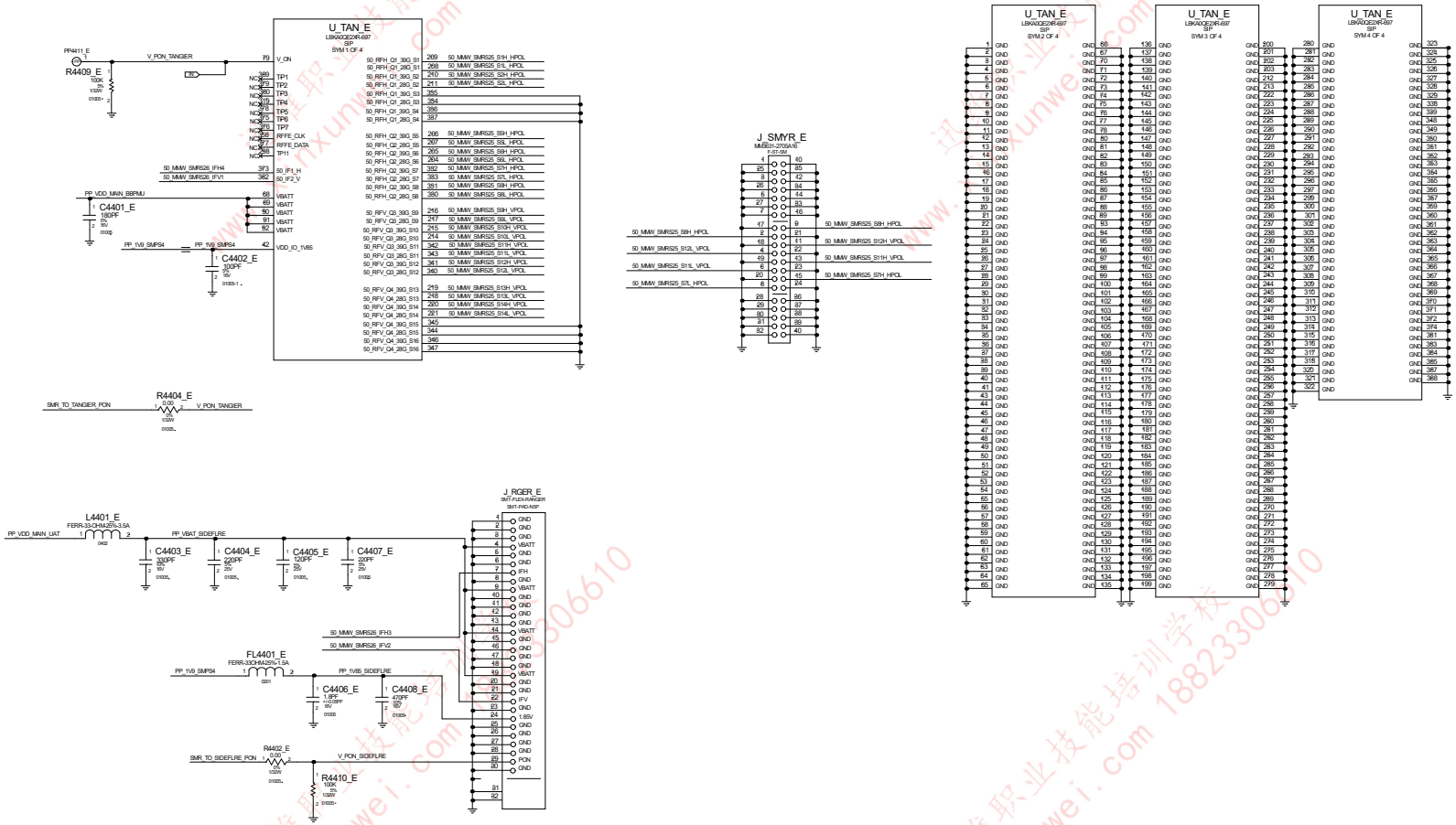

迅维职业技能培训学校 www.xinxunwei.com 18823306610

Number42

鑫智造图纸
XZZ drawing

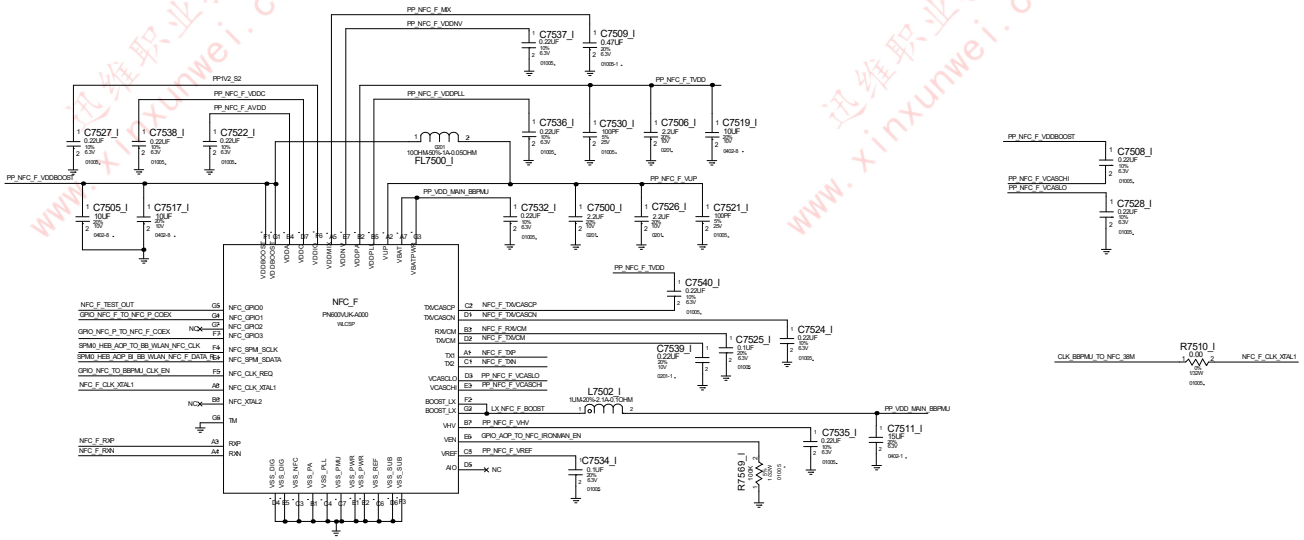

迅维职业技能培训学校
www.xinxunwei.com 18823306610

Number43

鑫智造图纸
XZZ drawing

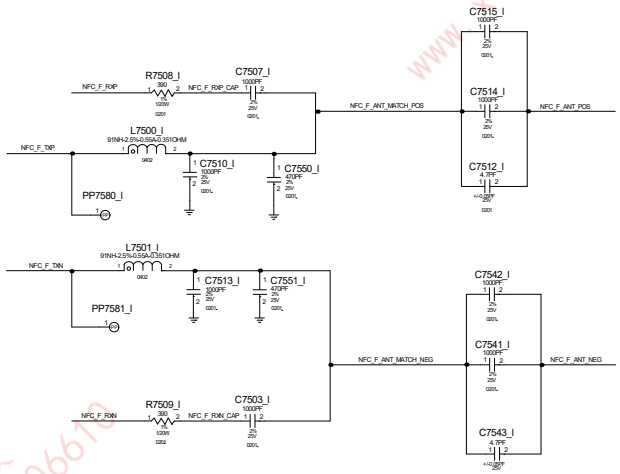

迅维职业技能培训学校
www.xinxunwei.com 18823306610

Number44

鑫智造图纸
XZZ drawing

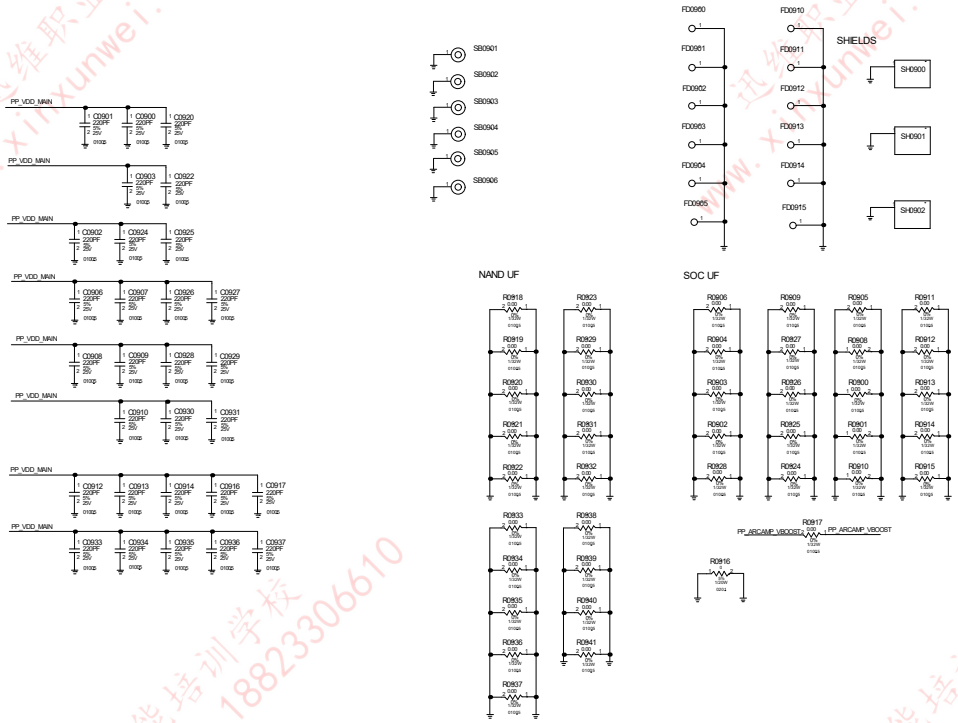

迅维职业技能培训学校 www.xinxunwei.com 18823306610

Number45

鑫智造图纸
XZZ drawing

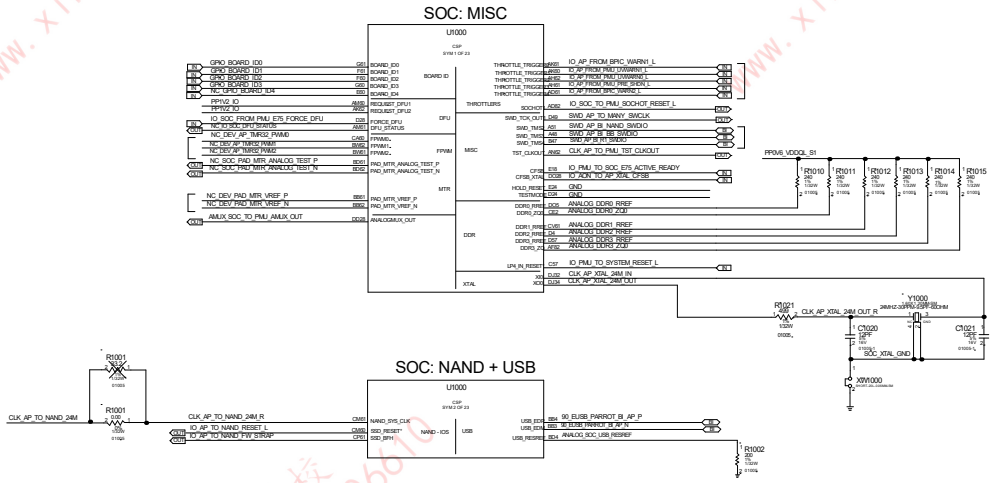

迅维职业技能培训学校
www.xinxunwei.com 18823306610

Number 46

鑫智造图纸
XZZ drawing

SOC: PCIe

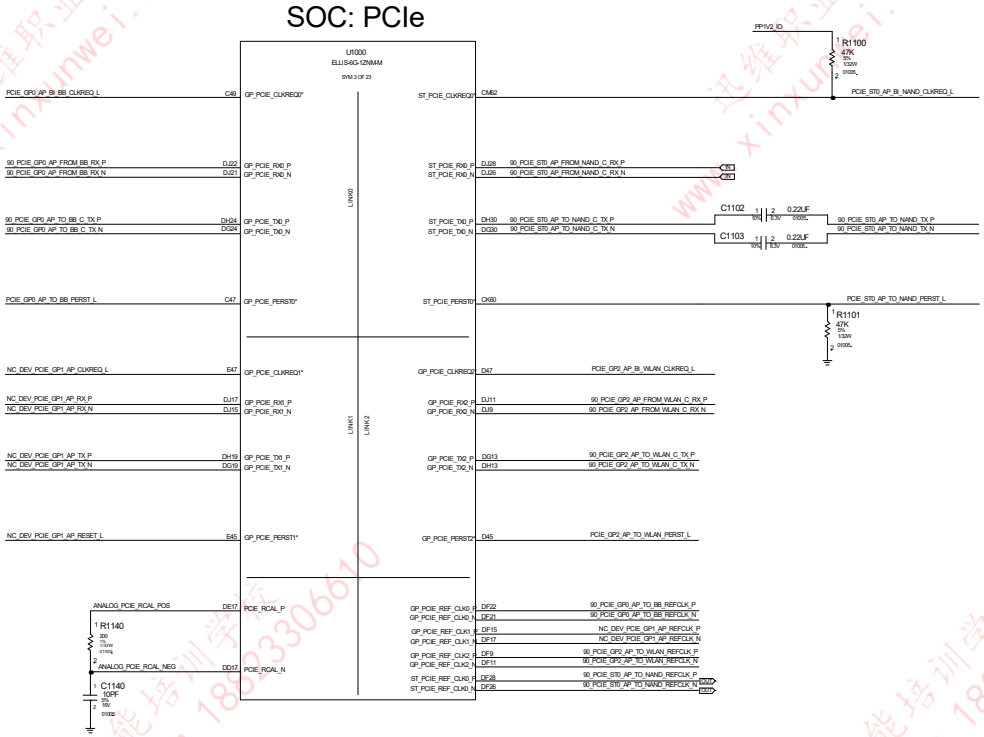

迅维职业技能培训学校 www.xinxunwei.com 18823306610

Number 47

鑫智造图纸
XZZ drawing

SOC: ISP

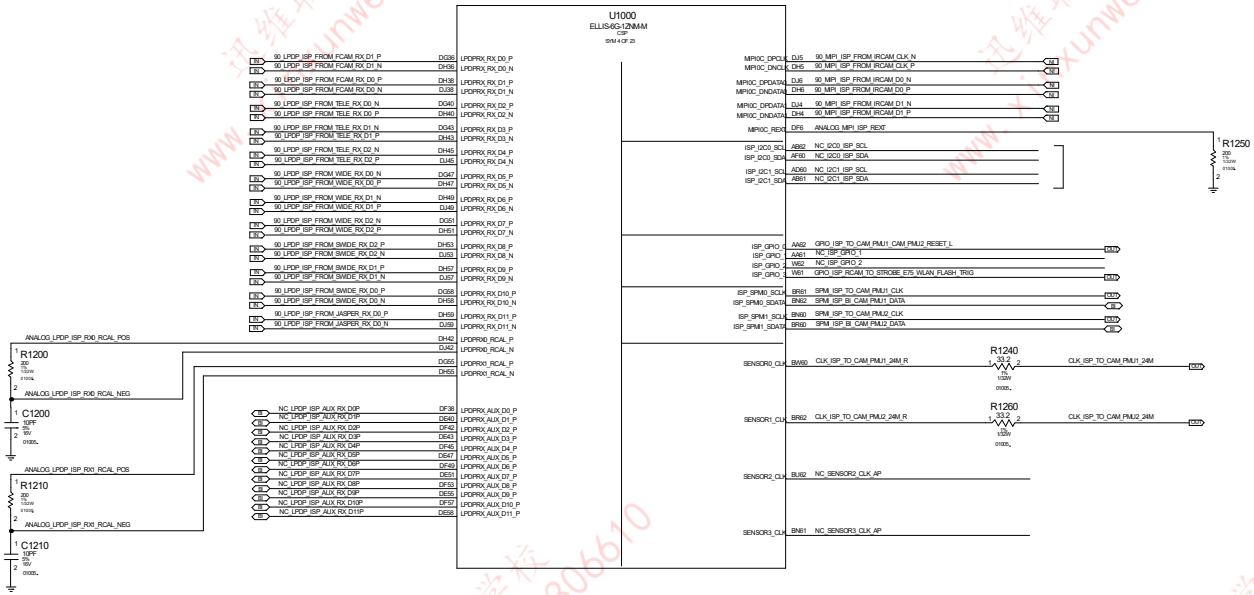

迅维职业技能培训学校 www.xinxunwei.com 18823306610

Number48

鑫智造图纸
XZZ drawing

SOC: DISPLAY

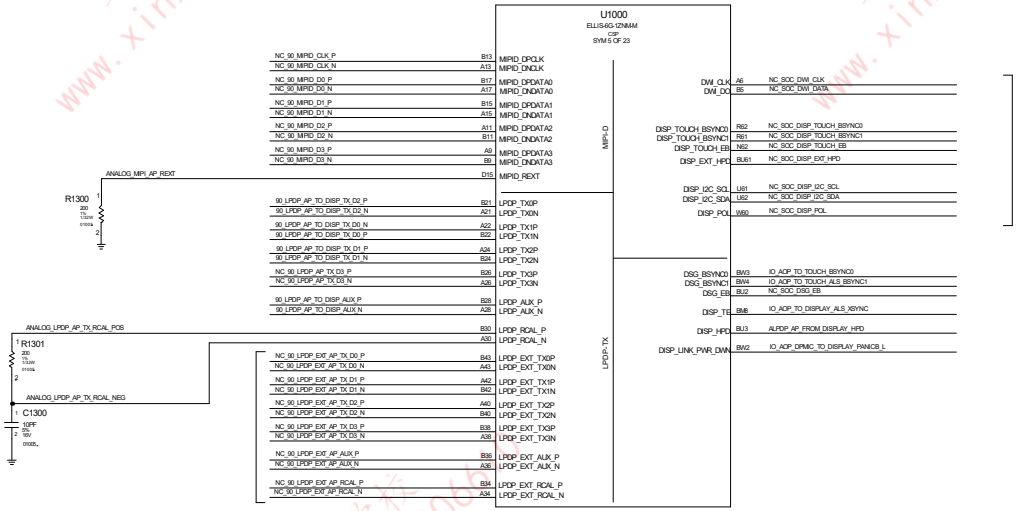

迅维职业技能培训学校
www.xinxunwei.com 18823306610

Number49

鑫智造图纸
XZZ drawing

SOC: AP Serial

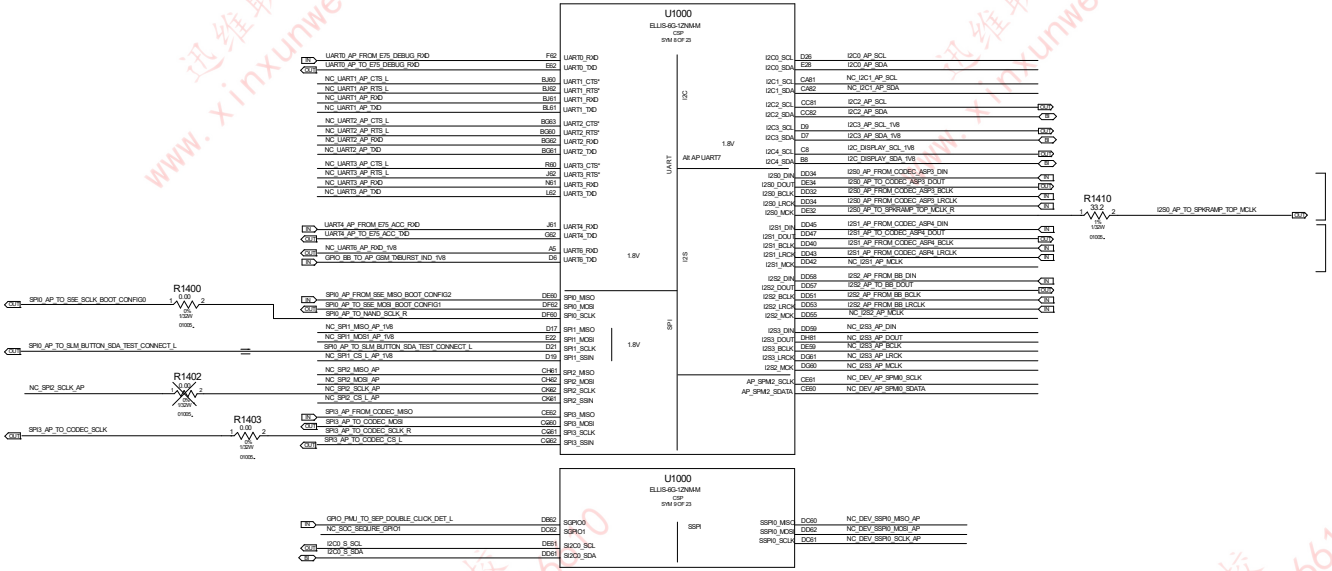

迅维职业技能培训学校 www.xinxunwei.com 18823306610

Number50

鑫智造图纸
XZZ drawing

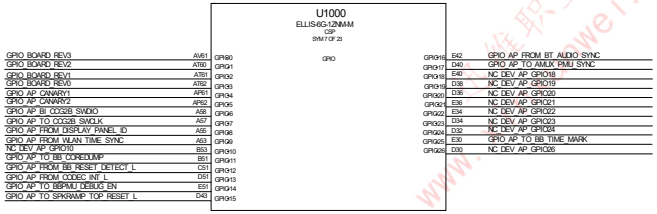

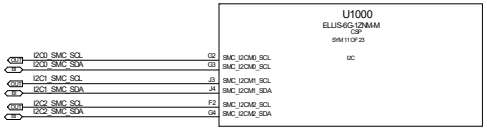

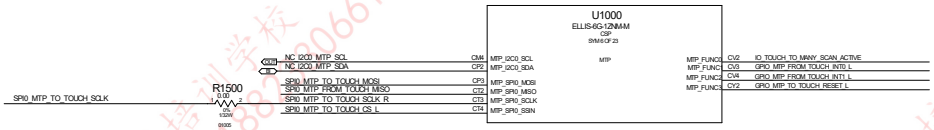

迅维职业技能培训学校
www.xinxunwei.com 18823306610

Number 51

鑫智造图纸
XZZ drawing

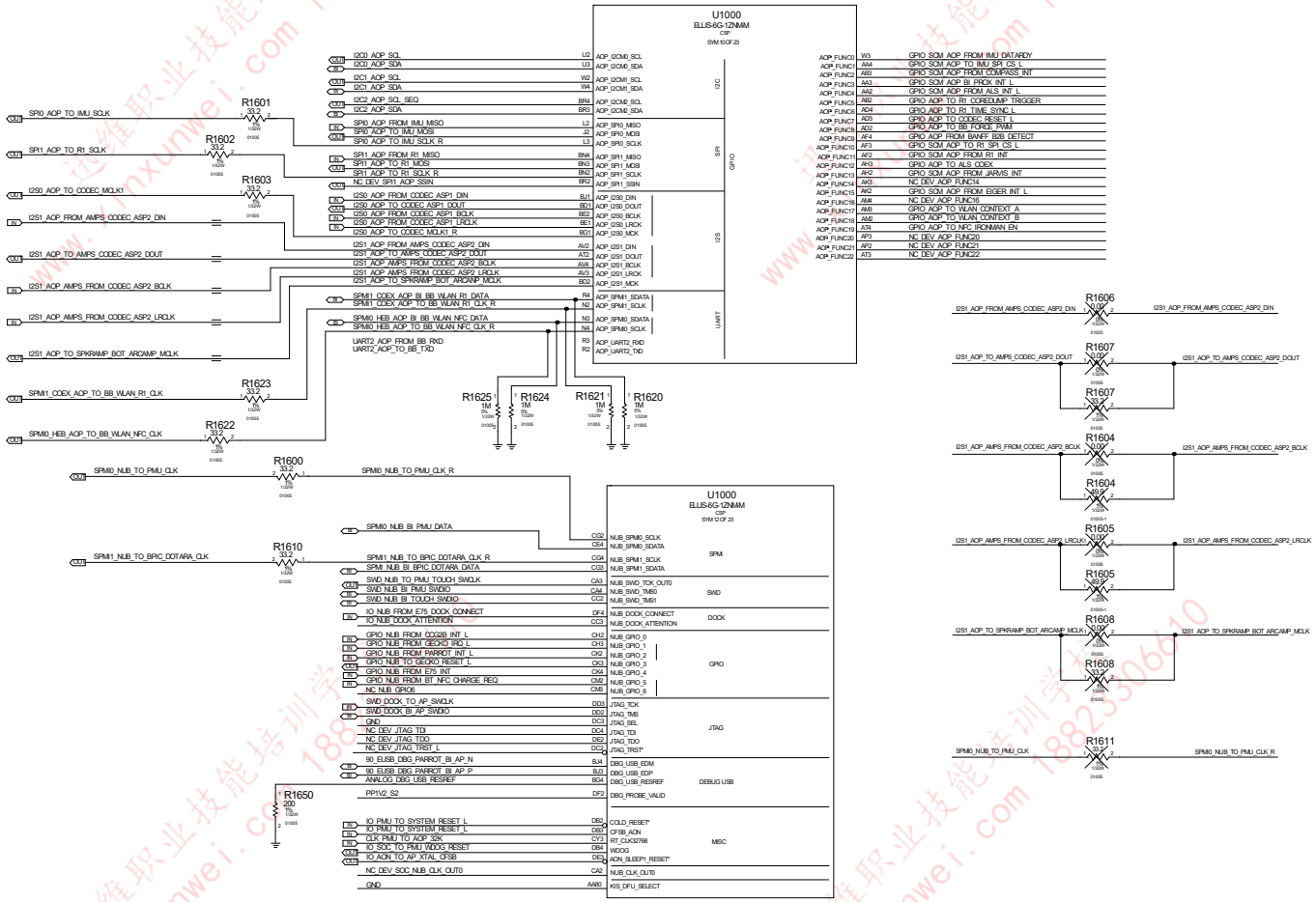

迅维职业技能培训学校 www.xinxunwei.com 18823306610

Number	52

鑫智造图纸
XZZ drawing

OCELOT

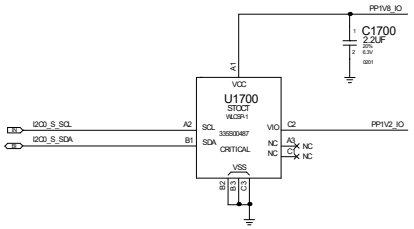

迅维职业技能培训学校
www.xinxunwei.com 18823306610

Number 53

鑫智造图纸
XZZ drawing

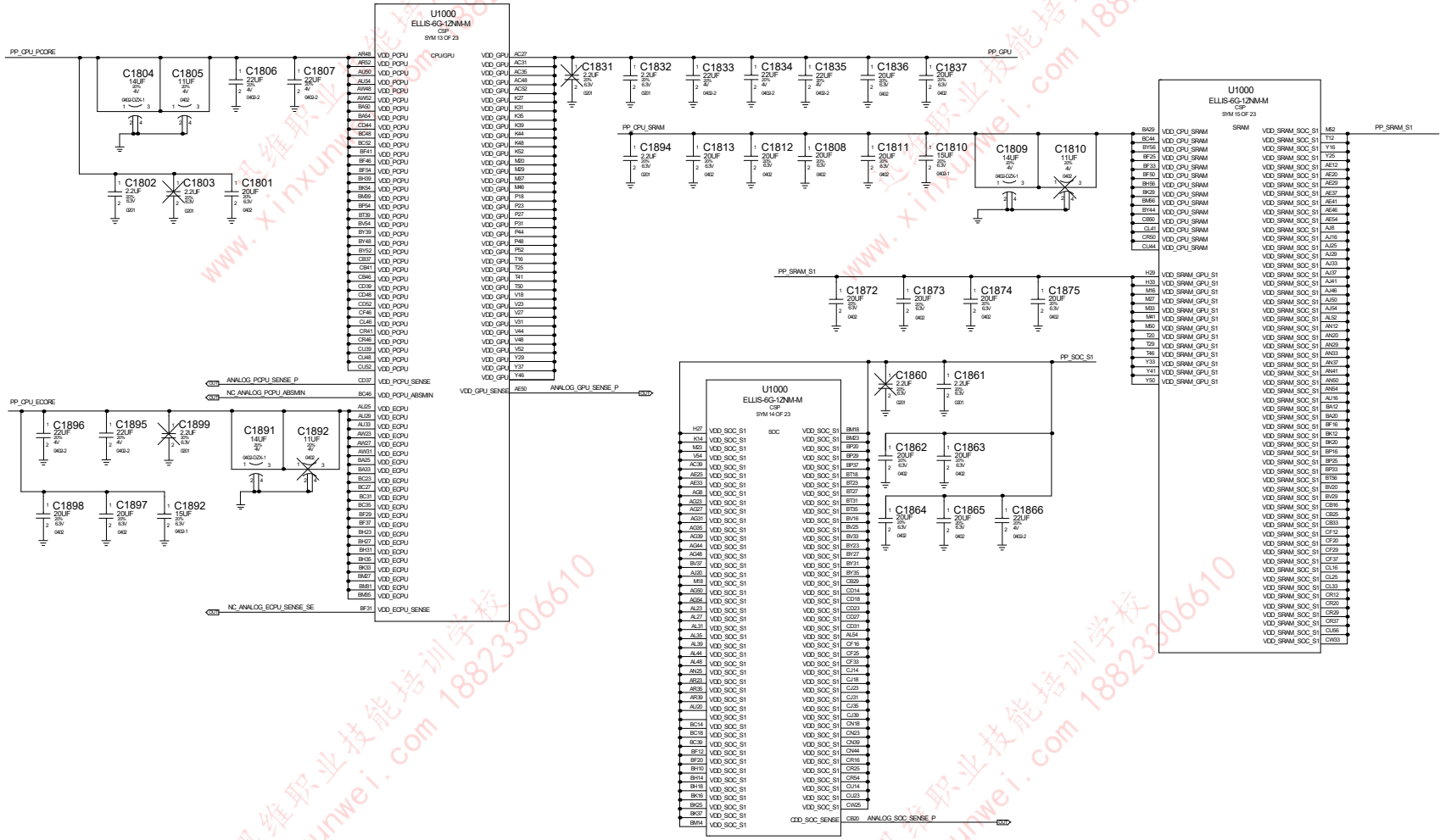

迅维职业技能培训学校 www.xinxunwei.com 18823306610

Number 54

鑫智造图纸
XZZ drawing

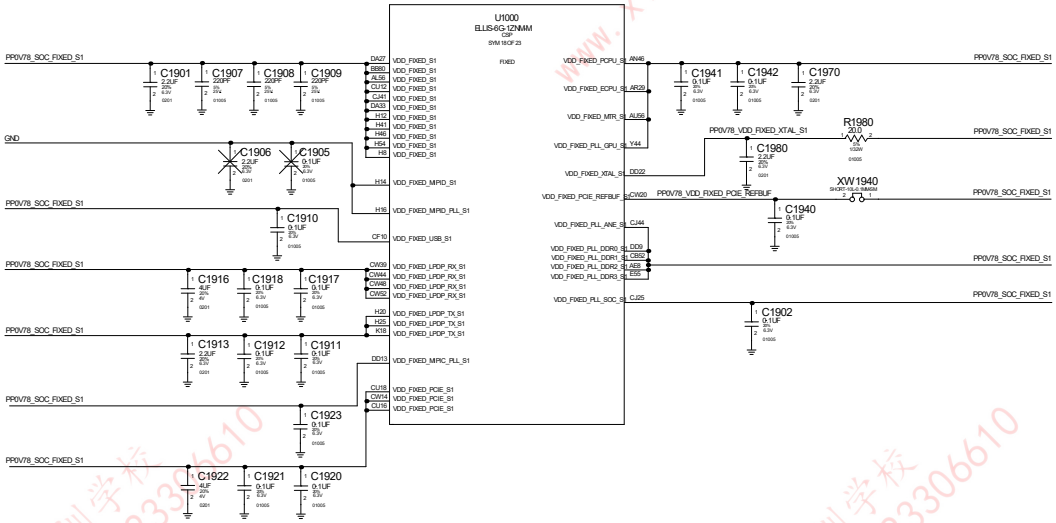

Number	55
鑫智造图纸 XZZ drawing	

迅维职业技能培训学校 www.xinxunwei.com 18823306610

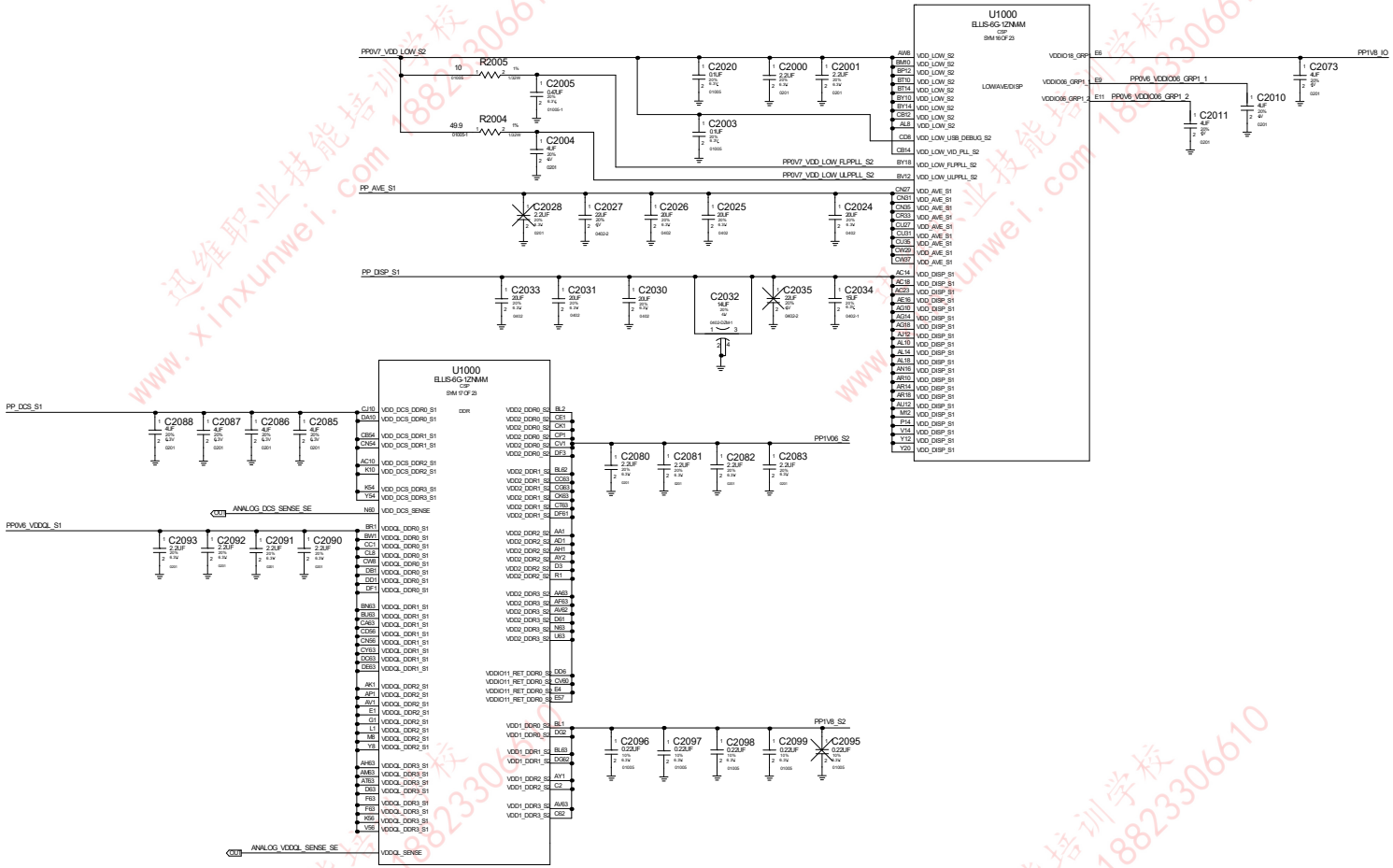

Number	56

鑫智造图纸
XZZ drawing

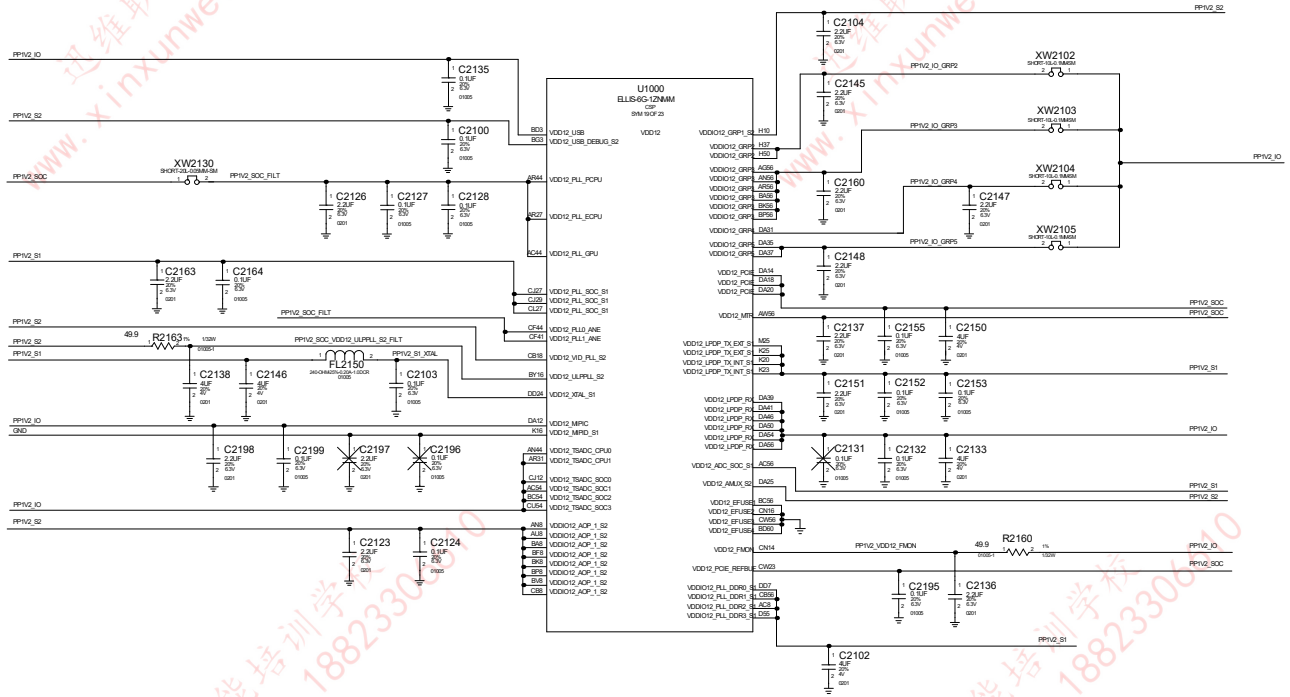

迅维职业技能培训学校
www.xinxunwei.com 18823306610

Number	57
鑫智造图纸 XZZ drawing	

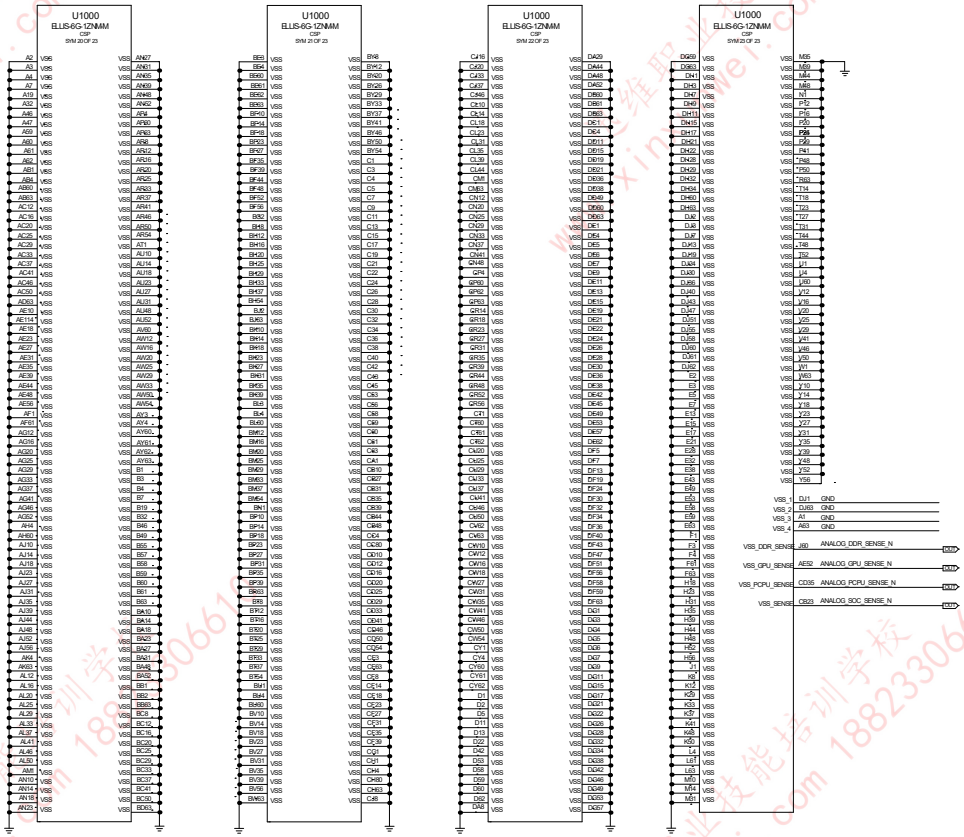

迅维职业技能培训学校 www.xinxunwei.com 18823306610

Number 58

鑫智造图纸
XZZ drawing

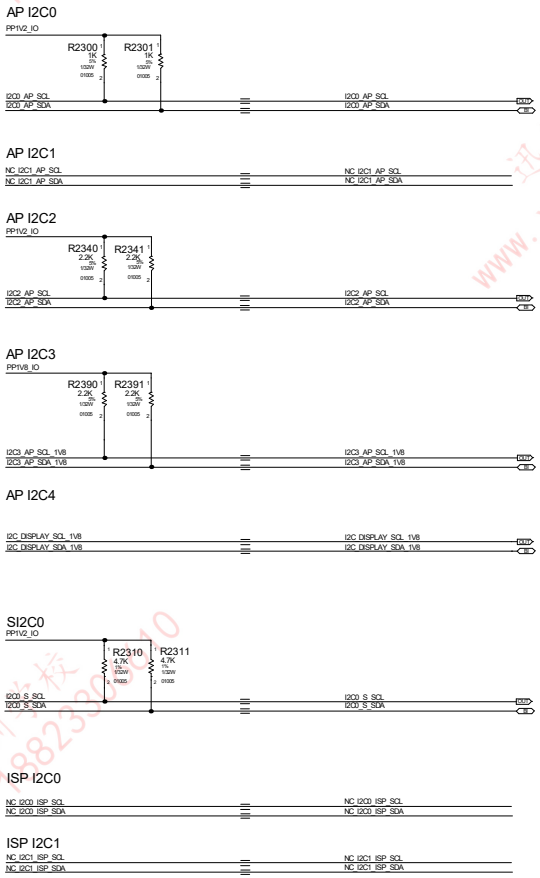

迅维职业技能培训学校
www.xinxunwei.com 18823306610

Number 59

鑫智造图纸
XZZ drawing

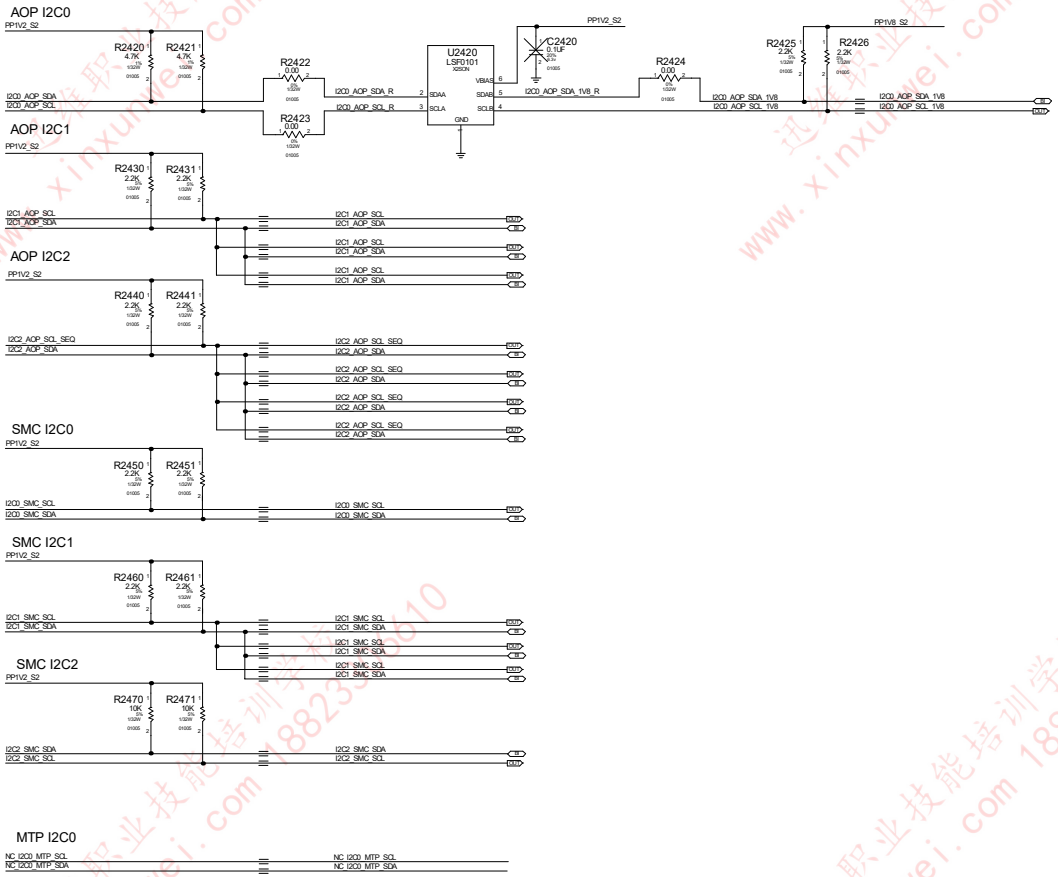

迅维职业技能培训学校 www.xinxunwei.com 18823306610

Number	60

鑫智造图纸
XZZ drawing

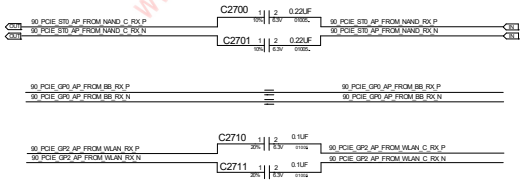

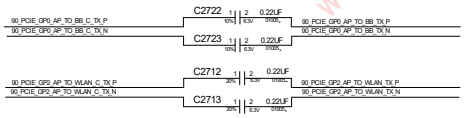

MIPI

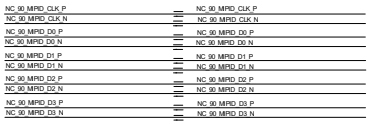

DISPLAY/TOUCH IO

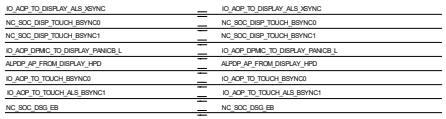

MISC

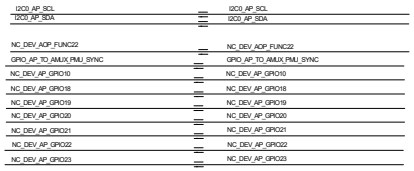

PCIe

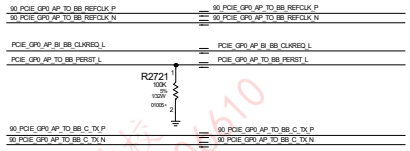

迅维职业技能培训学校
www.xinxunwei.com 18823306610

Number 61

鑫智造图纸
XZZ drawing

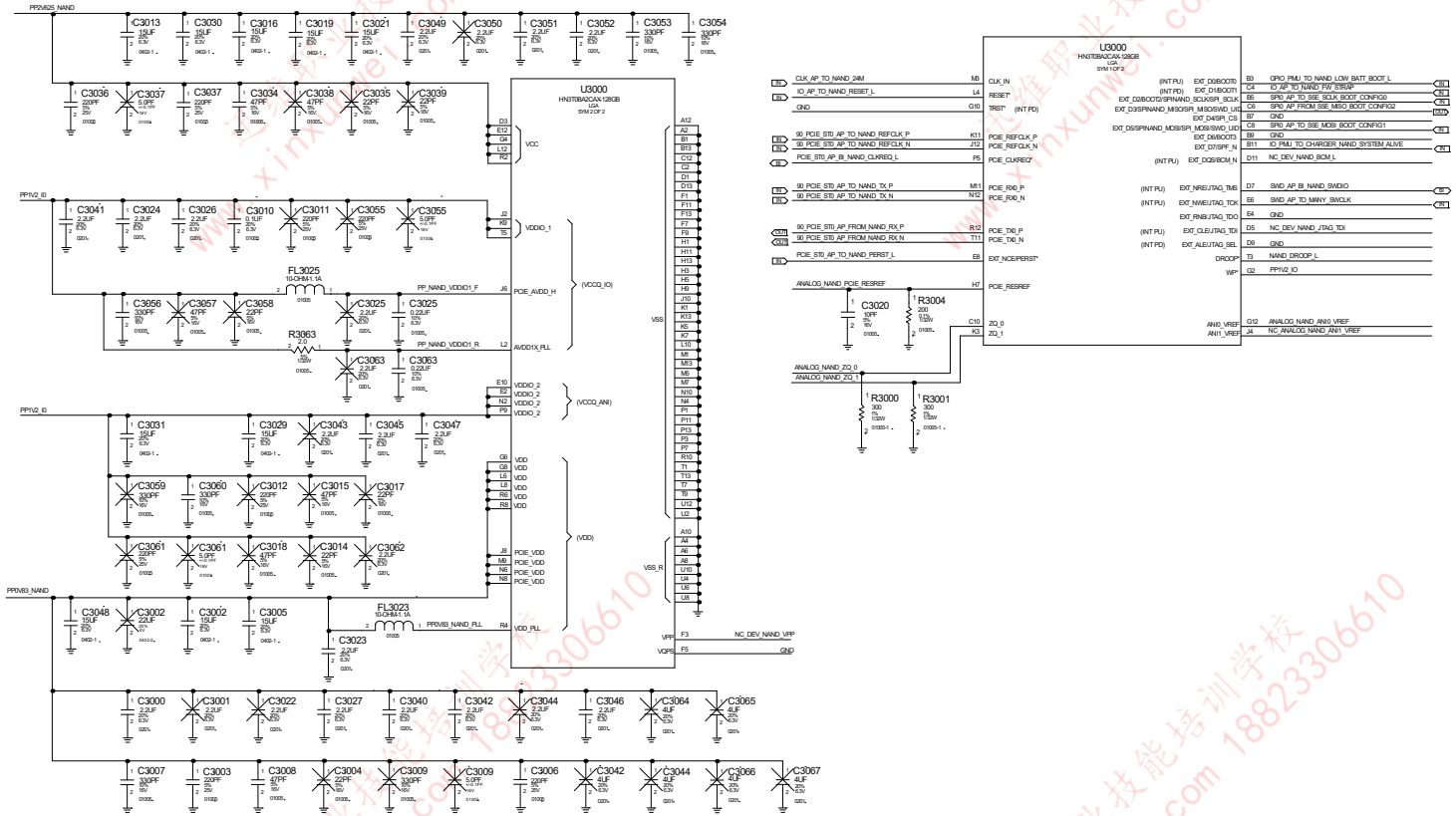

Number62

鑫智造图纸
XZZ drawing

迅维职业技能培训学校 www.xinxunwei.com 18823306610

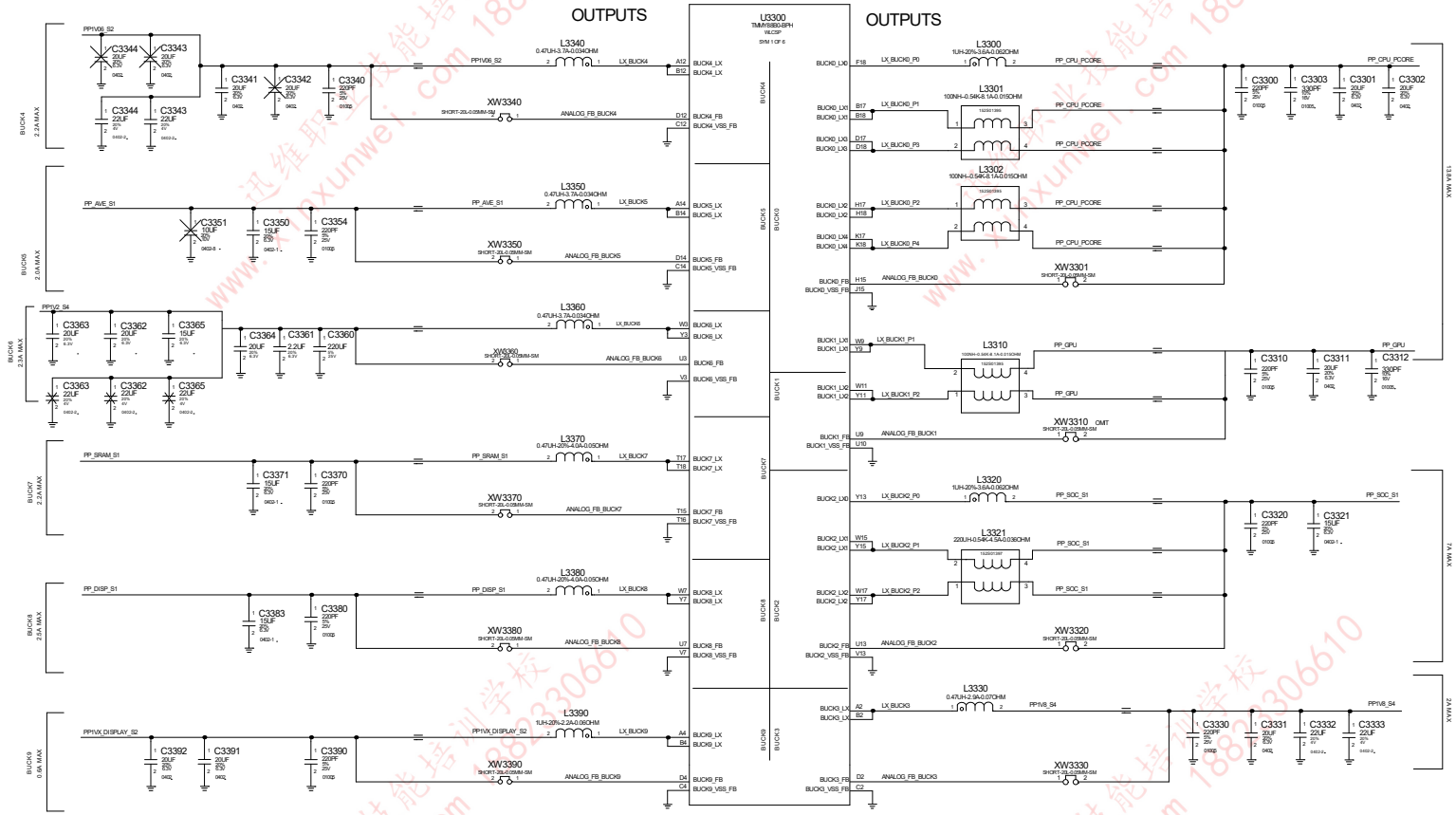

迅维职业技能培训学校 www.xinxunwei.com 18823306610

Number 63

鑫智造图纸
XZZ drawing

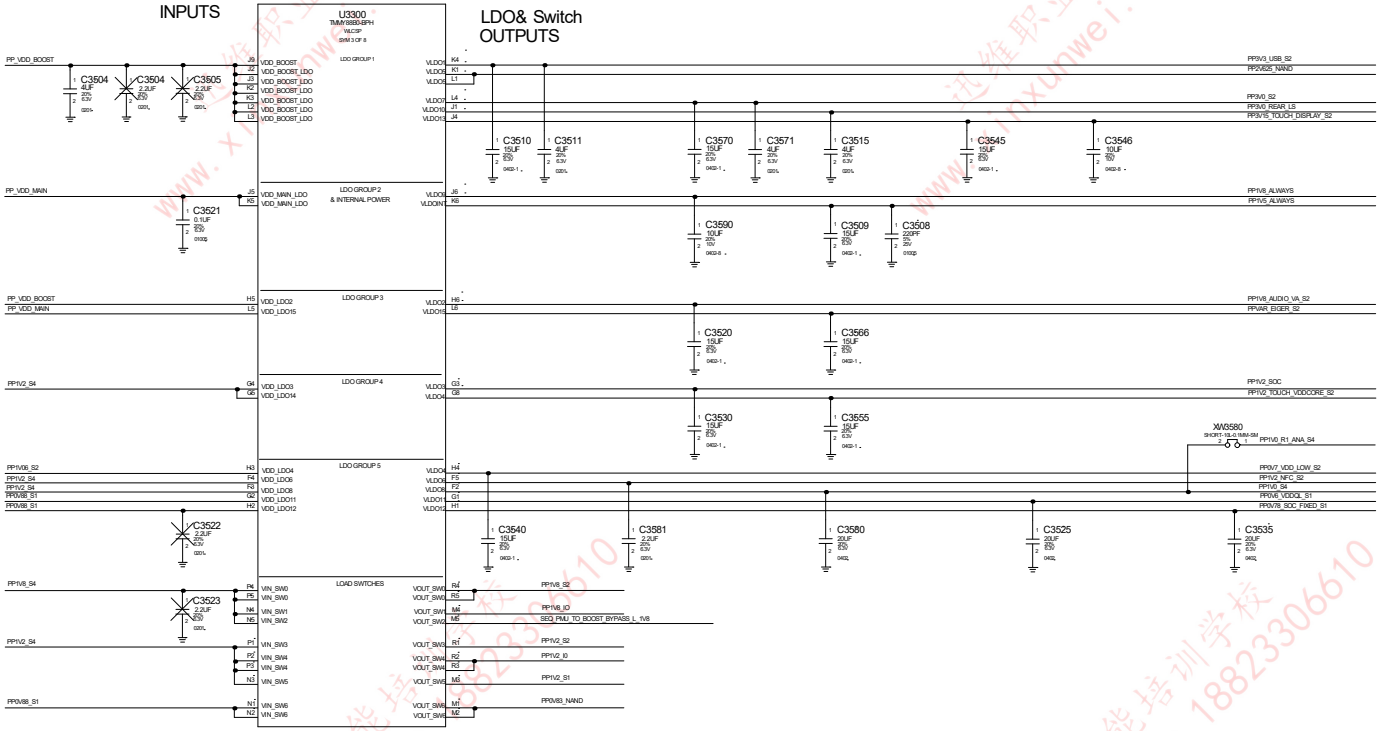

迅维职业技能培训学校
www.xinxunwei.com 18823306610

Number64

鑫智造图纸
XZZ drawing

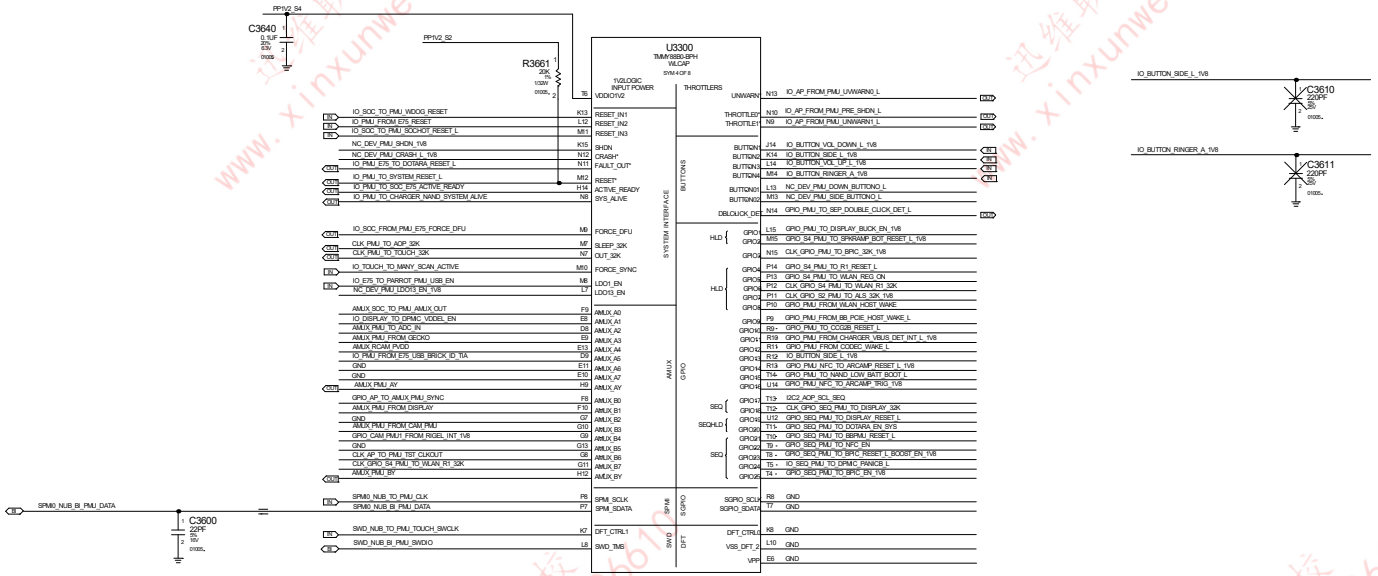

迅维职业技能培训学校 www.xinxunwei.com 18823306610

Number65

鑫智造图纸
XZZ drawing

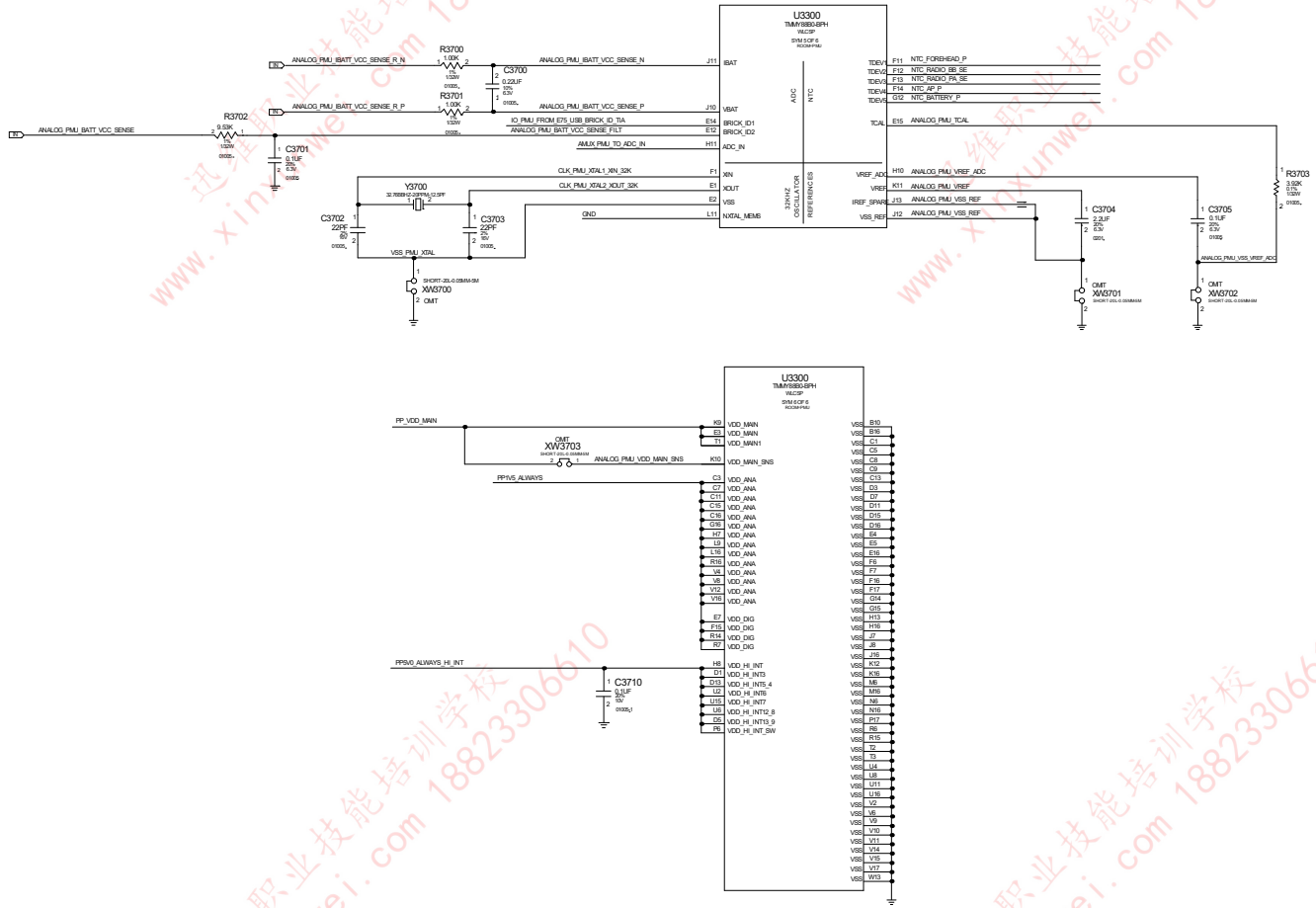

迅维职业技能培训学校
www.xinxunwei.com 18823306610

Number66

鑫智造图纸
XZZ drawing

HARGER

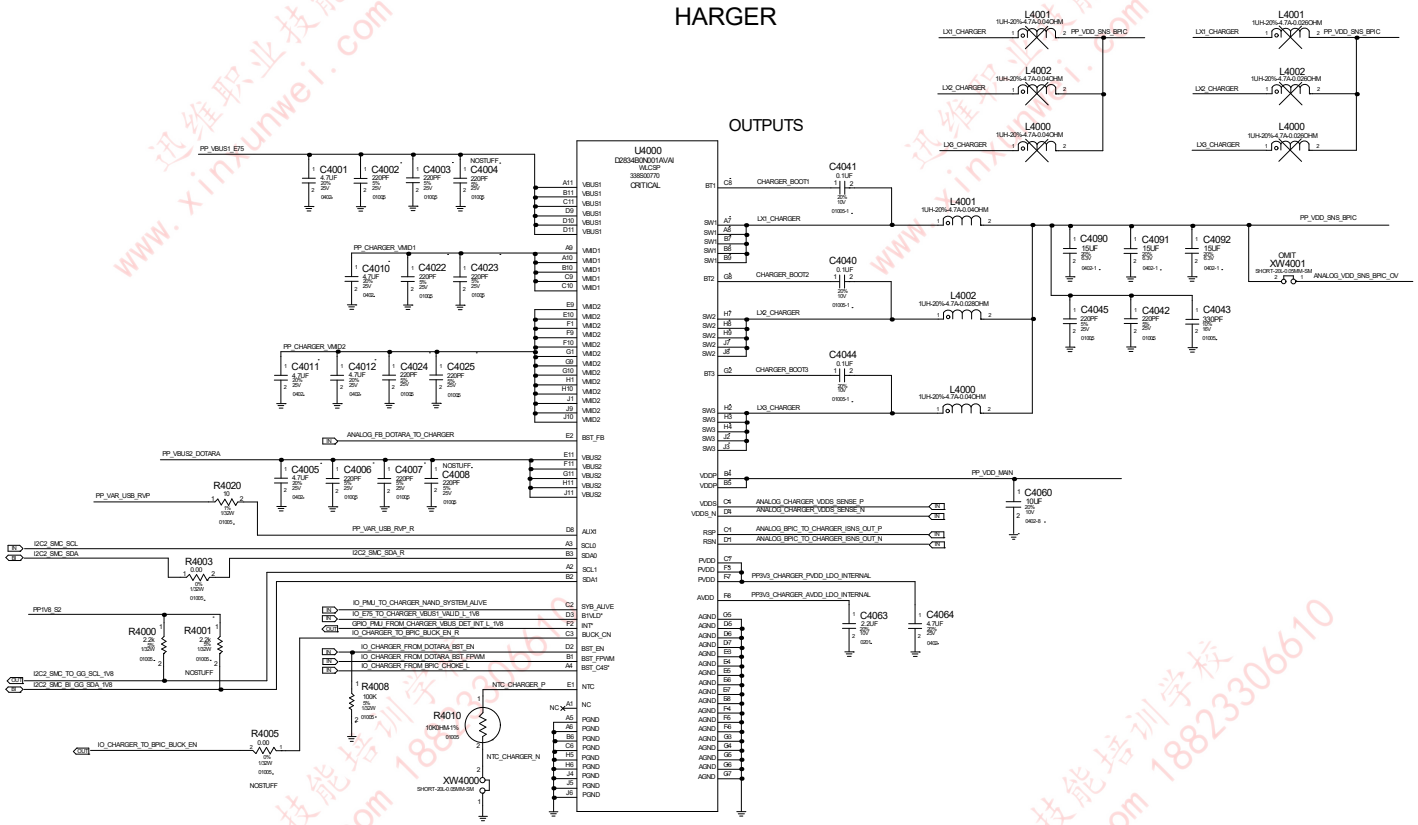

迅维职业技能培训学校 www.xinxunwei.com 18823306610

Number67

鑫智造图纸
XZZ drawing

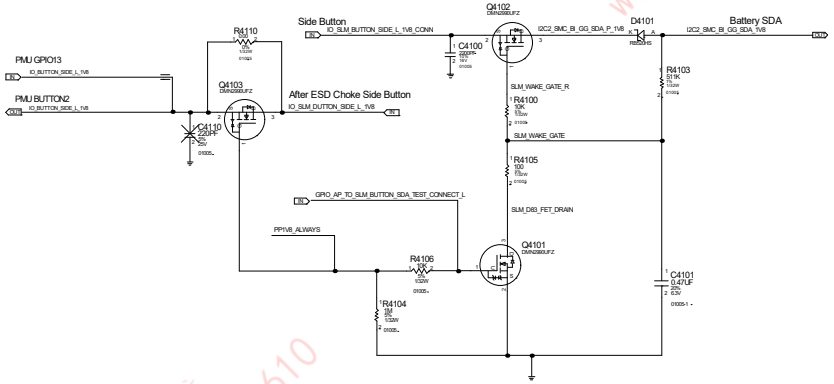

迅维职业技能培训学校
www.xinxunwei.com 18823306610

Number 68

鑫智造图纸
XZZ drawing

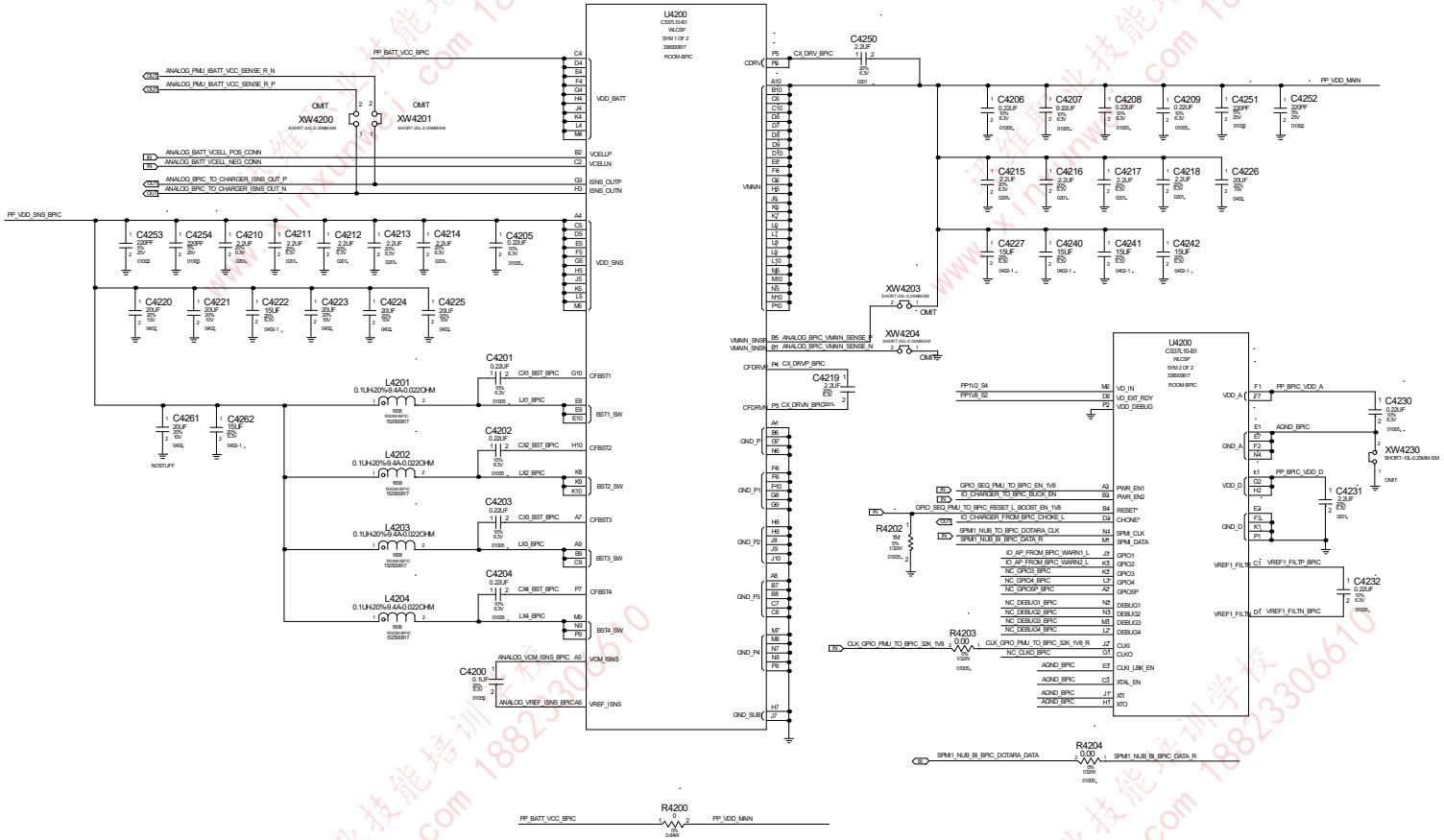

迅维职业技能培训学校 www.xinxunwei.com 18823306610

Number69

鑫智造图纸
XZZ drawing

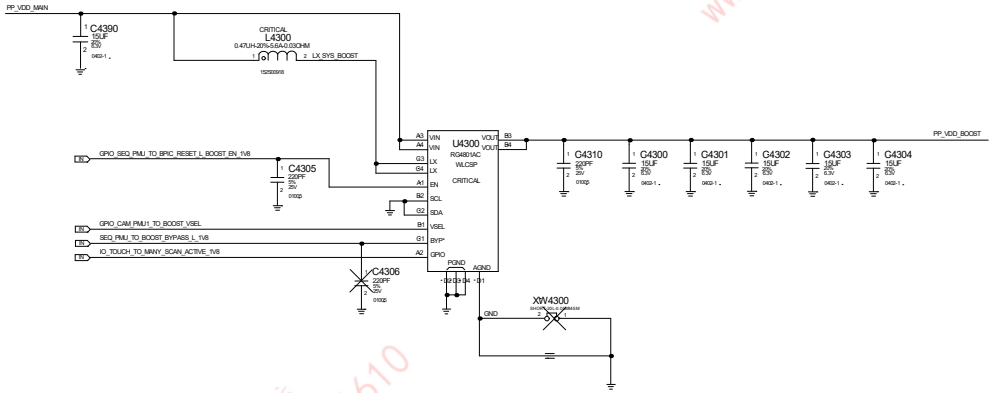

迅维职业技能培训学校
www.xinxunwei.com 18823306610

Number70

鑫智造图纸
XZZ drawing

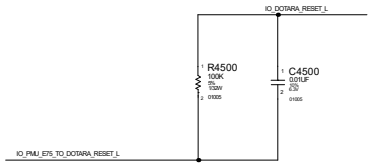

迅维职业技能培训学校
www.xinxunwei.com 18823306610

Number 71

鑫智造图纸
XZZ drawing

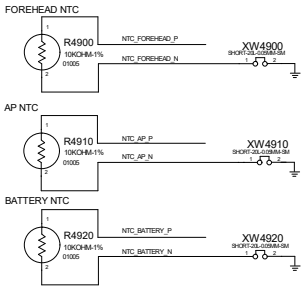

迅维职业技能培训学校
www.xinxunwei.com 18823306610

Number 72

鑫智造图纸
XZZ drawing

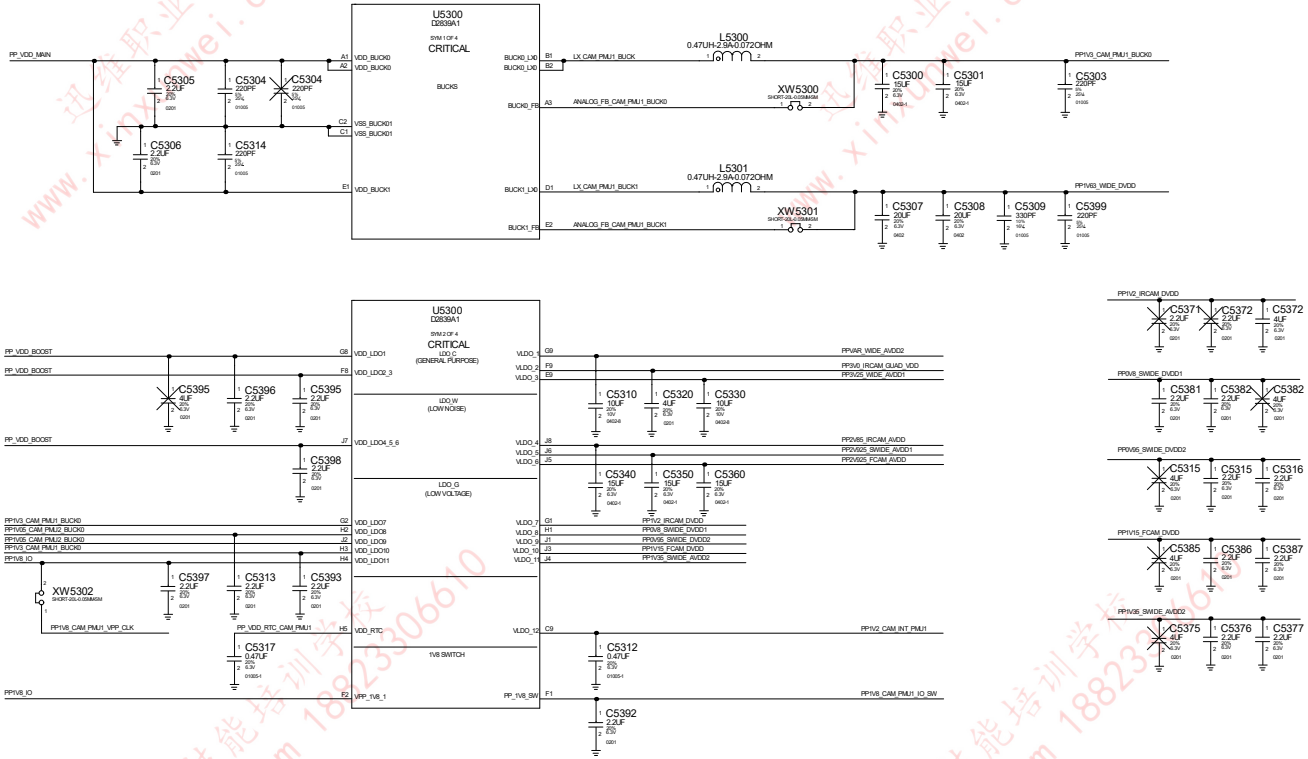

迅维职业技能培训学校 www.xinxunwei.com 18823306610

Number 73

鑫智造图纸
XZZ drawing

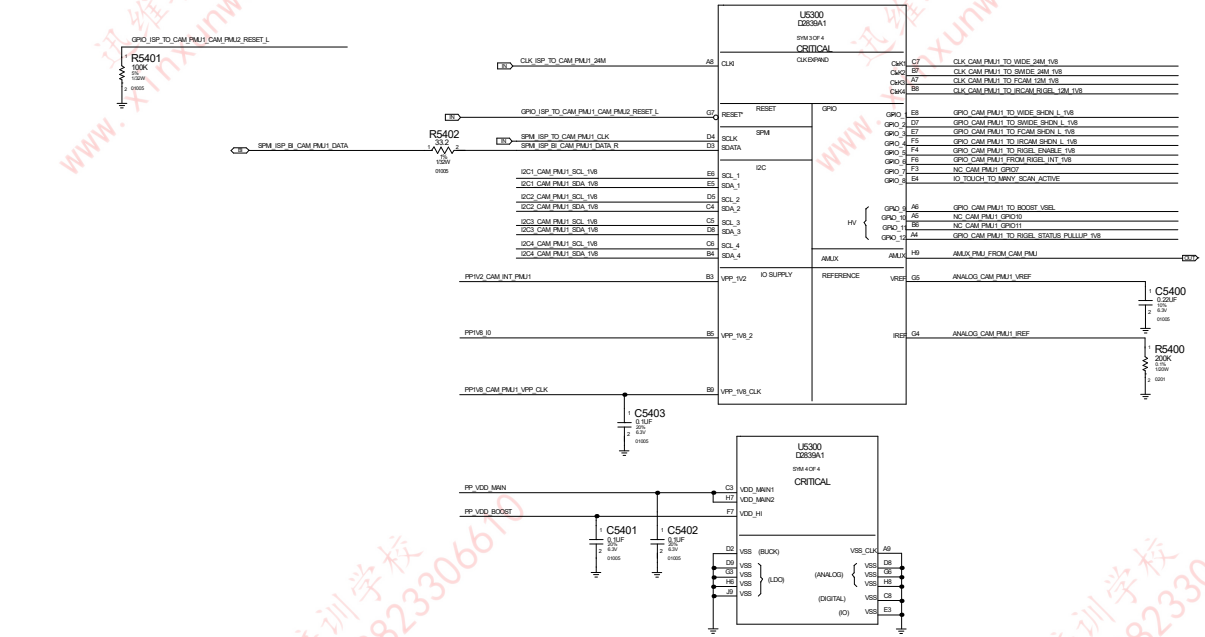

迅维职业技能培训学校
www.xinxunwei.com 18823306610

Number 74

鑫智造图纸
XZZ drawing

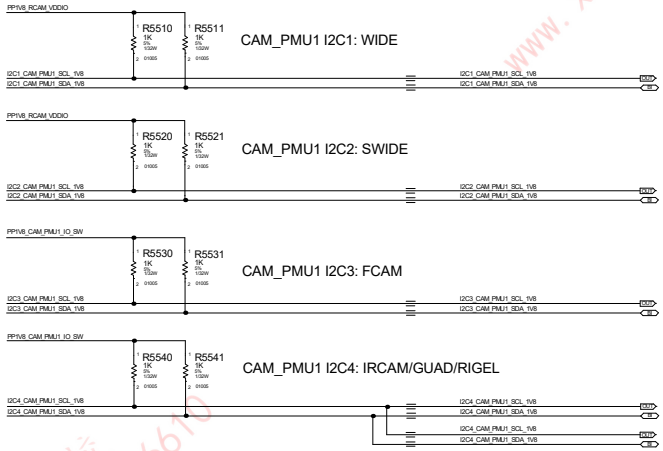

迅维职业技能培训学校
www.xinxunwei.com 18823306610

Number	75
鑫智造图纸 XZZ drawing	

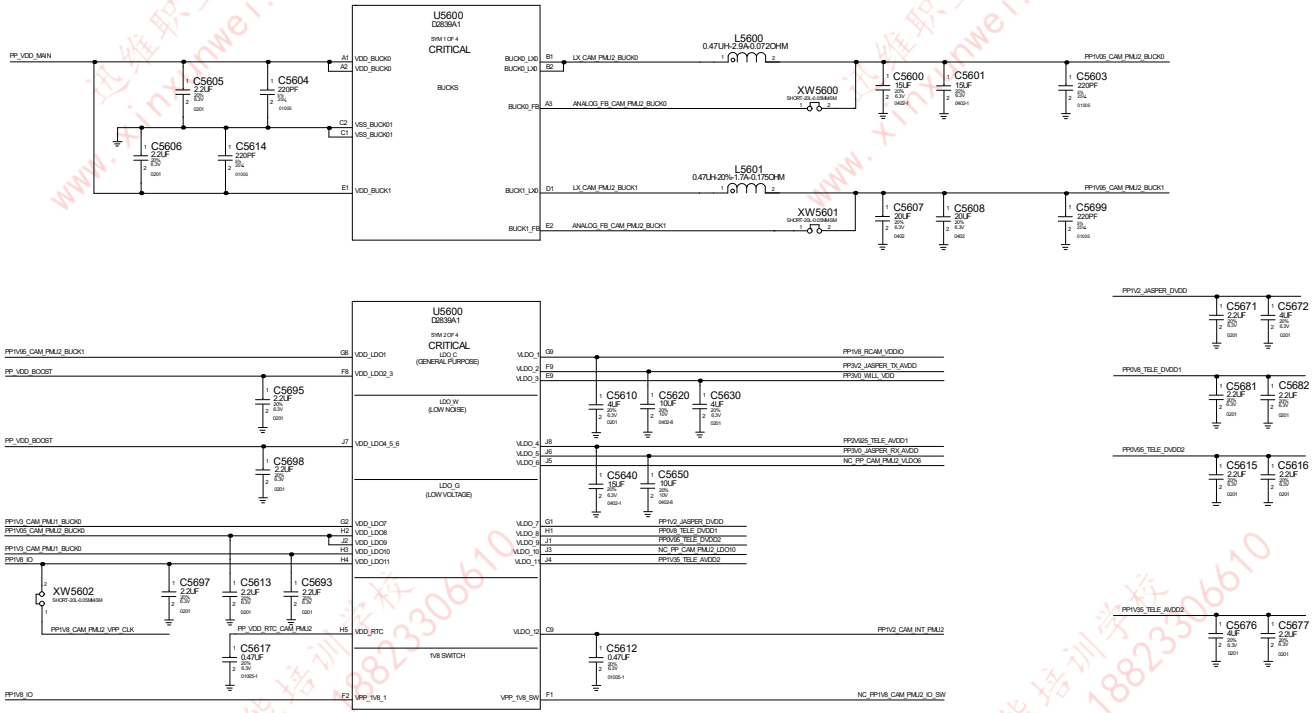

迅维职业技能培训学校 www.xinxunwei.com 18823306610

Number 76

鑫智造图纸
XZZ drawing

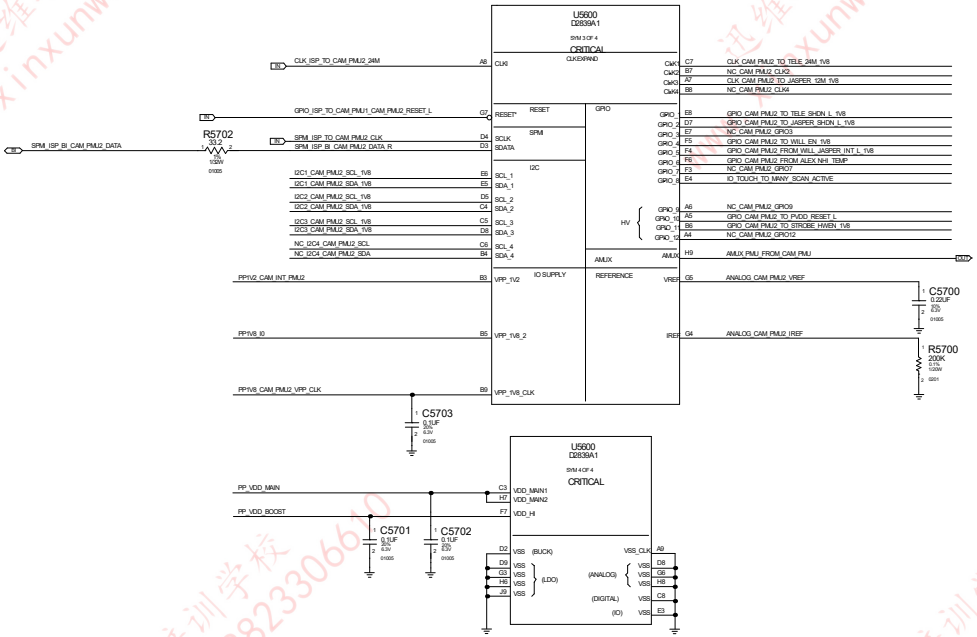

Number	77
鑫智造图纸 XZZ drawing	

迅维职业技能培训学校 www.xinxunwei.com 18823306610

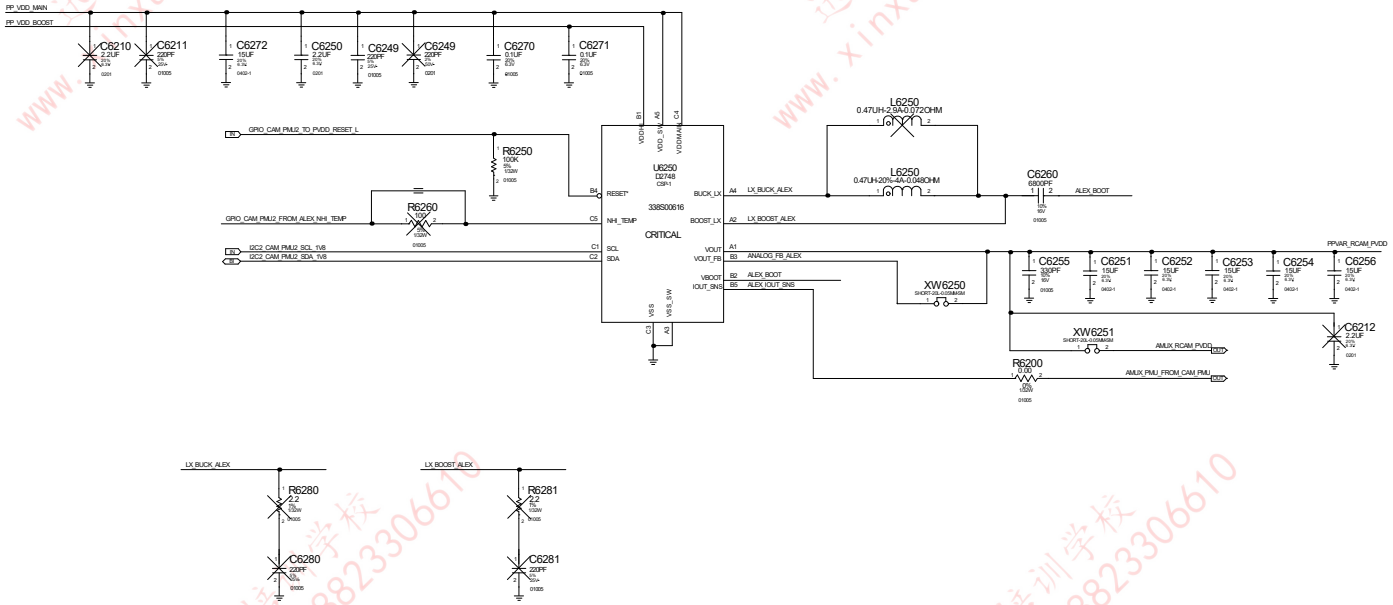

Number	78
鑫智造图纸 XZZ drawing	

迅维职业技能培训学校 www.xinxunwei.com 18823306610

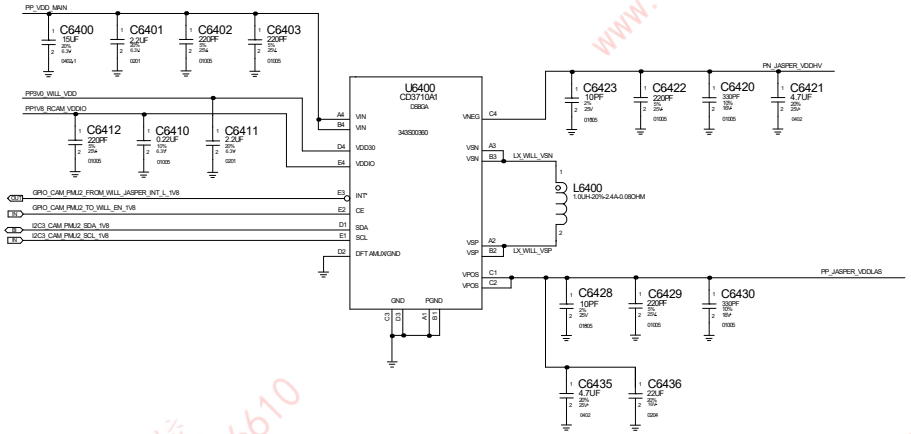

迅维职业技能培训学校
www.xinxunwei.com 18823306610

Number	79
鑫智造图纸 XZZ drawing	

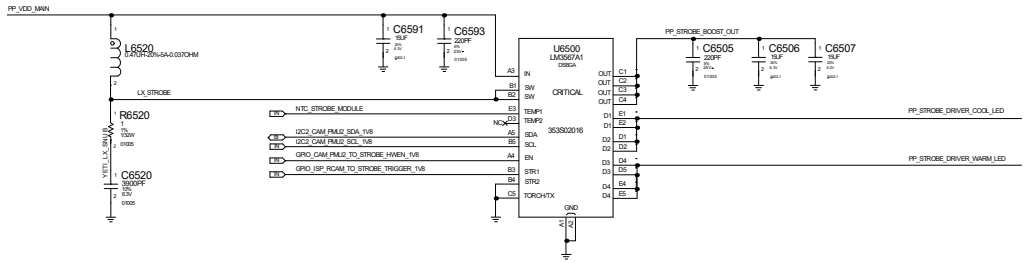

Number	80
鑫智造图纸 XZZ drawing	

迅维职业技能培训学校 www.xinxunwei.com 18823306610

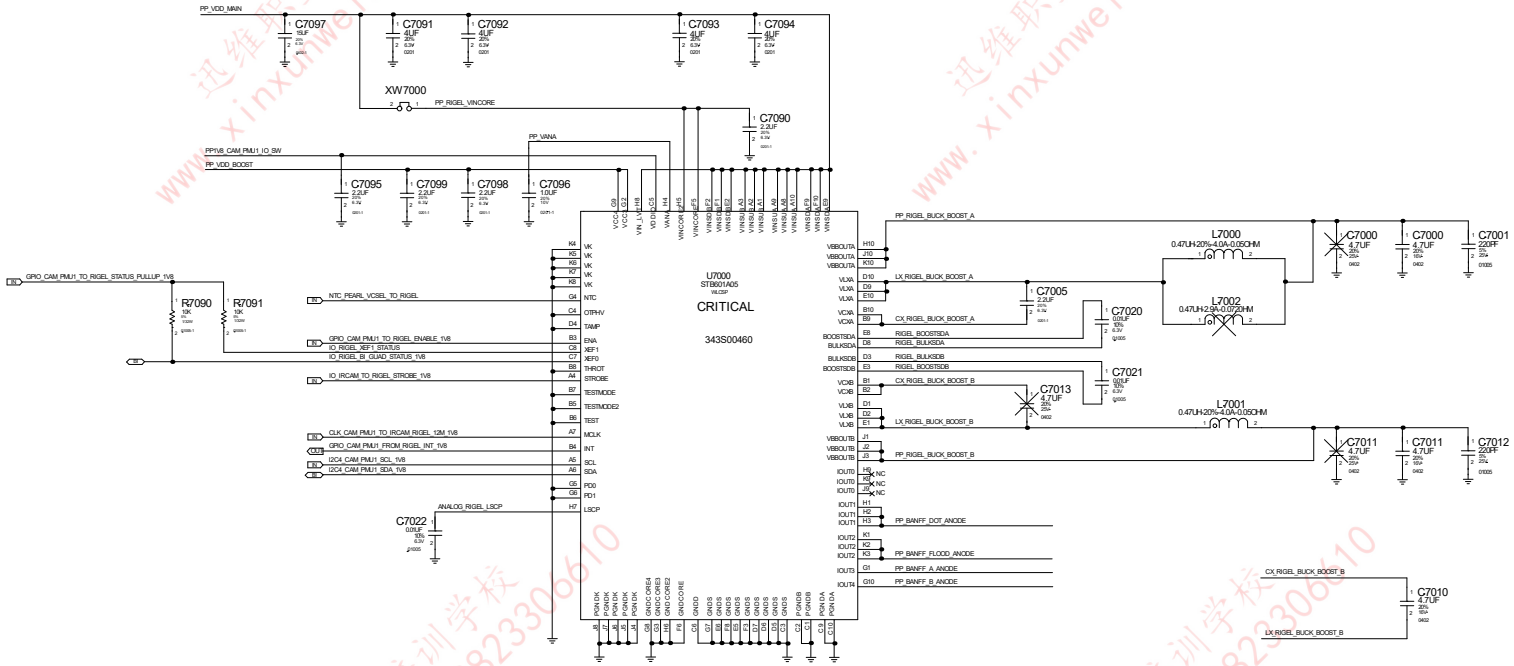

迅维职业技能培训学校 www.xinxunwei.com 18823306610

Number 81

鑫智造图纸
XZZ drawing

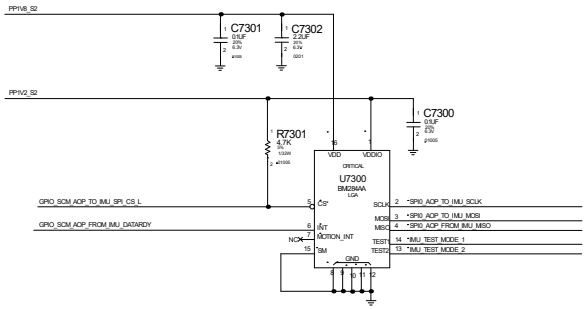

迅维职业技能培训学校
www.xinxunwei.com 18823306610

Number 82

鑫智造图纸
XZZ drawing

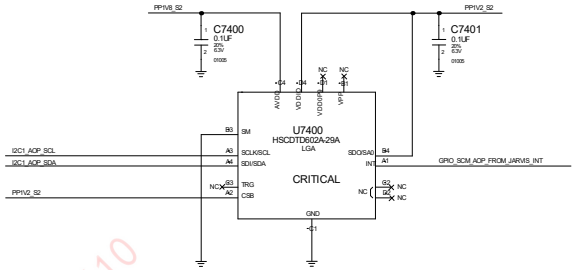

迅维职业技能培训学校
www.xinxunwei.com 18823306610

Number	83
鑫智造图纸 XZZ drawing	

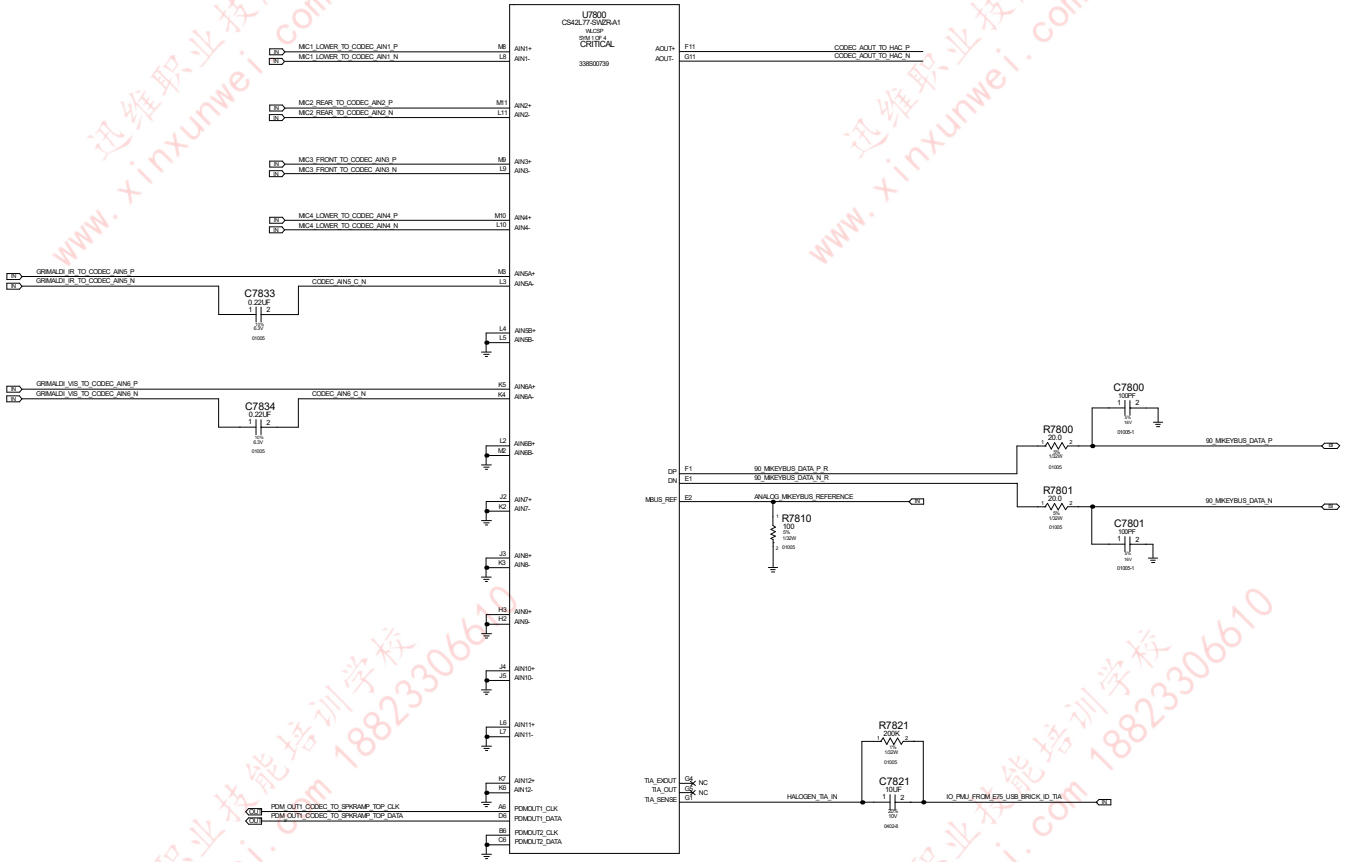

Number	84

鑫智造图纸
XZZ drawing

迅维职业技能培训学校 www.xinxunwei.com 18823306610

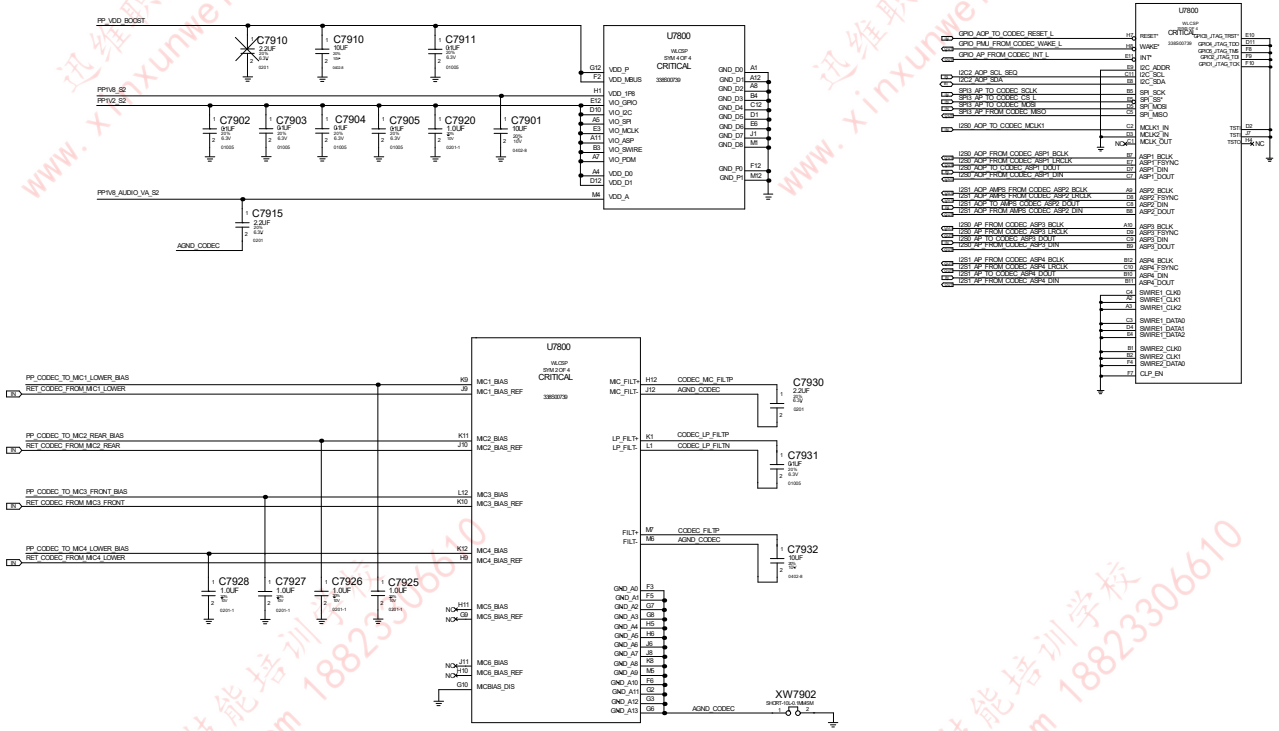

迅维职业技能培训学校
www.xinxunwei.com 18823306610

Number 85

鑫智造图纸
XZZ drawing

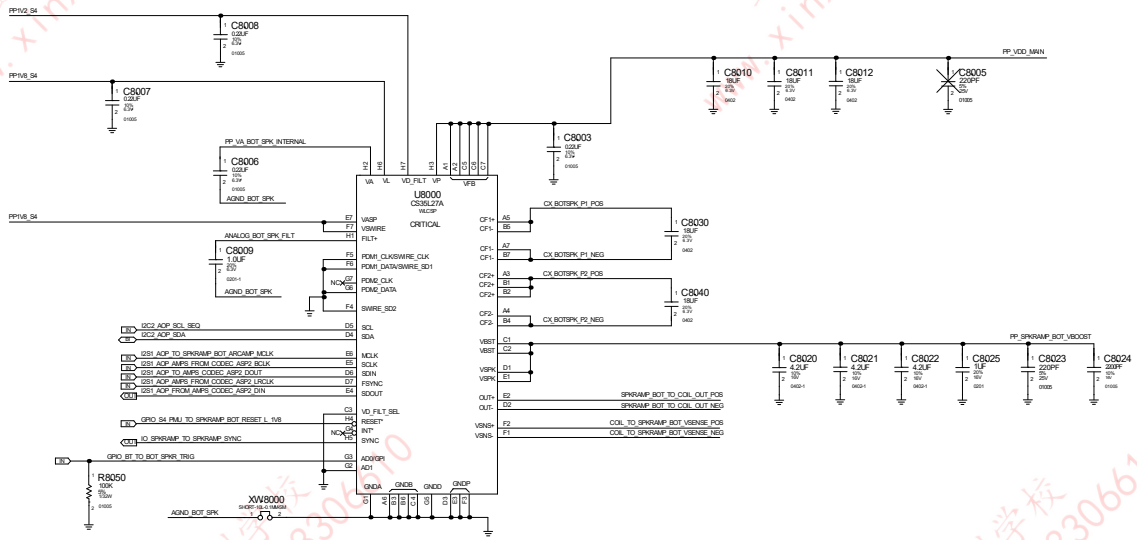

迅维职业技能培训学校
www.xinxunwei.com 18823306610

Number 86

鑫智造图纸
XZZ drawing

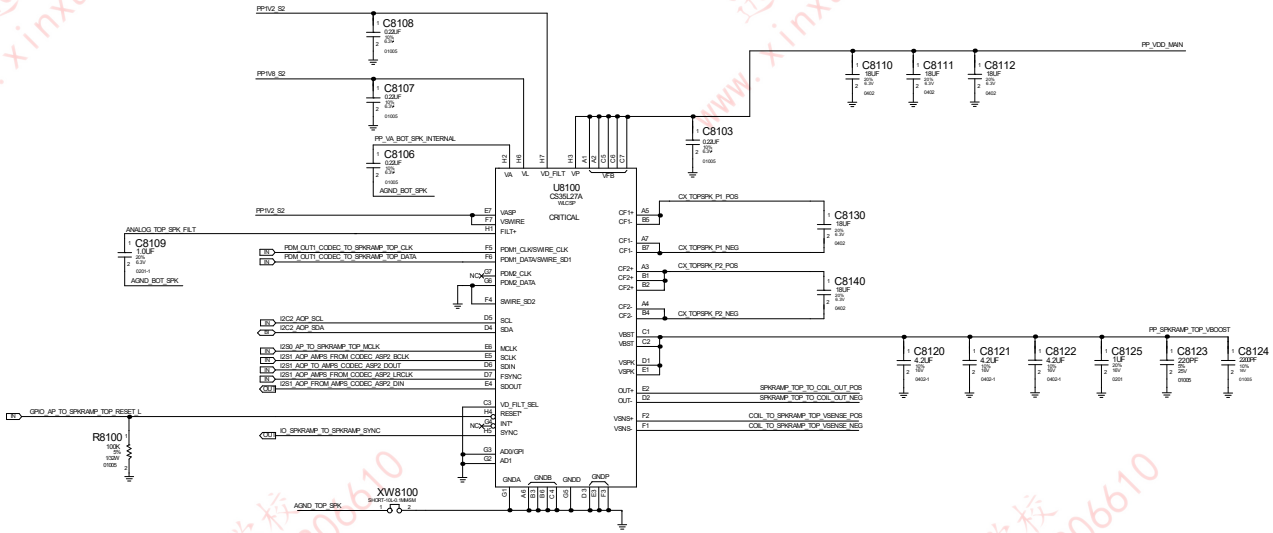

迅维职业技能培训学校
www.xinxunwei.com 18823306610

Number 87

鑫智造图纸
XZZ drawing

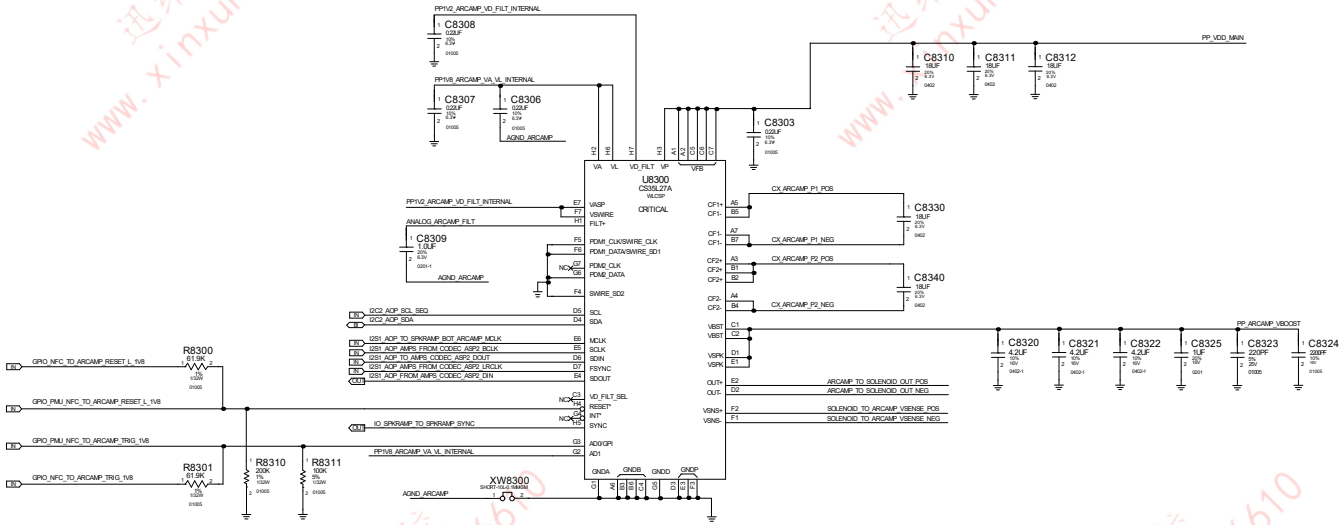

迅维职业技能培训学校
www.xinxunwei.com 18823306610

Number 88

鑫智造图纸
XZZ drawing

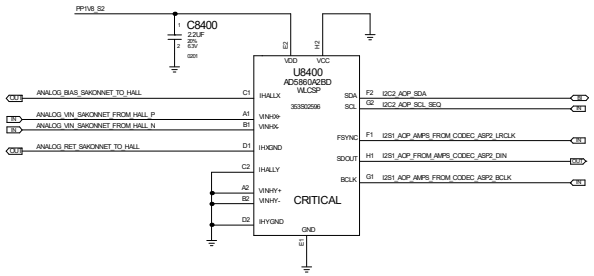

Number 89

鑫智造图纸
XZZ drawing

迅维职业技能培训学校
www.xinxunwei.com 18823306610

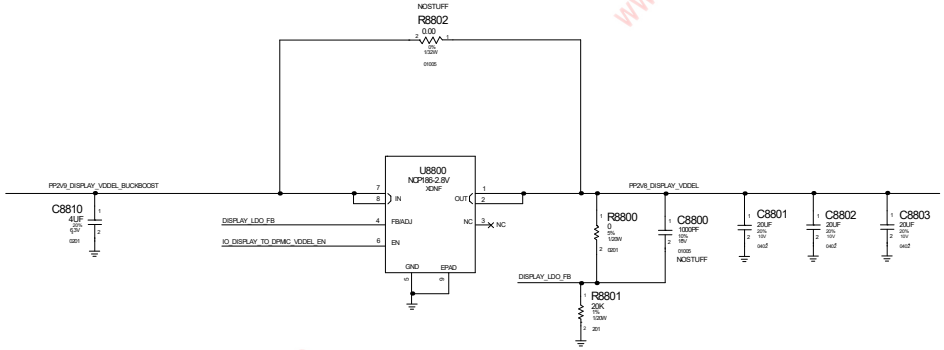

迅维职业技能培训学校
www.xinxunwei.com 18823306610

Number 90

鑫智造图纸
XZZ drawing

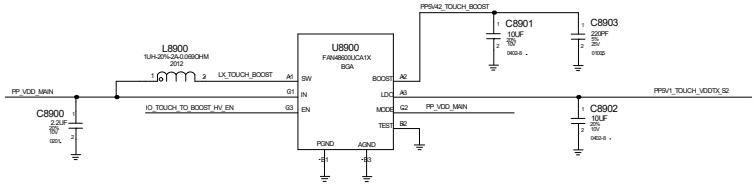

迅维职业技能培训学校
www.xinxunwei.com 18823306610

Number91

鑫智造图纸
XZZ drawing

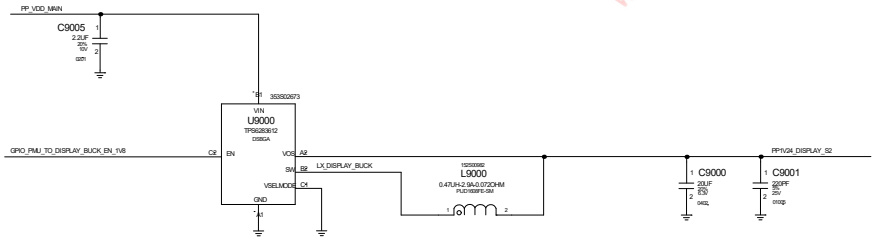

迅维职业技能培训学校
www.xinxunwei.com 18823306610

Number92

鑫智造图纸
XZZ drawing

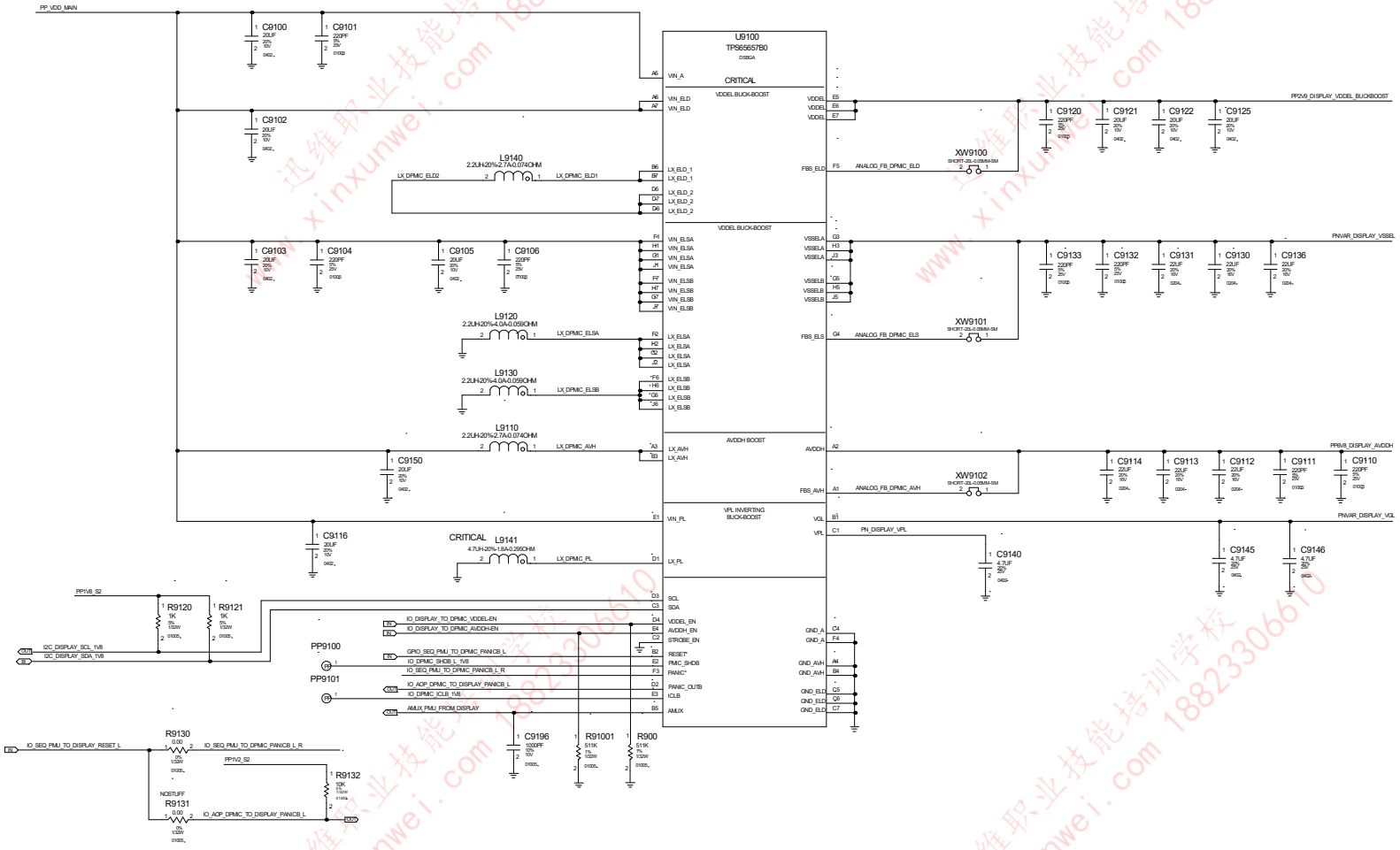

迅维职业技能培训学校 www.xinxunwei.com 18823306610

Number 93

鑫智造图纸
XZZ drawing

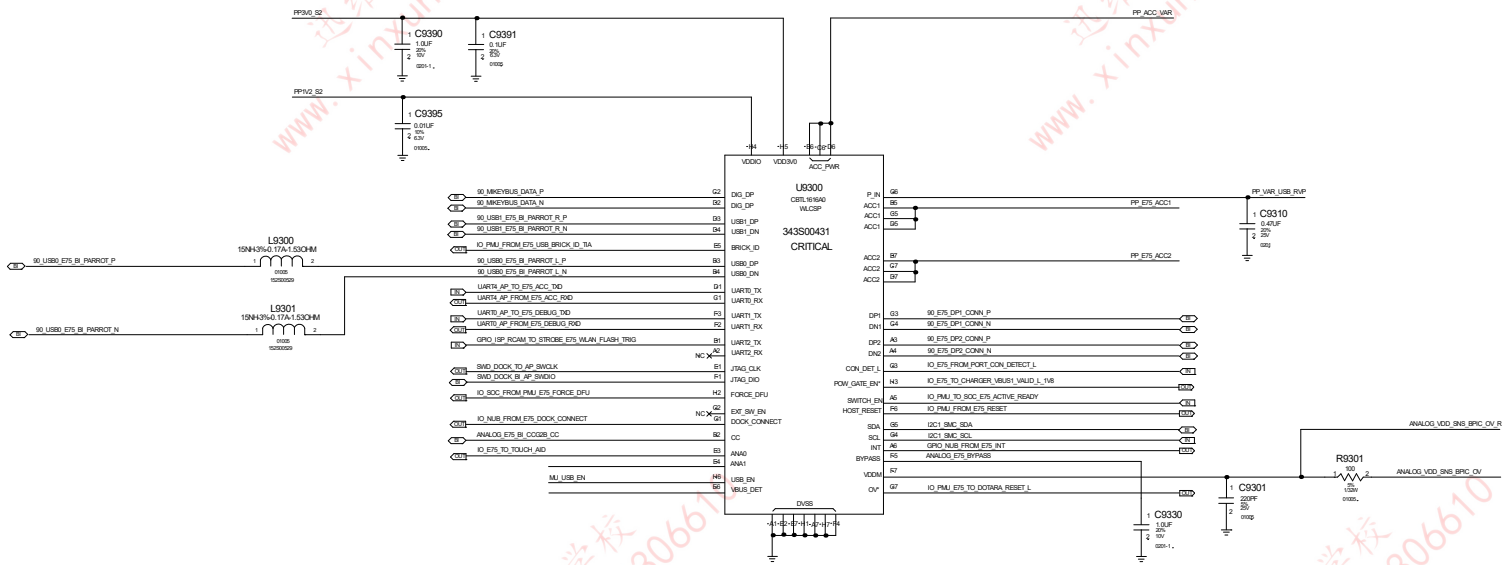

迅维职业技能培训学校
www.xinxunwei.com 18823306610

Number94

鑫智造图纸
XZZ drawing

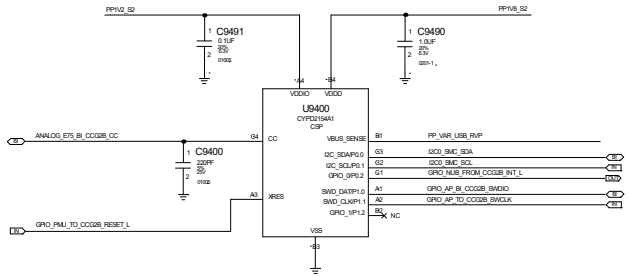

迅维职业技能培训学校
www.xinxunwei.com 18823306610

Number 95

鑫智造图纸
XZZ drawing

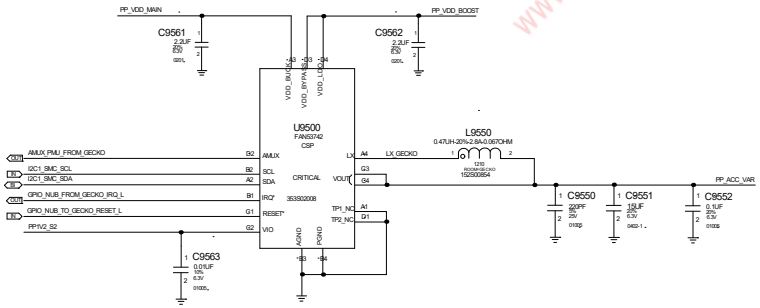

迅维职业技能培训学校
www.xinxunwei.com 18823306610

Number 96

鑫智造图纸
XZZ drawing

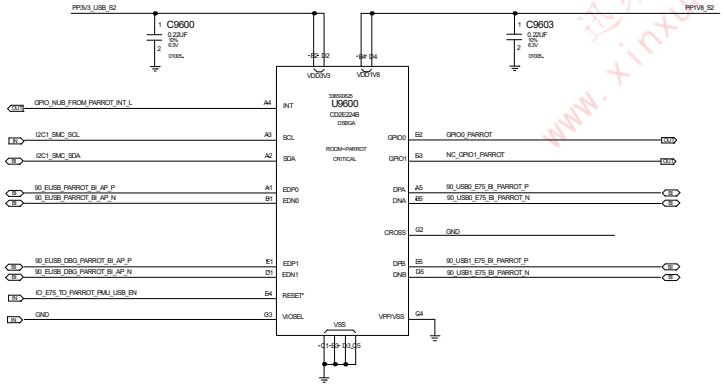

PLACE PARROT NEAR SOC

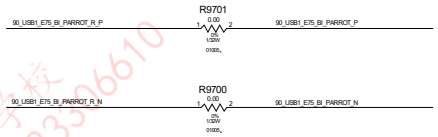

迅维职业技能培训学校
www.xinxunwei.com 18823306610

Number 97

鑫智造图纸
XZZ drawing

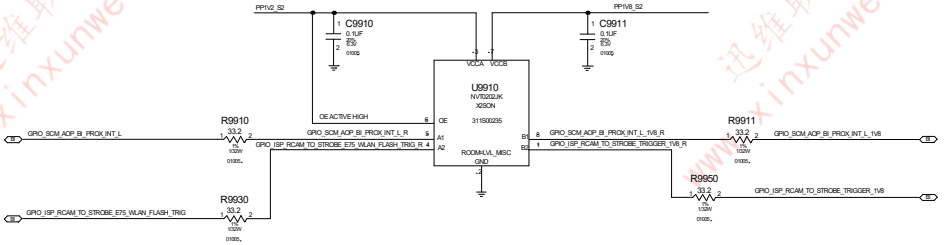

UCH SCAN ACTTVE +

COMPASS INTERRUPT

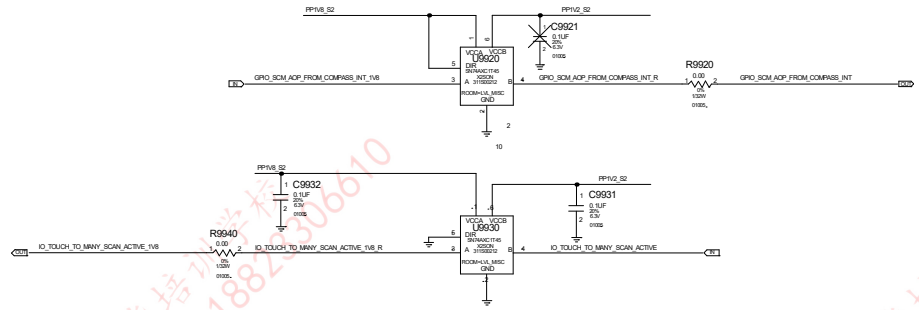

迅维职业技能培训学校
www.xinxunwei.com 18823306610

Number98

鑫智造图纸
XZZ drawing

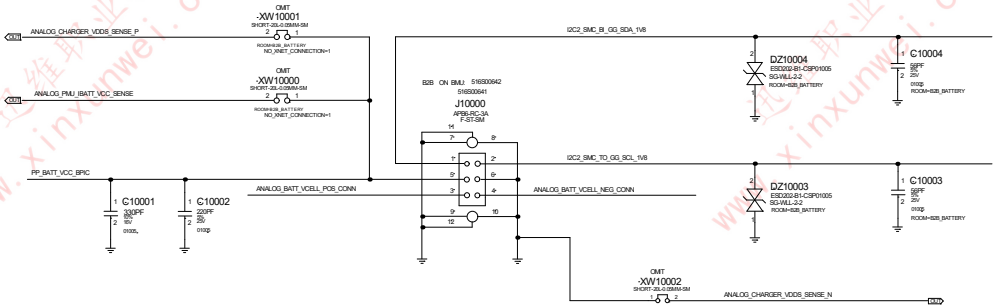

Backup VCELL Sense Local MLB Connection

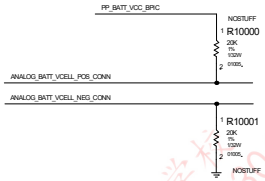

迅维职业技能培训学校
www.xinxunwei.com 18823306610

Number 99

鑫智造图纸
XZZ drawing

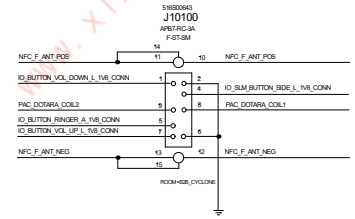

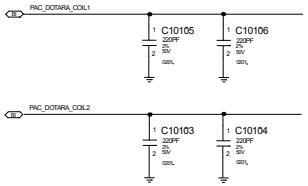

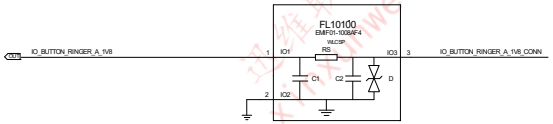

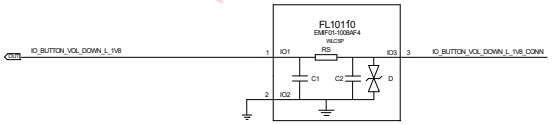

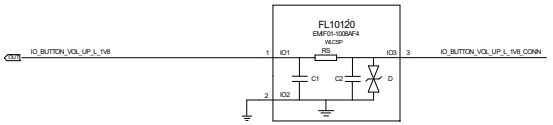

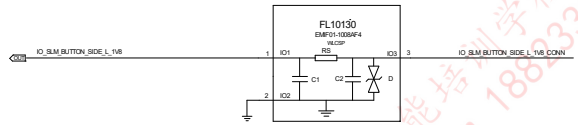

迅维职业技能培训学校
www.xinxunwei.com 18823306610

Number100

鑫智造图纸
XZZ drawing

WIDE CAMERA B2B

CONNECTOR

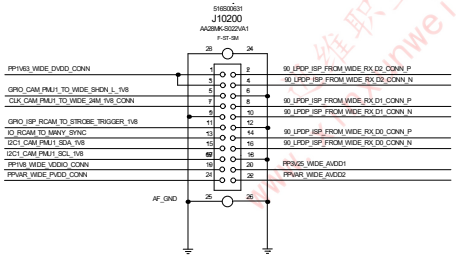

IO FILTERS

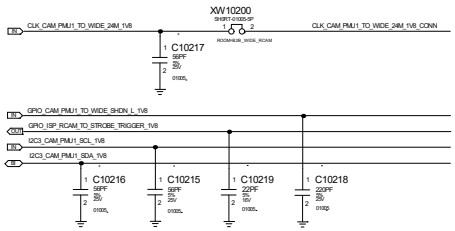

LPDP FILTERS

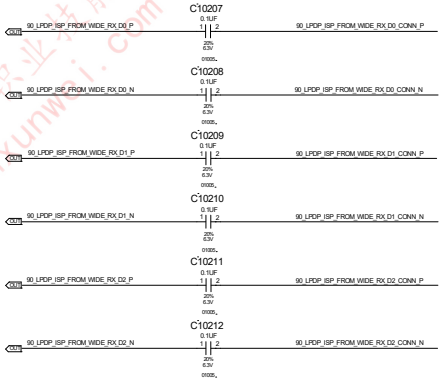

POWER FILTERS

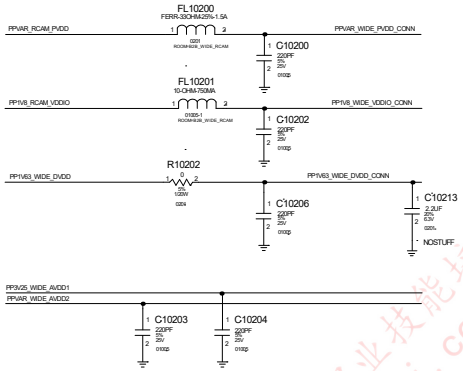

迅维职业技能培训学校 www.xinxunwei.com 18823306610

Number 101

鑫智造图纸 XZZ drawing

CONNECTOR

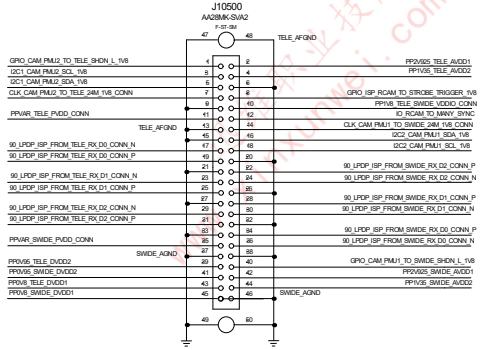

POWER FILTERS

TELE

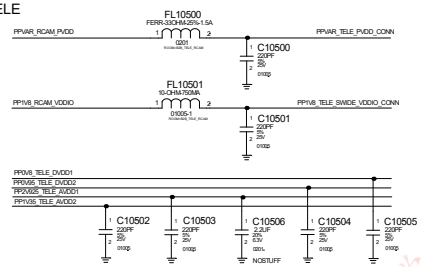

SWIDE

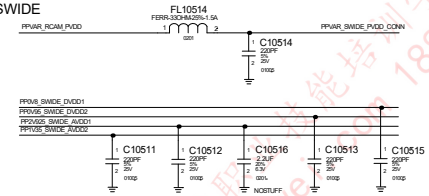

LPDP FILTERS

TELE

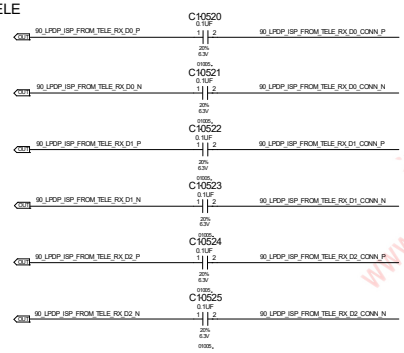

SWIDE

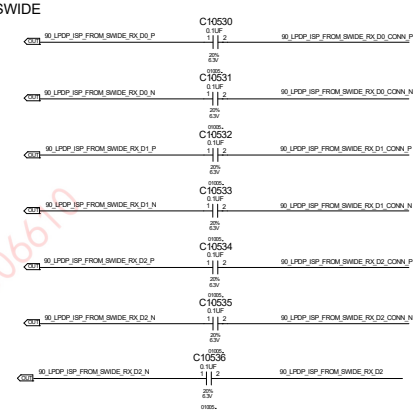

TELE

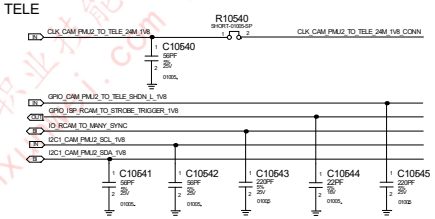

SWIDE

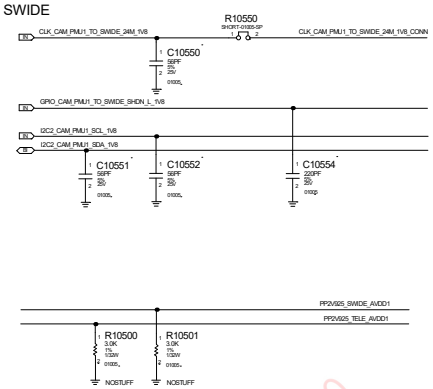

迅维职业技能培训学校 www.xinxunwei.com 18823306610

Number 102

鑫智造图纸
XZZ drawing

JASPER CONNECTOR

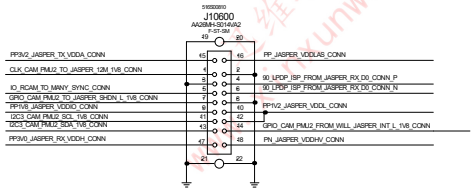

IO FILTERS

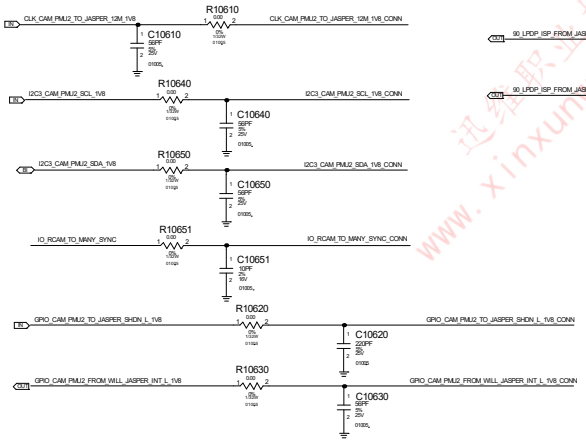

LPDP FILTERS

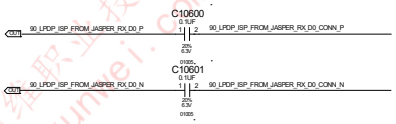

POWER FILTERS

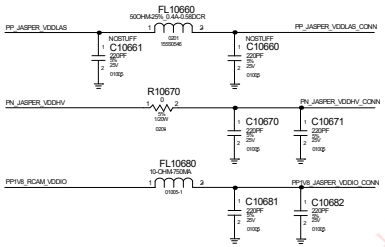

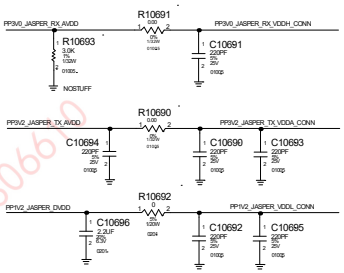

迅维职业技能培训学校 www.xinxunwei.com 18823306610

Number 103

鑫智造图纸 XZZ drawing

FCAM B2B

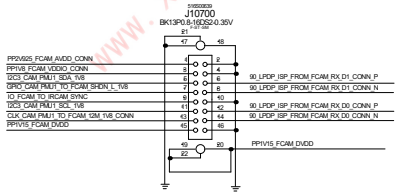

LPDP FILTERS

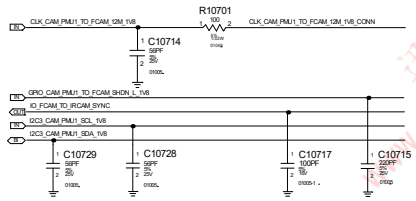

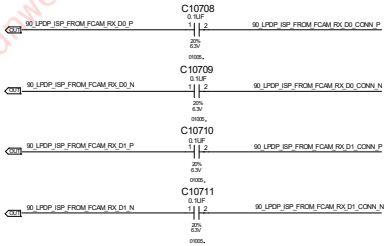

POWER FILTERS

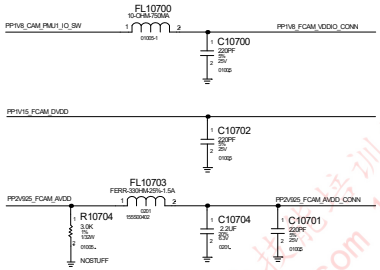

迅维职业技能培训学校 www.xinxunwei.com 18823306610

Number104

鑫智造图纸
XZZ drawing

SMP B2B

CONNECTOR

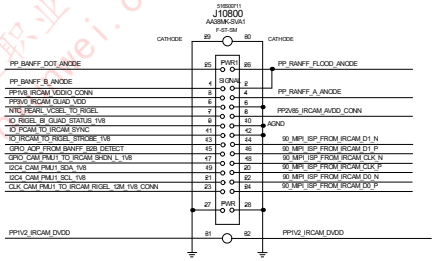

IO FILTERS

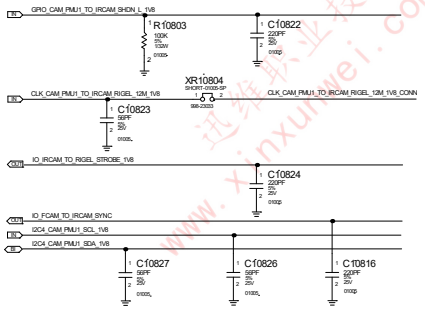

POWER FILTERS

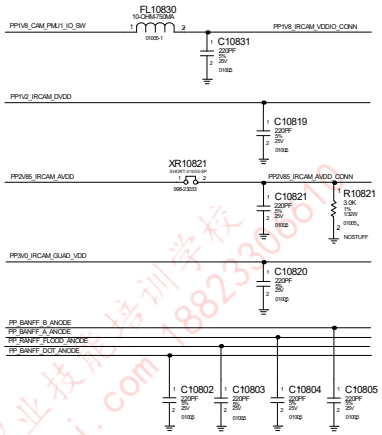

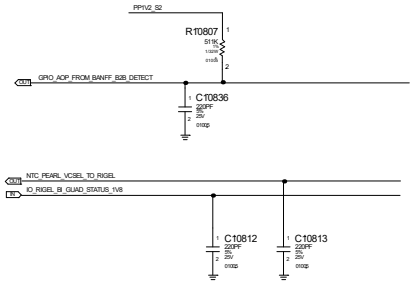

迅维职业技能培训学校 www.xinxunwei.com 18823306610

Number105

鑫智造图纸
XZZ drawing

CONNECTOR

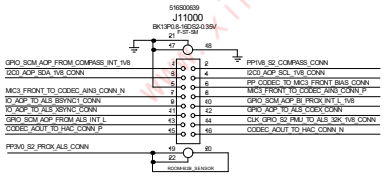

MIC3

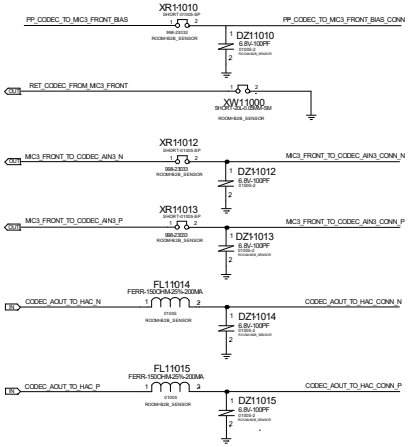

IO FILTERS

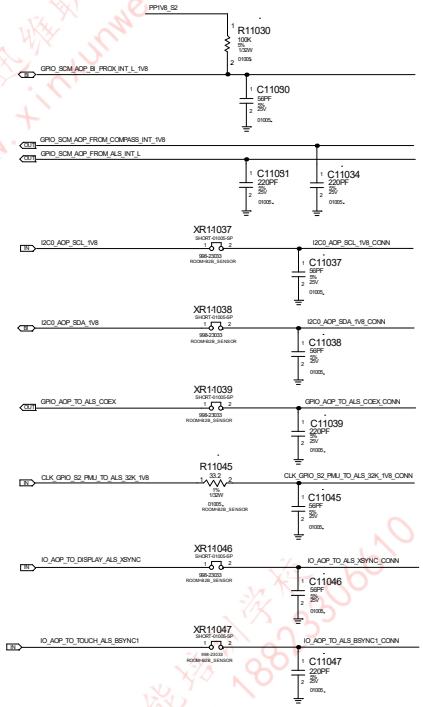

POWER FILTERS

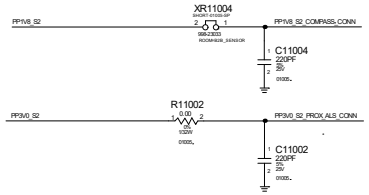

迅维职业技能培训学校 www.xinxunwei.com 18823306610

Number106

鑫智造图纸
XZZ drawing

CONNECTOR

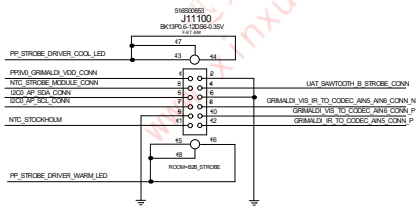

GRIMALDI

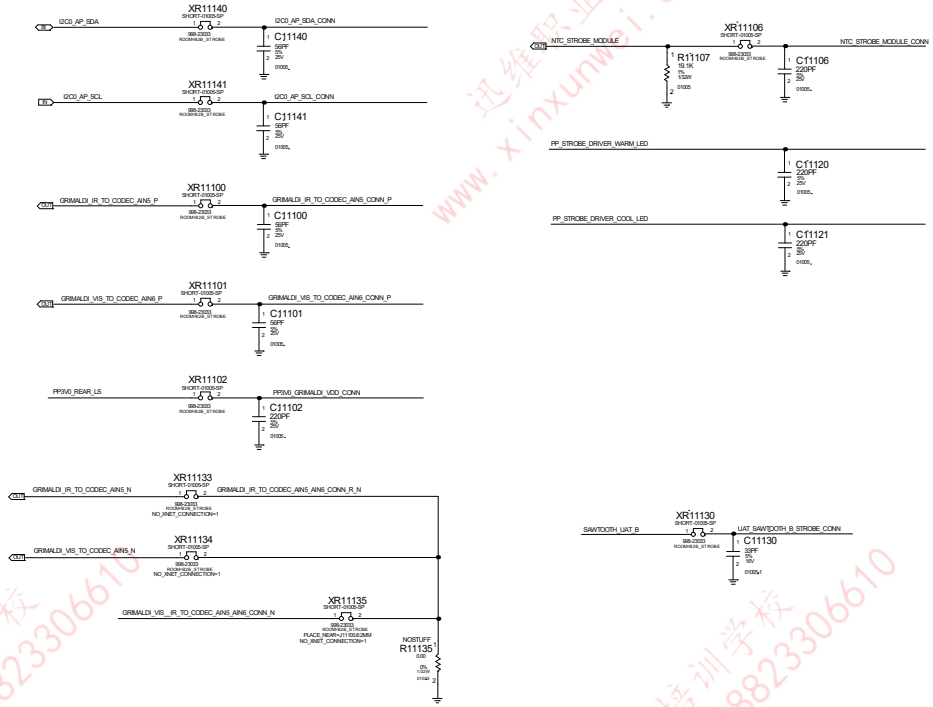

迅维职业技能培训学校
www.xinxunwei.com 18823306610

Number 107

鑫智造图纸
XZZ drawing

DOCK CONNECTOR

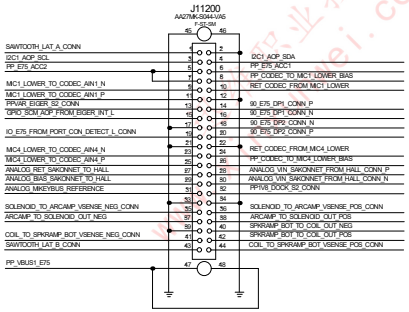

POWER FILTERS

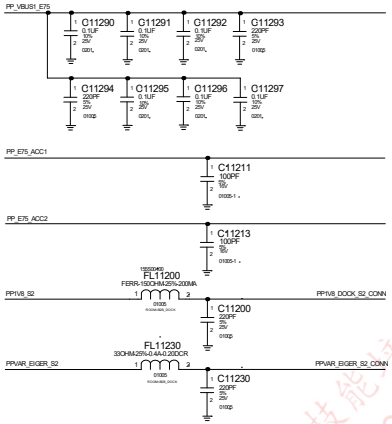

MIC1 + MIC4

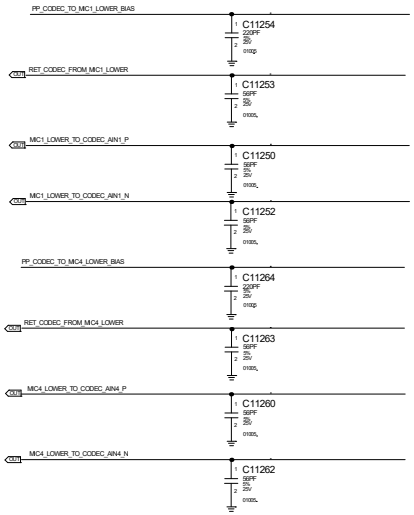

SAKONNET

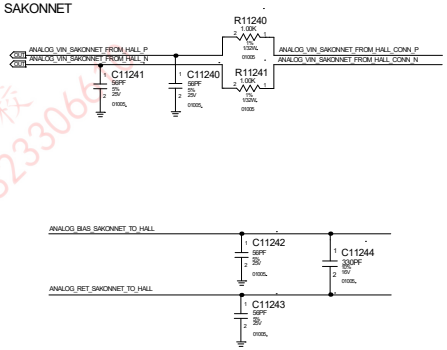

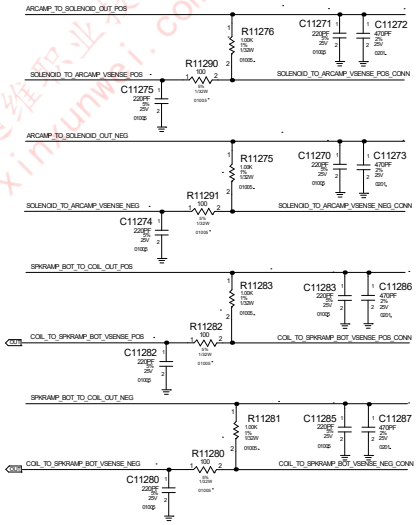

IO FILTERS

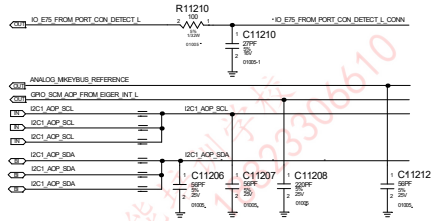

迅维职业技能培训学校 www.xinxunwei.com 18823306610

Number108

鑫智造图纸
XZZ drawing

DOCK SAWTOOTH FILTERS

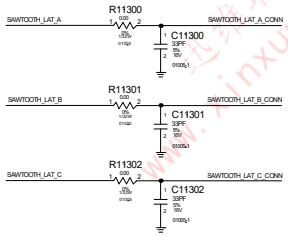

POWER FILTERS

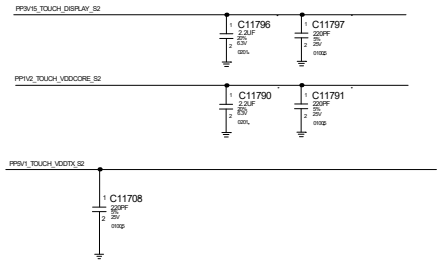

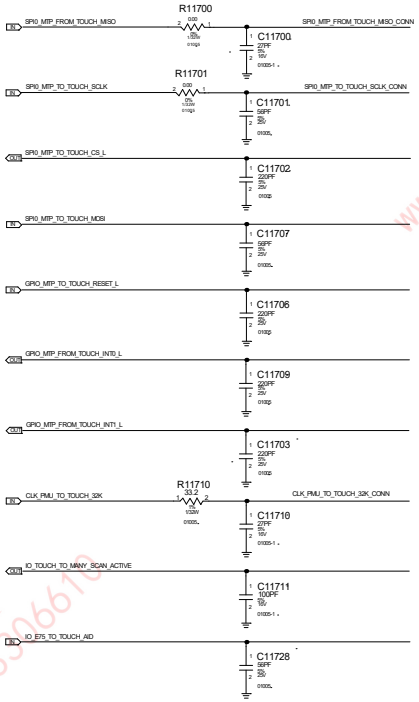

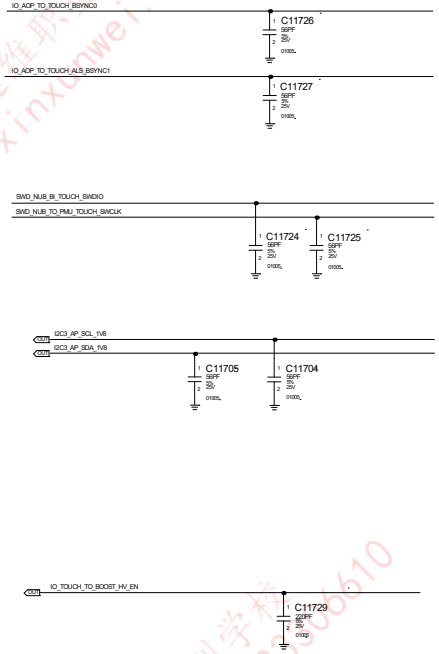

迅维职业技能培训学校 www.xinxunwei.com 18823306610

Number 109

鑫智造图纸
XZZ drawing

CONNECTOR

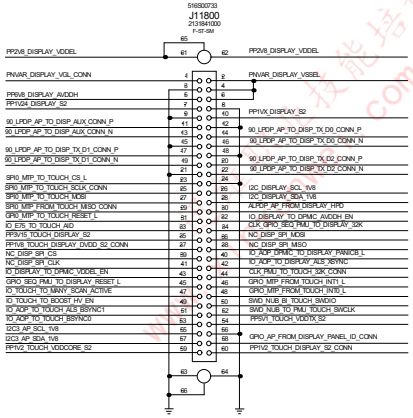

IO FILTERS

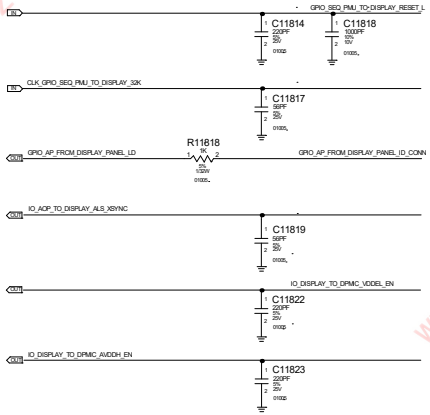

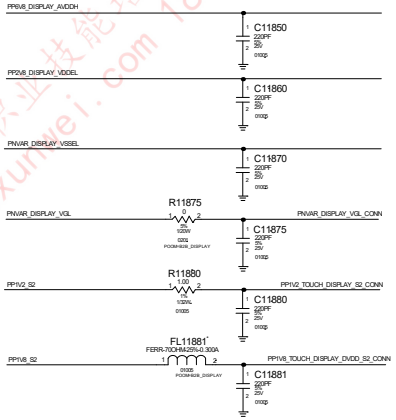

LPDP FILTERS

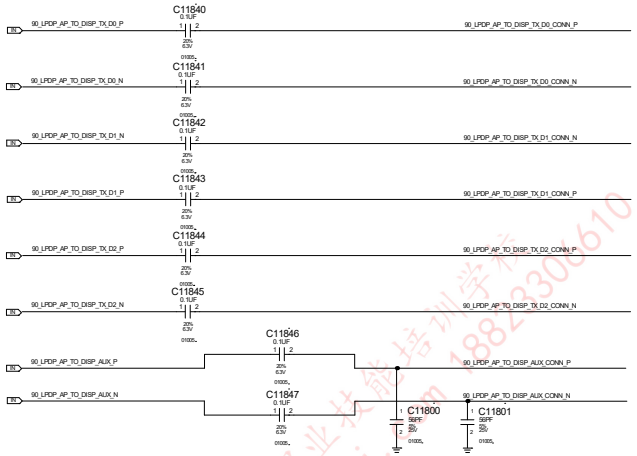

IO FILTERS(cont.)

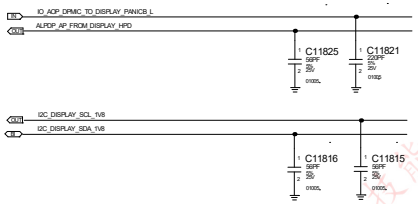

迅维职业技能培训学校 www.xinxunwei.com 18823306610

Number 110

鑫智造图纸
XZZ drawing

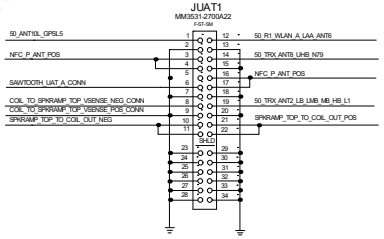

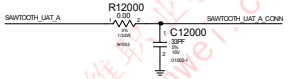

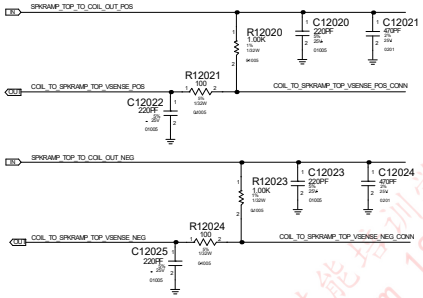

迅维职业技能培训学校
www.xinxunwei.com 18823306610

Number	111
鑫智造图纸 XZZ drawing	

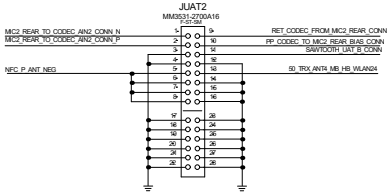

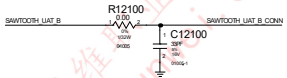

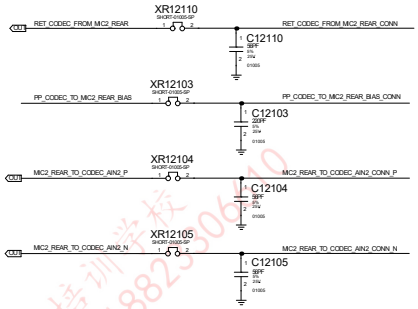

迅维职业技能培训学校
www.xinxunwei.com 18823306610

Number 112

鑫智造图纸
XZZ drawing

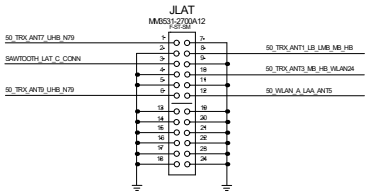

迅维职业技能培训学校
www.xinxunwei.com 18823306610

Number	113
鑫智造图纸 XZZ drawing	

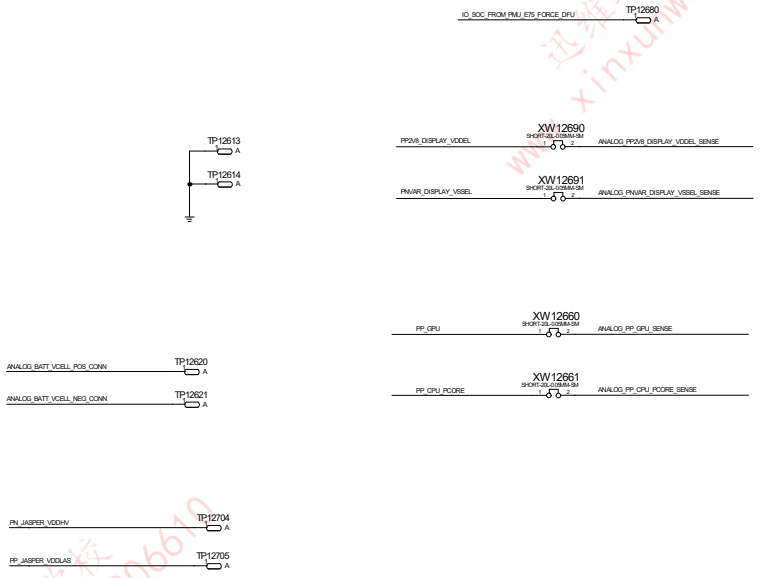

迅维职业技能培训学校
www.xinxunwei.com 18823306610

Number 114

鑫智造图纸
XZZ drawing

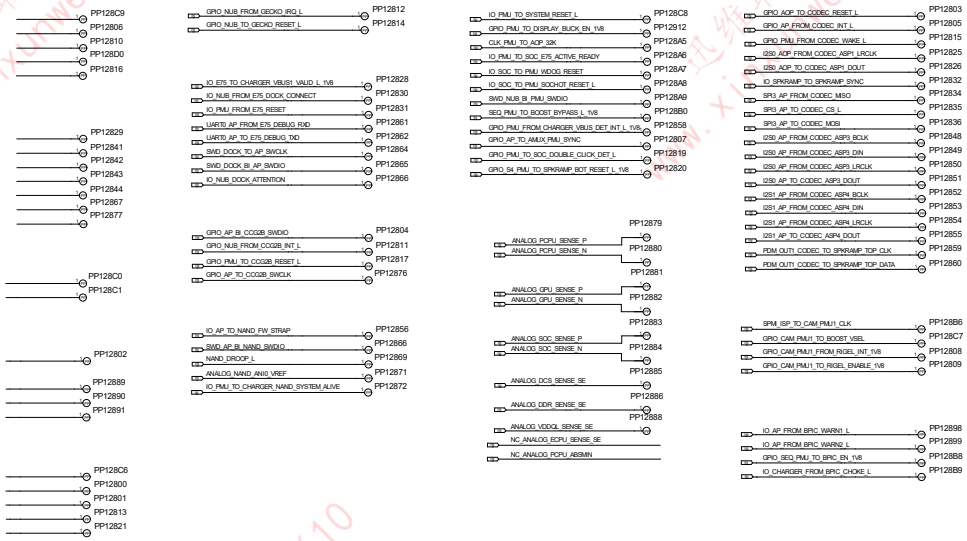

迅维职业技能培训学校
www.xinxunwei.com 18823306610

Number	115
鑫智造图纸 XZZ drawing	

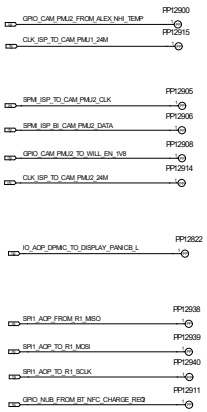

迅维职业技能培训学校
www.xinxunwei.com 18823306610

Number 116

鑫智造图纸
XZZ drawing

J_INT_BOT

998-25237
OMIT
SIM 1 OF 4

GND	1	IG31	
GND	2	IG32	
GND	3	IG33	
GND	4	IG34	
GND	5	IG35	
GND	6	IG36	
GND	7	IG37	
GND	8	IG38	
NFC_F_ANT_NEG	9	IG39	
NFC_F_ANT_NEG	10	IG310	
NFC_F_ANT_POS	11	IG311	
NFC_F_ANT_POS	12	IG312	
GND	13	IG313	
GND	14	IG314	
PP1V2_S4	15	IG315	
GND	16	IG316	
GND	17	IG317	
GND	18	IG318	
GPIO_SEQ_PMU_TO_BBPMU_RESET_L	19	IG319	
GND	20	IG320	
GPIO_S4_PMU_TO_WLAN_REG_ON	21	IG321	
GPIO_PMU_FROM_WLAN_HOST_WAKE	22	IG322	
GND	23	IG323	
GND	24	IG324	
90_PCIE_GP2_AP_TO_WLAN_TX_N	25	IG325	
GND	26	IG326	
90_PCIE_GP2_AP_TO_WLAN_TX_P	27	IG327	
GND	28	IG328	
GND	29	IG329	
GND	30	IG330	
90_PCIE_GP2_AP_TO_WLAN_REFCLK_N	31	IG331	
GND	32	IG332	
90_PCIE_GP2_AP_TO_WLAN_REFCLK_P	33	IG333	
GND	34	IG334	
GND	35	IG335	
GND	36	IG336	
90_PCIE_GP2_AP_FROM_WLAN_RX_P	37	IG337	
GND	38	IG338	
90_PCIE_GP2_AP_FROM_WLAN_RX_N	39	IG339	
GND	40	IG340	
GND	41	IG341	
PCIE_GP2_AP_TO_WLAN_PERST_L	42	IG342	
PP3V0_S2	43	IG343	
GPIO_BT_TO_BOT_SPKR_TRIG	44	IG344	
GPIO_AP_FROM_WLAN_TIME_SYNC	45	IG345	
GPIO_AP_FROM_BB_RESET_DETECT_L	46	IG346	
PCIE_GP2_AP_B_WLAN_CLKREQ_L	47	IG347	
SWD_AP_TO_MANY_SWCLK	48	IG348	
ANALOG_PP_GPU_SENSE	49	IG349	
PCIE_GP0_AP_B_BB_CLKREQ_L	50	IG350	
GND	51	IG351	
GPIO_AP_TO_BB_COREDUMP	52	IG352	
PCIE_GP0_AP_TO_BB_PERST_L	53	IG353	
GND	54	IG354	
GPIO_AP_CANARY1	55	IG355	
PP_VDD_MAIN	56	IG356	
GPIO_AP_TO_BBPMU_DEBUG_EN	57	IG357	
PP_VDD_MAIN	58	IG358	
GND	59	IG359	
PP_VDD_MAIN	60	IG360	
GND	61	IG361	
PP_VDD_MAIN	62	IG362	
GND	63	IG363	
PP_VDD_MAIN	64	IG364	
GND	65	IG365	
PP_VDD_MAIN	66	IG366	
PP_VDD_MAIN	67	IG367	
GND	68	IG368	
GND	69	IG369	
GND	70	IG370	
PP_VDD_MAIN	71	IG371	
GND	72	IG372	
PP_VDD_MAIN	73	IG373	
GND	74	IG374	
GND	75	IG375	
GND	76	IG376	
ANALOG_UAT_5G_FEM_TO_WLAN_PDTS	77	IG377	
GND	78	IG378	
GND	79	IG379	
GND	80	IG380	
CLK_GPIO_S4_PMU_TO_WLAN_R1_32K	81	IG381	
GND	82	IG382	
GND	83	IG383	
GND	84	IG384	
SPM0_HEB_AOP_B_BB_WLAN_NFC_DATA	85	IG385	
GND	86	IG386	
SPM0_HEB_AOP_TO_BB_WLAN_NFC_CLK	87	IG387	
UART2_AOP_TO_BB_TXD	88	IG388	
SPM1_CODEX_AOP_B_BB_WLAN_R1_DATA	89	IG389	
GND	90	IG390	
SPM1_CODEX_AOP_TO_BB_WLAN_R1_CLK	91	IG391	
GPIO_AOP_TO_BB_FORCE_PWM	92	IG392	
GND	93	IG393	
GND	94	IG394	
50_RX_XCVR_DRX05_UHB_DSM_UHB_OUT2	95	IG395	
GND	96	IG396	
50_RX_XCVR_DRX04_UHB_DSM_UHB_RX_OUT1	97	IG397	
GND	98	IG398	
50_RX_XCVR_DRX02_UHB_DSM_N79_RX_OUT1	99	IG399	
GND	100	IG3100	
50_RX_XCVR_DRX03_UHB_DSM_N79_RX_OUT2	101	IG3101	
GND	102	IG3102	
GND	103	IG3103	
GND	104	IG3104	
50_TRX_UHB_PORTB	105	IG3105	
GND	106	IG3106	
GND	107	IG3107	
50_LAA_RX_XCVR_PRX10	108	IG3108	
GND	109	IG3109	
GND	110	IG3110	
50_WLAN_A_C0_TXRX_FEM_M	111	IG3111	
GND	112	IG3112	
GND	113	IG3113	
GND	114	IG3114	
SHIELD_RFFE5_SCLK_SDR	115	IG3115	
GND	116	IG3116	
SHIELD_RFFE5_SDATA_SDR	117	IG3117	
GND	118	IG3118	
GND	119	IG3119	
GND	120	IG3120	
GND	121	IG3121	
GND	122	IG3122	
GND	123	IG3123	
PP_VIO_RFFE_UAT_1V8	124	IG3124	
GPIO_RT_TO_BB_LAA_SW_CTRL	125	IG3125	
PP1V8_S4	126	IG3126	
GND	127	IG3127	
GND	128	IG3128	
RFFE_WLAN_TO_UAT_5G_FEM_RST_L	129	IG3129	
SHIELD_RFFE_WLAN_TO_UAT_FEM5_DATA	130	IG3130	
GPIO_WLAN_TO_UAT_5G_FEM_LNA_BYP_EN	131	IG3131	
SHIELD_RFFE_WLAN_TO_UAT_FEM5_CLK	132	IG3132	
GND	133	IG3133	
GND	134	IG3134	
GND	135	IG3135	
PP_VDD_RF_UAT_1V2	136	IG3136	
GND	137	IG3137	
SAMTOOTH_UAT_A	138	IG3138	
GND	139	IG3139	
GND	140	IG3140	
GPIO_BB_TO_R1_LAA_REQ	141	IG3141	
GPIO_WLAN_TO_R1_COEX	142	IG3142	
GND	143	IG3143	
IO_BT_TO_R1_TIME_SYNC	144	IG3144	
GND	145	IG3145	
GPIO_R1_TO_WLAN_COEX	146	IG3146	
GND	147	IG3147	
GND	148	IG3148	
GND	149	IG3149	
50_RX_GNSS_L5_XCVR	150	IG3150	
GND	151	IG3151	
GND	152	IG3152	
SDR_GNSS_LNA_L5_EN	153	IG3153	
IO_BT_TO_R1_WAKE	154	IG3154	
GND	155	IG3155	
GND	156	IG3156	
GND	157	IG3157	
GND	158	IG3158	
GND	159	IG3159	
50_TRX_ANTZ_LB_LMB_MB_HB_L1	160	IG3160	
GND	161	IG3161	
GND	162	IG3162	
GND	163	IG3163	
GND	164	IG3164	
GND	165	IG3165	
GND	166	IG3166	
GND	167	IG3167	
GND	168	IG3168	
GND	169	IG3169	
GND	170	IG3170	
GND	171	IG3171	
GND	172	IG3172	
GND	173	IG3173	
GND	174	IG3174	

J_INT_BOT

998-25237
OMIT
SIM 2 OF 4

GND	175	IO4175	
GND	176	IO4176	
GND	177	IO4177	
GND	178	IO4178	
GND	179	IO4179	
GND	180	IO4180	
GND	181	IO4181	
GND	182	IO4182	
GND	183	IO4183	
GND	184	IO4184	
GND	185	IO4185	
GND	186	IO4186	
GND	187	IO4187	
GND	188	IO4188	
GND	189	IO4189	
GND	190	IO4190	
GND	191	IO4191	
GND	192	IO4192	
GND	193	IO4193	
50_TRX_CPLR_U_CPL2_ANT_LMB_MB_HB	194	IO4194	
GND	195	IO4195	
GND	196	IO4196	
GND	197	IO4197	
GND	198	IO4198	
GND	199	IO4199	
GND	200	IO4200	
GND	201	IO4201	
GND	202	IO4202	
GND	203	IO4203	
GND	204	IO4204	
GND	205	IO4205	
GND	206	IO4206	
GND	207	IO4207	
GND	208	IO4208	
GND	209	IO4209	
GND	210	IO4210	
GND	211	IO4211	
GND	212	IO4212	
GND	213	IO4213	
GND	214	IO4214	
GND	215	IO4215	
GND	216	IO4216	
GND	217	IO4217	
GND	218	IO4218	
GND	219	IO4219	
GND	220	IO4220	
GND	221	IO4221	
GND	222	IO4222	
GND	223	IO4223	
GND	224	IO4224	
GND	225	IO4225	
GPIO_NUB_FROM_BT_NFC_CHARGE_REQ	226	IO4226	
GND	227	IO4227	
GND	228	IO4228	
GND	229	IO4229	
GND	230	IO4230	
GND	231	IO4231	
GND	232	IO4232	
GND	233	IO4233	
GND	234	IO4234	
GND	235	IO4235	
GND	236	IO4236	
GND	237	IO4237	
GND	238	IO4238	
GND	239	IO4239	
GND	240	IO4240	
GND	241	IO4241	
GND	242	IO4242	
PP1V2_S2	243	IO4243	
GND	244	IO4244	
NFC_P_TEST_OUT	245	IO4245	
GND	246	IO4246	
GND	247	IO4247	
GND	248	IO4248	
GND	249	IO4249	
GND	250	IO4250	
GND	251	IO4251	
GND	252	IO4252	
GND	253	IO4253	
GND	254	IO4254	
GND	255	IO4255	
GND	256	IO4256	
GND	257	IO4257	
GND	258	IO4258	
GND	259	IO4259	
GND	260	IO4260	
SAMTOOTH_UAT_B	261	IO4261	
GND	262	IO4262	
GND	263	IO4263	
50_TRX_WLAN_G_BT_ANT4_NPLXR	264	IO4264	
GND	265	IO4265	
GND	266	IO4266	
GND	267	IO4267	
GND	268	IO4268	
GPIO_NFC_F_TO_NFC_P_COEX	269	IO4269	
GPIO_NFC_P_TO_NFC_F_COEX	270	IO4270	
PP_VDD_BOOST	271	IO4271	
GND	272	IO4272	
GND	273	IO4273	
GND	274	IO4274	
GND	275	IO4275	
GND	276	IO4276	
UART2_AOP_FROM_BB_RXD	277	IO4277	
GPIO_BB_TO_AP_GSM_TABLRST_IND_1V8	278	IO4278	
I2C_BT_TO_NFC_SDA	279	IO4279	
GND	280	IO4280	
I2C_BT_TO_NFC_SCL	281	IO4281	
GND	282	IO4282	
GND	283	IO4283	
GND	284	IO4284	
SWD_AP_B_BB_SWDIO	285	IO4285	
GND	286	IO4286	
GND	287	IO4287	
GND	288	IO4288	
GND	289	IO4289	
GND	290	IO4290	
PP_VDD_MAIN	291	IO4291	
GND	292	IO4292	
PP_VDD_MAIN	293	IO4293	
GND	294	IO4294	
PP_VDD_MAIN	295	IO4295	
GND	296	IO4296	
PP_VDD_MAIN	297	IO4297	
GND	298	IO4298	
GND	299	IO4299	
GND	300	IO4300	
I2S2_AP_FROM_BB_BCLK	301	IO4301	
GND	302	IO4302	
I2S2_AP_FROM_BB_LRCLK	303	IO4303	
GND	304	IO4304	
I2S2_AP_TO_BB_DOUT	305	IO4305	
GND	306	IO4306	
GPIO_AP_TO_BB_TIME_MARK	307	IO4307	
GPIO_AOP_TO_NFC_IRQNMAN_EN	308	IO4308	
I2S2_AP_FROM_BB_DIN	309	IO4309	
GND	310	IO4310	
90_PCIE_GP0_AP_TO_BB_TX_P	311	IO4311	
GND	312	IO4312	
90_PCIE_GP0_AP_TO_BB_TX_N	313	IO4313	
GND	314	IO4314	
GND	315	IO4315	
GND	316	IO4316	
90_PCIE_GP0_AP_TO_BB_REFCLK_P	317	IO4317	
GND	318	IO4318	
90_PCIE_GP0_AP_TO_BB_REFCLK_N	319	IO4319	
GND	320	IO4320	
GND	321	IO4321	
GND	322	IO4322	
90_PCIE_GP0_AP_FROM_BB_RX_P	323	IO4323	
GND	324	IO4324	
90_PCIE_GP0_AP_FROM_BB_RX_N	325	IO4325	
GND	326	IO4326	
GND	327	IO4327	
GPIO_ISP_RCAM_TO_STROBE_E75_WLAN_FLASH_TRIG	328	IO4328	
PP1V8_S2	329	IO4329	
GND	330	IO4330	
ANALOG_PP_CPU_PCORE_SENSE	331	IO4331	
GND	332	IO4332	
GPIO_SE_TO_BT_PKT_RDY	333	IO4333	
GND	334	IO4334	
GPIO_AP_FROM_BT_AUDIO_SYNC	335	IO4335	
ANALOG_VDD_SNS_BPC_CV_R	336	IO4336	
GND	337	IO4337	
GND	338	IO4338	
GND	339	IO4339	
GND	340	IO4340	
NTC_RADIO_PA_SE	341	IO4341	
GND	342	IO4342	
GND	343	IO4343	
NTC_RADIO_PB_SE	344	IO4344	
IO_DCDSRA_RESET_L	345	IO4345	
GND	346	IO4346	
GPIO_AOP_TO_WLAN_CONTEXT_B	347	IO4347	
GPIO_AOP_TO_WLAN_CONTEXT_A	348	IO4348	

迅维职业技能培训学校 www.xinxunwei.com 18823306610

Number 117

鑫智造图纸
XZZ drawing

J_INT_BOT

GND	348	IO949	IC435	436	GND
AMUX_PMU_BY	350	IO950	IC437	437	IO_CHARGER_FROM_DOTARA_BST_EN
AMUX_PMU_AY	351	IO951	IC438	438	GND
GND	352	IO952	IC439	439	IO_CHARGER_FROM_DOTARA_BST_FPWM
PP1V8_S2	353	IO953	IC440	440	GND
GND	354	IO954	IC441	441	GND
GND	355	IO955	IC442	442	GND
GND	356	IO956	IC443	443	I2C2_SMC_BI_GG_SDA_1V8
PP_VDD_MAIN	357	IO957	IC444	444	GND
GND	358	IO958	IC445	445	I2C2_SMC_TO_GG_SCL_1V8
PP_VDD_MAIN	359	IO959	IC446	446	GND
GND	360	IO960	IC447	447	GND
PP_VDD_MAIN	361	IO961	IC448	448	GND
GND	362	IO962	IC449	449	GND
GND	363	IO963	IC450	450	GND
PP_VDD_MAIN	364	IO964	IC451	451	GND
GND	365	IO965	IC452	452	GND
GND	366	IO966	IC453	453	GND
GND	367	IO967	IC454	454	GND
NC_90_USB_BB_R_P	368	IO968	IC455	455	GND
GND	369	IO969	IC456	456	GND
NC_90_USB_BB_R_N	370	IO970	IC457	457	GND
GND	371	IO971	IC458	458	GND
GND	372	IO972	IC459	459	GND
GND	373	IO973	IC460	460	GND
IO_TOUCH_TO_MANY_SCAN_ACTIVE	374	IO974	IC461	461	GND
GND	375	IO975	IC462	462	GND
GPIO_PMU_FROM_BB_PCIE_HOST_WAKE_L	376	IO976	IC463	463	GND
GND	377	IO977	IC464	464	GND
GPIO_SEQ_PMU_TO_DOTARA_EN_SYS	378	IO978	IC465	465	PP_BATT_VCC_BPIC
GND	379	IO979	IC466	466	GND
GND	380	IO980	IC467	467	PP_BATT_VCC_BPIC
GND	381	IO981	IC468	468	GND
GND	382	IO982	IC469	469	PP_BATT_VCC_BPIC
GND	383	IO983	IC470	470	GND
IO_TOUCH_TO_BOOST_HV_EN	384	IO984	IC471	471	GND
GND	385	IO985	IC472	472	PP_BATT_VCC_BPIC
PP5V1_TOUCH_VDDTX_S2	386	IO986	IC473	473	GND
GND	387	IO987	IC474	474	PP_BATT_VCC_BPIC
GND	388	IO988	IC475	475	GND
GND	389	IO989	IC476	476	PP_BATT_VCC_BPIC
SAWTOOTH_LAT_A	390	IO990	IC477	477	GND
GND	391	IO991	IC478	478	GND
SAWTOOTH_LAT_B	392	IO992	IC479	479	GND
GND	393	IO993	IC480	480	GND
SAWTOOTH_LAT_C	394	IO994	IC481	481	GND
GND	395	IO995	IC482	482	GND
GND	396	IO996	IC483	483	GND
GND	397	IO997	IC484	484	GND
GND	398	IO998	IC485	485	GND
GND	399	IO999	IC486	486	GND
GND	400	IO400	IC487	487	GND
GND	401	IO401	IC488	488	GND
GND	402	IO402	IC489	489	GND
PP1V2_S2	403	IO403	IC490	490	GND
GND	404	IO404	IC491	491	GND
GND	405	IO405	IC492	492	GND
GND	406	IO406	IC493	493	GND
GND	407	IO407	IC494	494	GND
GND	408	IO408	IC495	495	GND
PP_VBUS2_DOTARA	409	IO409	IC496	496	GND
GND	410	IO410	IC497	497	GND
PP_VBUS2_DOTARA	411	IO411	IC498	498	SPM1_NUB_TO_BPIC_DOTARA_CLK
GND	412	IO412	IC499	499	GND
PP_VBUS2_DOTARA	413	IO413	IC500	500	SPM1_NUB_BI_BPIC_DOTARA_DATA
GND	414	IO414	IC501	501	GND
PP_VBUS2_DOTARA	415	IO415	IC502	502	GND
GND	416	IO416	IC503	503	GND
GND	417	IO417	IC504	504	GND
GND	418	IO418	IC505	505	GND
GND	419	IO419	IC506	506	GND
GND	420	IO420	IC507	507	GND
GND	421	IO421	IC508	508	GND
GND	422	IO422	IC509	509	GND
GND	423	IO423	IC510	510	GND
GND	424	IO424	IC511	511	GND
GND	425	IO425	IC512	512	GND
GND	426	IO426	IC513	513	PNVAR_DISPLAY_VGL
GND	427	IO427	IC514	514	GND
GND	428	IO428	IC515	515	PP5V8_DISPLAY_AVDDH
GND	429	IO429	IC516	516	GND
GND	430	IO430	IC517	517	ANALOG_PNVAR_DISPLAY_VSSEL_SENSE
GND	431	IO431	IC518	518	GND
GND	432	IO432	IC519	519	PNVAR_DISPLAY_VSSEL
ANALOG_FB_DOMRA_TO_CHARGER	433	IO433	IC520	520	GND
GND	434	IO434	IC521	521	ANALOG_PP2V8_DISPLAY_VDDEL_SENSE
GND	435	IO435	IC522	522	GND

J_INT_BOT

PP2V8_DISPLAY_VDDEL	523	IO623	IC609	609	GND
GND	524	IO624	IC610	610	GND
GND	525	IO625	IC611	611	GND
GND	526	IO626	IC612	612	GND
GND	527	IO627	IC613	613	RFFE_WLAN_TO_LAT_2G_FEM_RST_L
PP_VDD_RF_LAT_1V2	528	IO628	IC614	614	GPIO_WLAN_TO_LAT_2G_FEM_LNA_BYP_EN
GND	529	IO629	IC615	615	GND
SHIELD_RFFE_WLAN_TO_LAT_FEMS_DATA	530	IO630	IC616	616	GND
GND	531	IO631	IC617	617	ANALOG_LAT_2G_FEM_TO_WLAN_PDTS
GND	532	IO632	IC618	618	GND
50_WLAN_G_C1_TXRX_FEM_M	533	IO633	IC619	619	GND
GND	534	IO634	IC620	620	SHIELD_RFFE1_SCLK_SDR
GND	535	IO635	IC621	621	SHIELD_RFFE1_SDATA_SDR
50_RX_XCVR_PRX04_N79_RX_OUT1	536	IO636	IC622	622	GND
GND	537	IO637	IC623	623	GND
GND	538	IO638	IC624	624	GND
50_RX_XCVR_PRX06_UHB_RX_OUT1	539	IO639	IC625	625	50_CPLR_L_CPL1_LAT_OUT
50_RX_XCVR_PRX15_N79_RX_OUT2	540	IO640	IC626	626	GND
50_RX_XCVR_PRX07_UHB_RX_OUT2	541	IO641	IC627	627	GND
GND	542	IO642	IC628	628	GND
GND	543	IO643	IC629	629	GND
GPIO_WLAN_TO_LAT_5G_FEM_LNA_BYP_EN	544	IO644	IC630	630	50_TRX_HB_PAD_ANT2_M
RFFE_WLAN_TO_LAT_5G_FEM_RST_L	545	IO645	IC631	631	GND
GND	546	IO646	IC632	632	GND
GND	547	IO647	IC633	633	50_TRX_HB_PAD_ANT1
ANALOG_LAT_5G_FEM_TO_WLAN_PDTS	548	IO648	IC634	634	GND
GND	549	IO649	IC635	635	GND
GND	550	IO650	IC636	636	GND
50_TX_IN_TX2_UHB_PAD_TX N79_IN	551	IO651	IC637	637	GND
GND	552	IO652	IC638	638	50_TRX_IN_LMB_PAD_2G_LB_OUT_M
GND	553	IO653	IC639	639	GND
PP_APT_PA_LOWER	554	IO654	IC640	640	GND
PP_APT_PA_LOWER	555	IO655	IC641	641	GND
PP_APT_PA_LOWER	556	IO656	IC642	642	GND
GND	557	IO657	IC643	643	GND
GND	558	IO658	IC644	644	GND
SHIELD_RFFE3_SCLK_SDR	559	IO659	IC645	645	GND
SHIELD_RFFE3_SDATA_SDR	560	IO660	IC646	646	PAC_DOTARA_COIL2
GND	561	IO661	IC647	647	GND
GND	562	IO662	IC648	648	PAC_DOTARA_COIL2
50_WLAN_A_C1_TXRX_FEM_M	563	IO663	IC649	649	GND
GND	564	IO664	IC650	650	PAC_DOTARA_COIL2
GND	565	IO665	IC651	651	GND
50_LAA_RX_XCVR_PRX02	566	IO666	IC652	652	PAC_DOTARA_COIL1
GND	567	IO667	IC653	653	GND
GND	568	IO668	IC654	654	PAC_DOTARA_COIL1
50_UHB_L_CPLR_OUT	569	IO669	IC655	655	GND
GND	570	IO670	IC656	656	PAC_DOTARA_COIL1
GND	571	IO671	IC657	657	GND
50_TRX_UHB_PORTB_TX_PA	572	IO672	IC658	658	GND
GND	573	IO673	IC659	659	50_TRX_LB_PORTB_TX_M
GND	574	IO674	IC660	660	GND
50_TX_IN_XCVR_TX0_LB	575	IO675	IC661	661	GND
50_TX_IN_XCVR_TX1_LB_JB	576	IO676	IC662	662	GND
GND	577	IO677	IC663	663	50_TRX_LB_PORTB_RX1_M
GND	578	IO678	IC664	664	GND
SHIELD_RFFE3_SDATA_SDR	579	IO679	IC665	665	GND
SHIELD_RFFE3_SCLK_SDR	580	IO680	IC666	666	GND
GND	581	IO681	IC667	667	GND
GND	582	IO682	IC668	668	GND
PP_QET1_PA	583	IO683	IC669	669	GND
PP_QET1_PA	584	IO684	IC670	670	GND
GND	585	IO685			
GND	586	IO686			
SHIELD_RFFE2_SCLK_SDR	587	IO687			
SHIELD_RFFE2_SDATA_SDR	588	IO688			
GND	589	IO689			
GND	590	IO690			
50_RX_XCVR_PRX00_LB_PRX_OUT2	591	IO691			
50_RX_XCVR_PRX6_LB_A_RX0	592	IO692			
GND	593	IO693			
PP_VIO_RFFE_LAT_1V8	594	IO694			
GND	595	IO695			
GND	596	IO696			
GND	597	IO697			
GND	598	IO698			
GND	599	IO699			
GND	600	IO600			
GND	601	IO601			
SHIELD_RFFE_WLAN_TO_LAT_FEMS_CLK	602	IO602			
GND	603	IO603			
GND	604	IO604			
50_TX_IN_TX2_UHB_PAD_TX_UHB_IN_1	605	IO605			
GND	606	IO606			
GND	607	IO607			
GND	608	IO608			

迅维职业技能培训学校 www.xinxunwei.com 18823306610

Number 118

鑫智造图纸
XZZ drawing

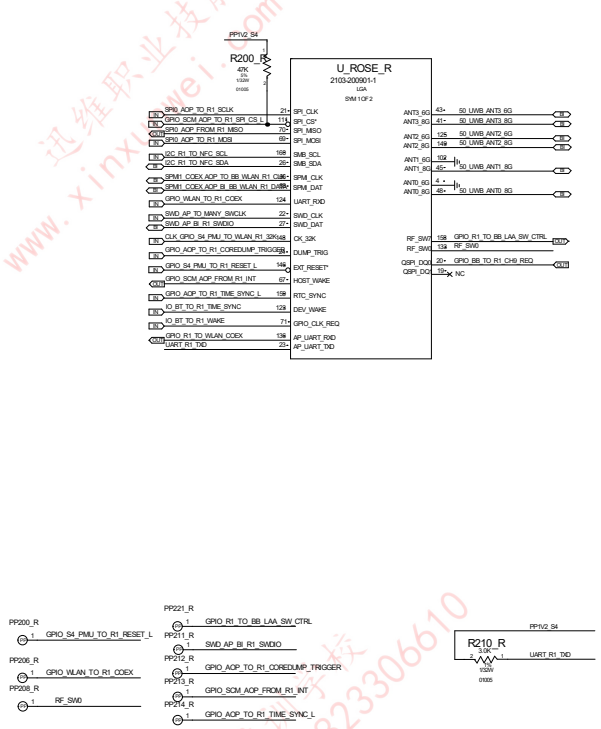

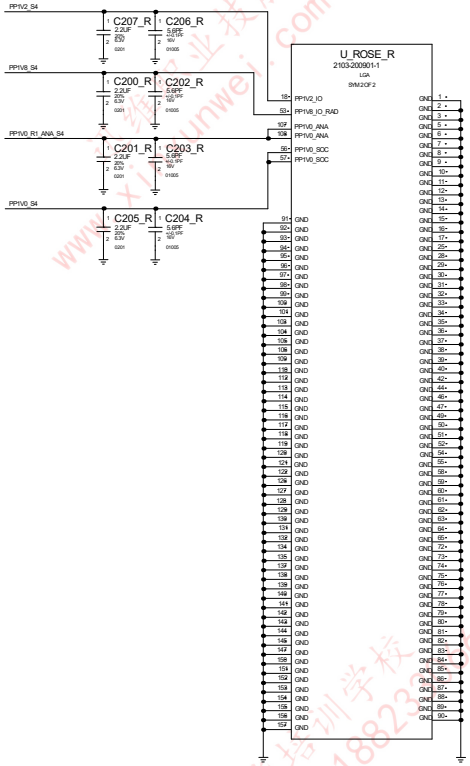

迅维职业技能培训学校
www.xinxunwei.com 18823306610

Number	119
鑫智造图纸 XZZ drawing	

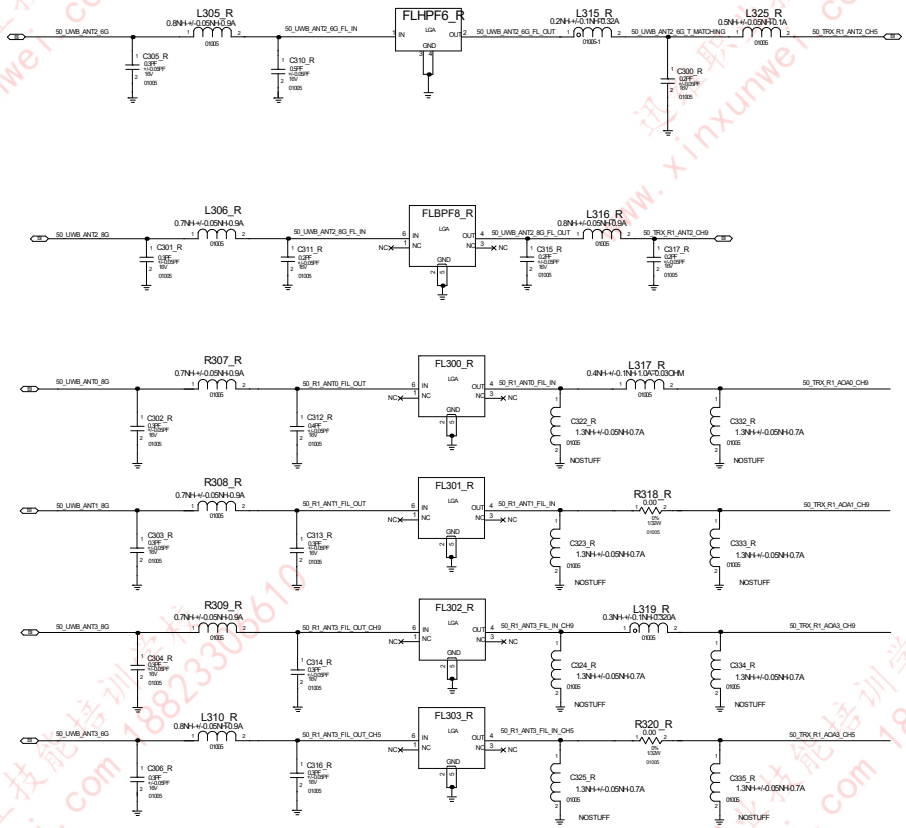

迅维职业技能培训学校 www.xinxunwei.com 18823306610

Number 120

鑫智造图纸
XZZ drawing

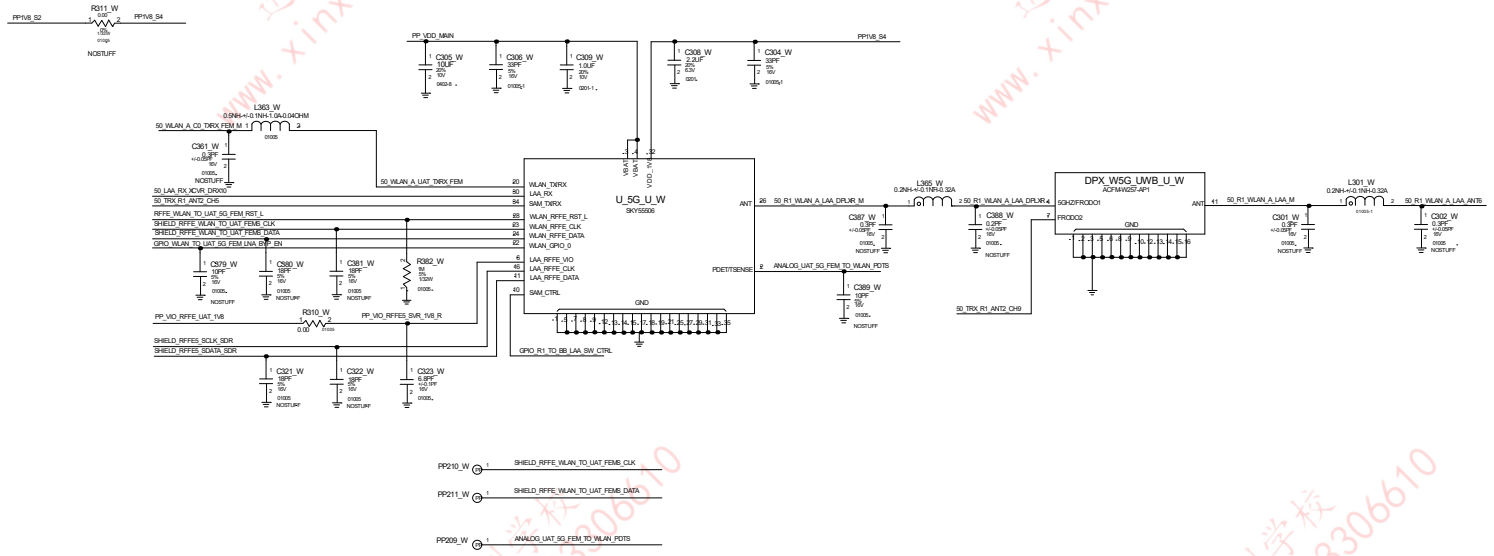

迅维职业技能培训学校 www.xinxunwei.com 18823306610

Number 121

鑫智造图纸
XZZ drawing

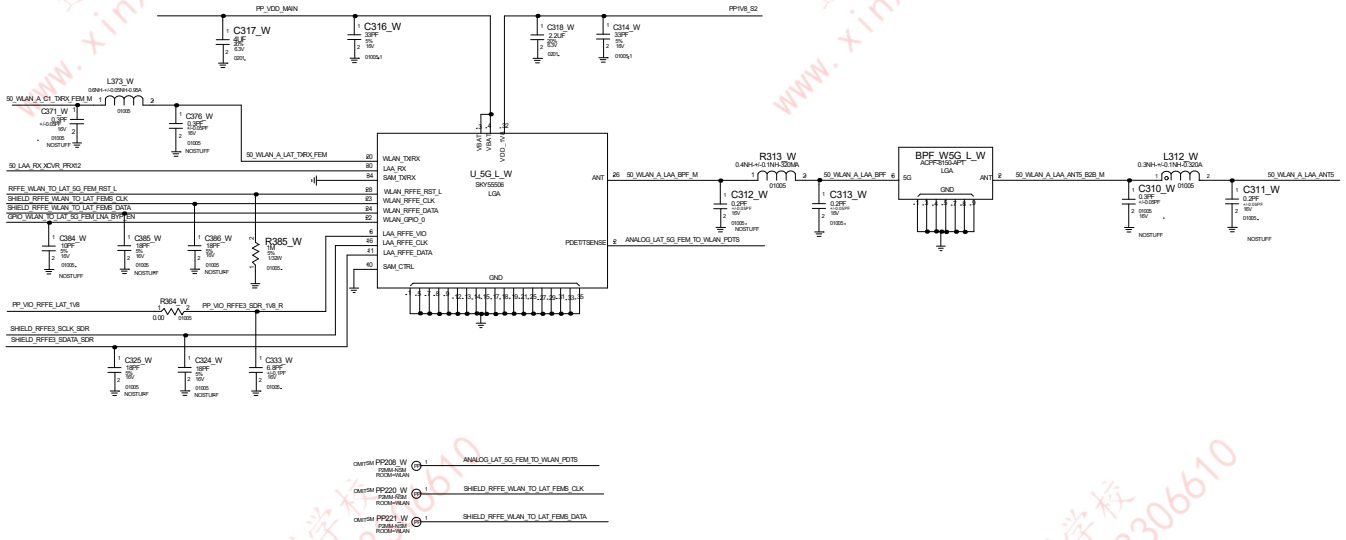

迅维职业技能培训学校
www.xinxunwei.com 18823306610

Number 122

鑫智造图纸
XZZ drawing

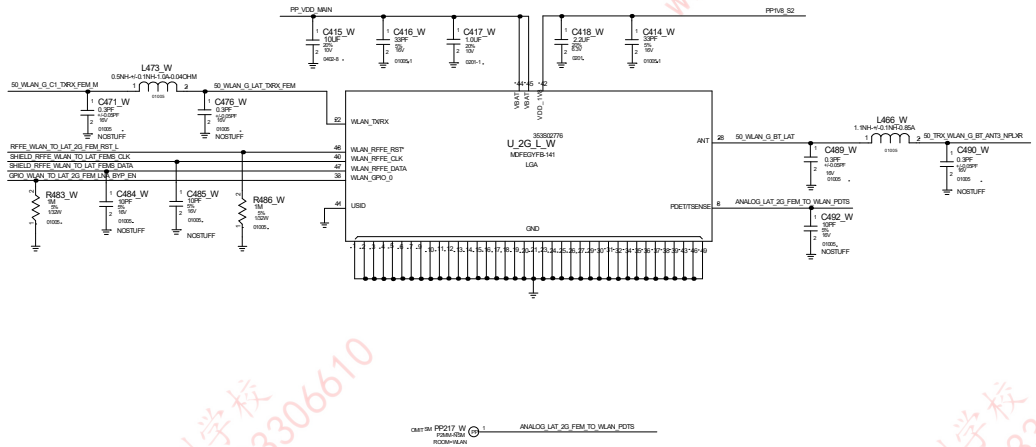

迅维职业技能培训学校
www.xinxunwei.com 18823306610

Number123

鑫智造图纸
XZZ drawing

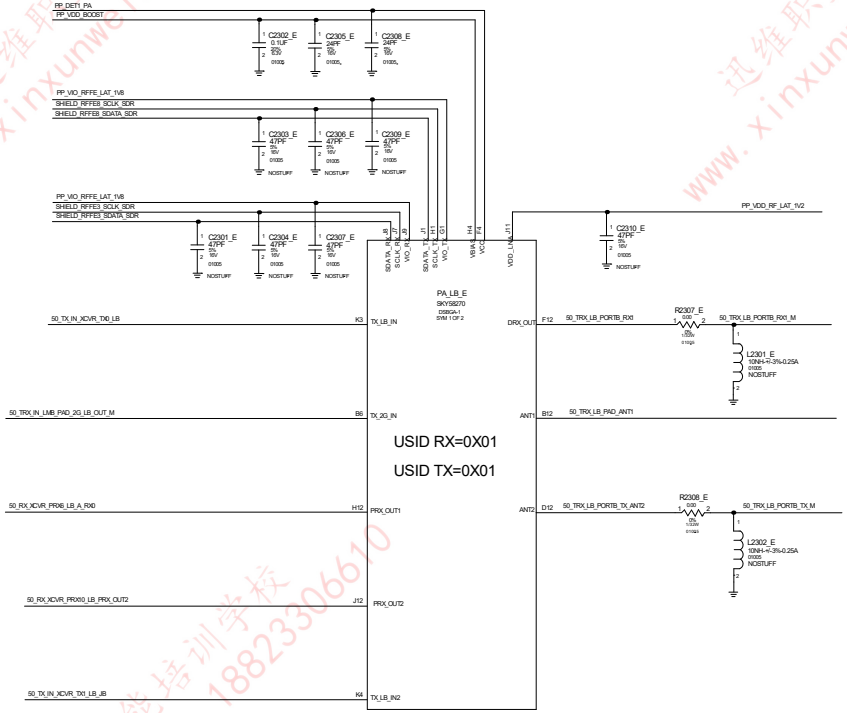

迅维职业技能培训学校 www.xinxunwei.com 18823306610

Number124

鑫智造图纸
XZZ drawing

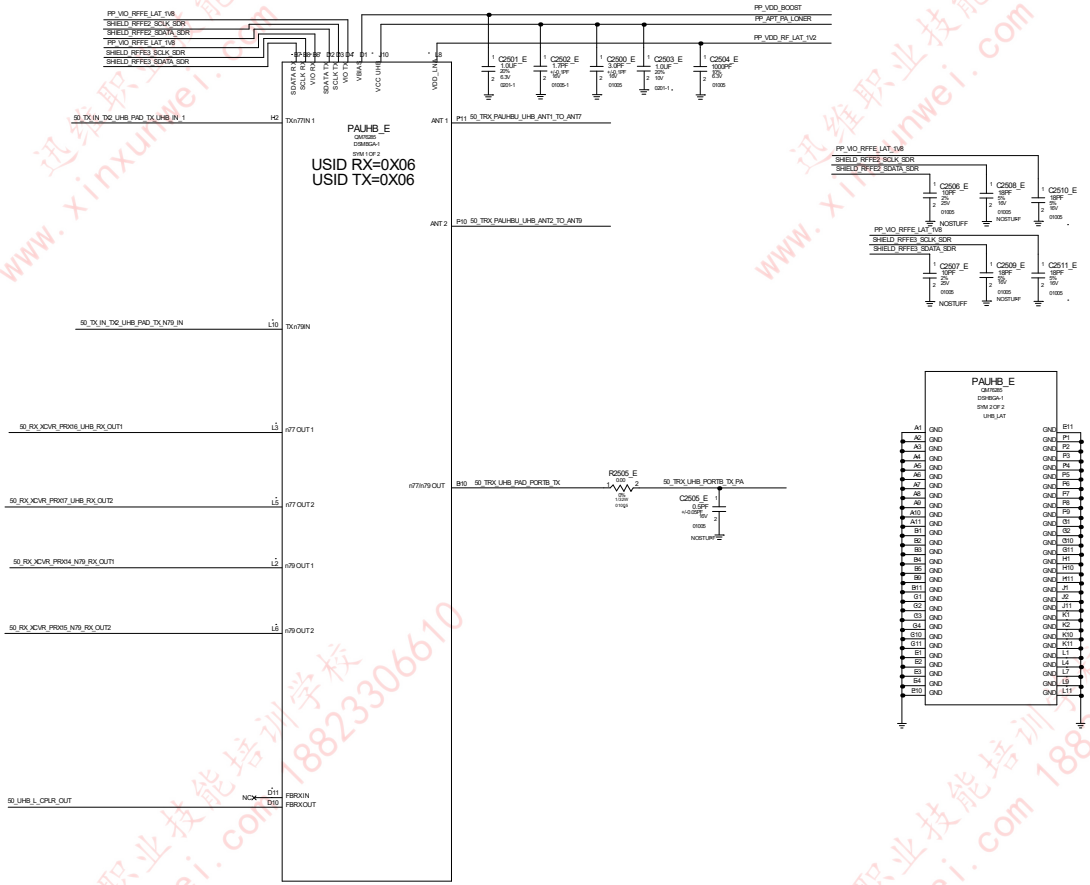

迅维职业技能培训学校 www.xinxunwei.com 18823306610

Number125

鑫智造图纸
XZZ drawing

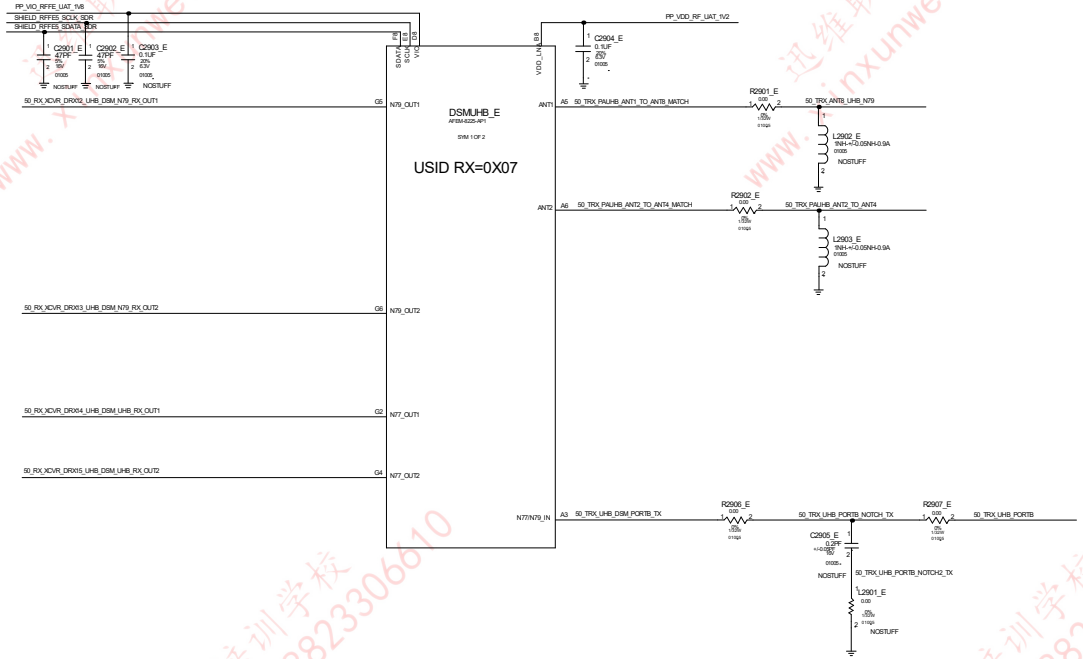

Number 126

鑫智造图纸
XZZ drawing

迅维职业技能培训学校 www.xinxunwei.com 18823306610

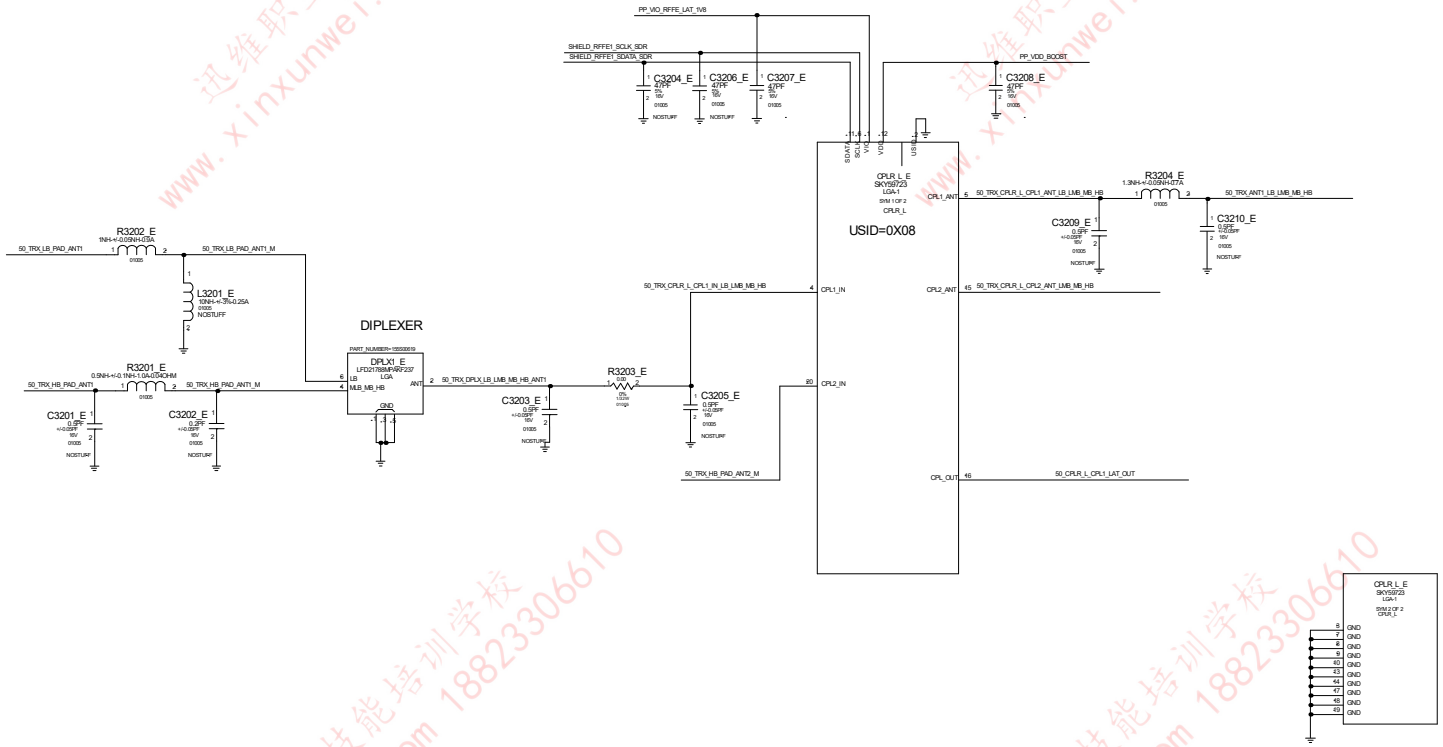

迅维职业技能培训学校
www.xinxunwei.com 18823306610

Number 127

鑫智造图纸
XZZ drawing

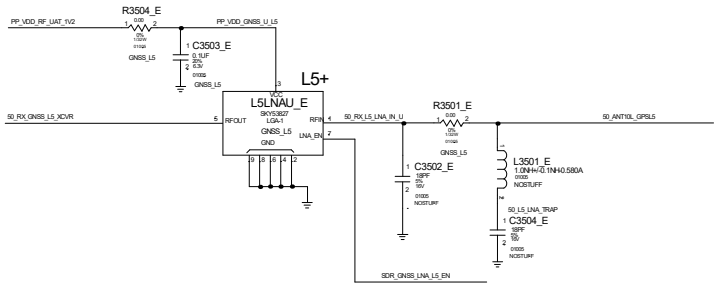

迅维职业技能培训学校
www.xinxunwei.com 18823306610

Number 128

鑫智造图纸
XZZ drawing

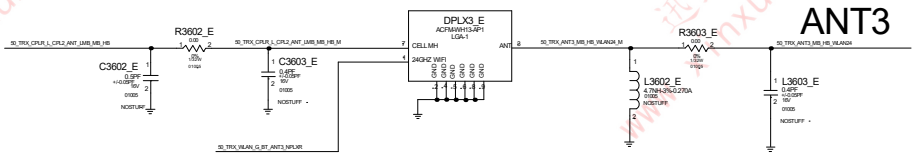

迅维职业技能培训学校
www.xinxunwei.com 18823306610

Number 129

鑫智造图纸
XZZ drawing

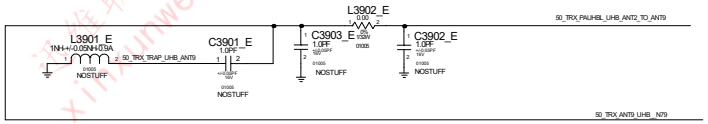

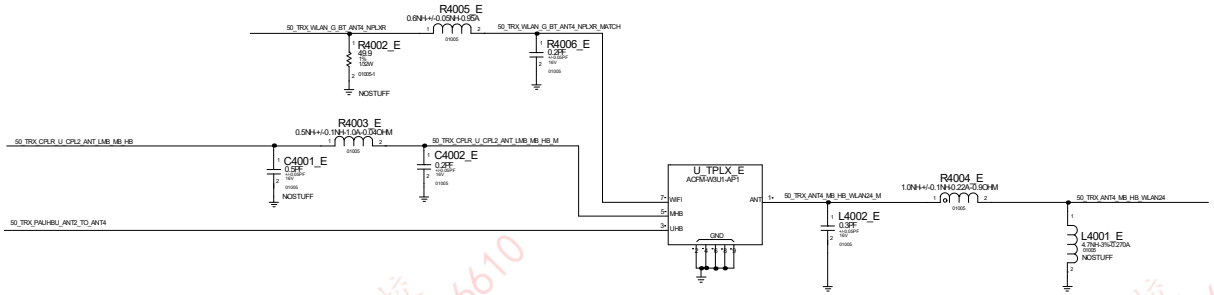

Number	130
鑫智造图纸 XZZ drawing	

迅维职业技能培训学校 www.xinxunwei.com 18823306610

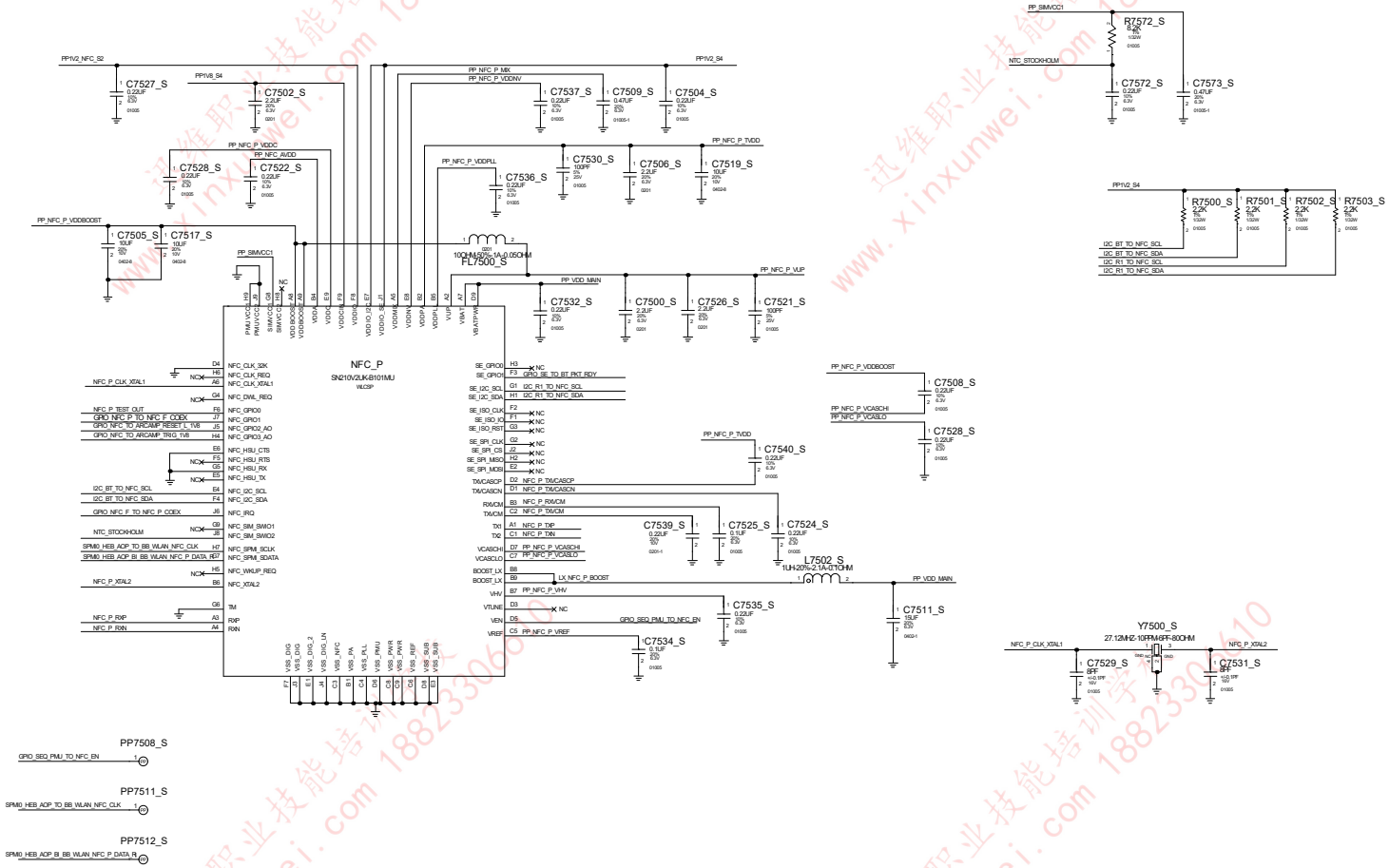

迅维职业技能培训学校 www.xinxunwei.com 18823306610

Number	131

鑫智造图纸
XZZ drawing

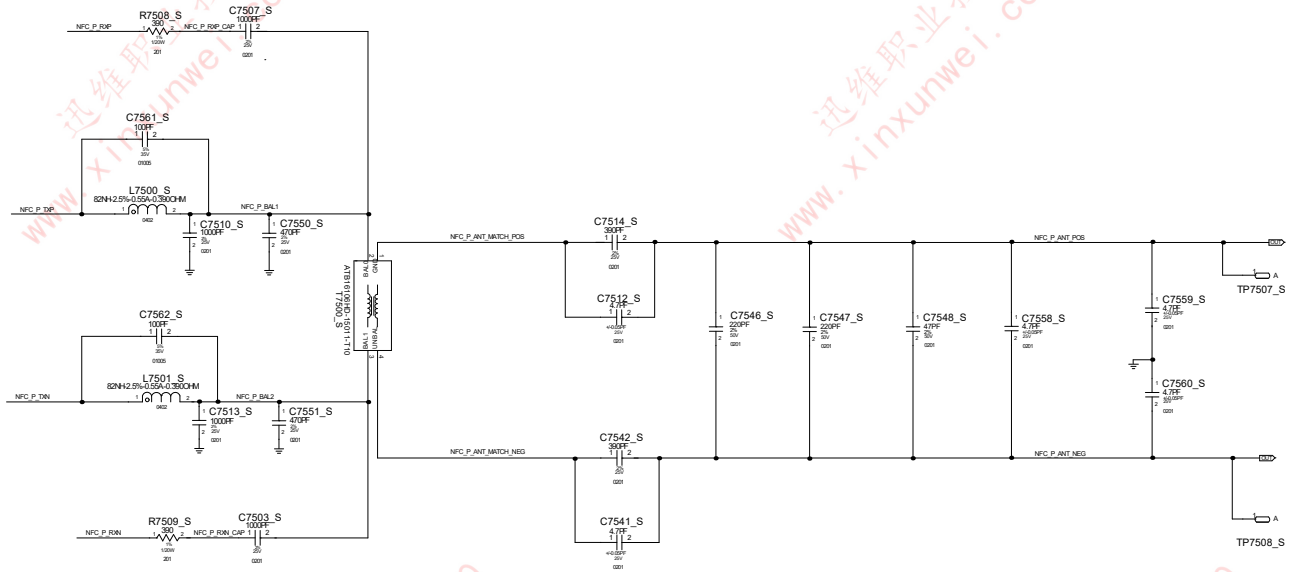

迅维职业技能培训学校
www.xinxunwei.com 18823306610

Number 132

鑫智造图纸
XZZ drawing

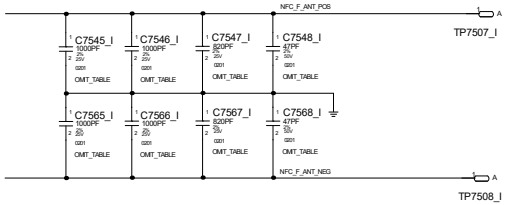

迅维职业技能培训学校
www.xinxunwei.com 18823306610

Number 133

鑫智造图纸
XZZ drawing