iPhone 15 Pro Max (A17) FPC Layer

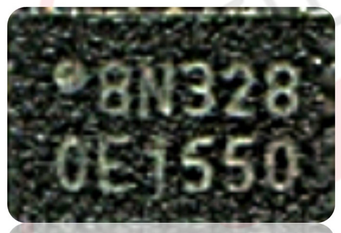

USB-C MULTIPLEX
SPI NOR FLASH
- No Touch
- No PC Comms
- Audio Issues

NAND STORAGE
- No Boot
- Apple Logo Reboot
- No PC Comms
- Error 9/40/4014
- DFU Mode

LOGIC EEPROM
- No Boot
- Apple Logo Reboot
- Data Recovery

FACE ID - DRIVER

SPKR AMP/JUAT
- Cannot Hear Caller
- No Service

ALS/COMPASS
- Compass
- Earpiece
- ALS
- Proximity
- Face ID

IR CAM
DOT PROJECTOR
FLOOD
- No Face ID

CAM 3V3 SUPPLY

AUDIO CODEC

WIFI 5GHZ - PA

LOWER ANTENNA – JLAT
- No Service
- Internet
- Calls

DISPLAY/TOUCH
- Touch
- Display - AMOLED
- Reboots

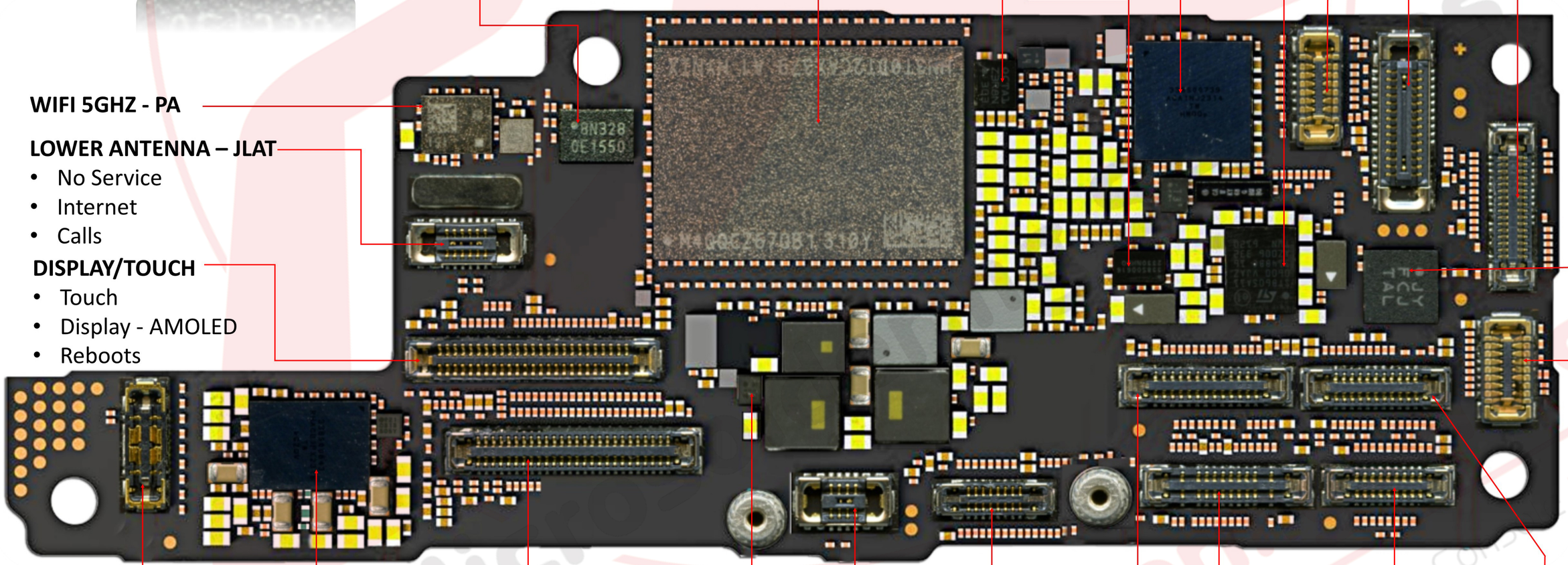

GYRO

FRONT-CAM
- Paired
- Reboot

SUPER WIDE-CAM
- No Boot

LiDAR SCANNER

MULTIPLEX iD
USB-C

BATTERY

BOOST MODULE

DOCK CONNECTOR
- Charging
- Mic Calls
- Sound
- Vibrate
- USB-C Hi Speed TX/RX
- Thunderbolt Display
- Fast Charging PD
- Reboot
- PC Comms
- Sensors

JUAT 2
NFC

TELE-CAM

PWR BTN/ WIRELESS CHARGING
- Power ON
- Volume/Mute
- Wireless Charger
- Reboots

WIDE-CAM

iPhone 15 Pro Max (A17) AP Layer

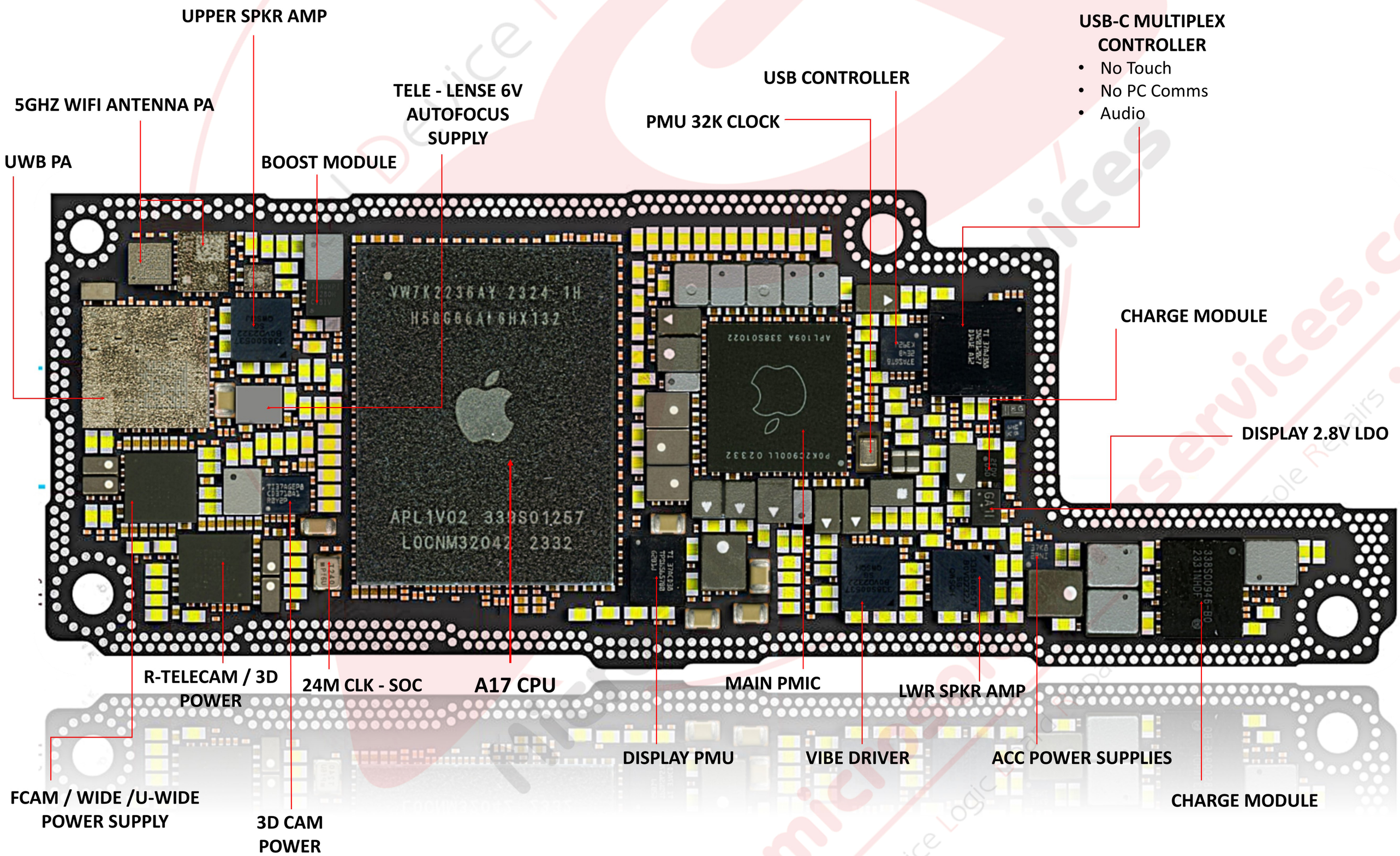

iPhone 15 Pro Max (A17) RF Layer

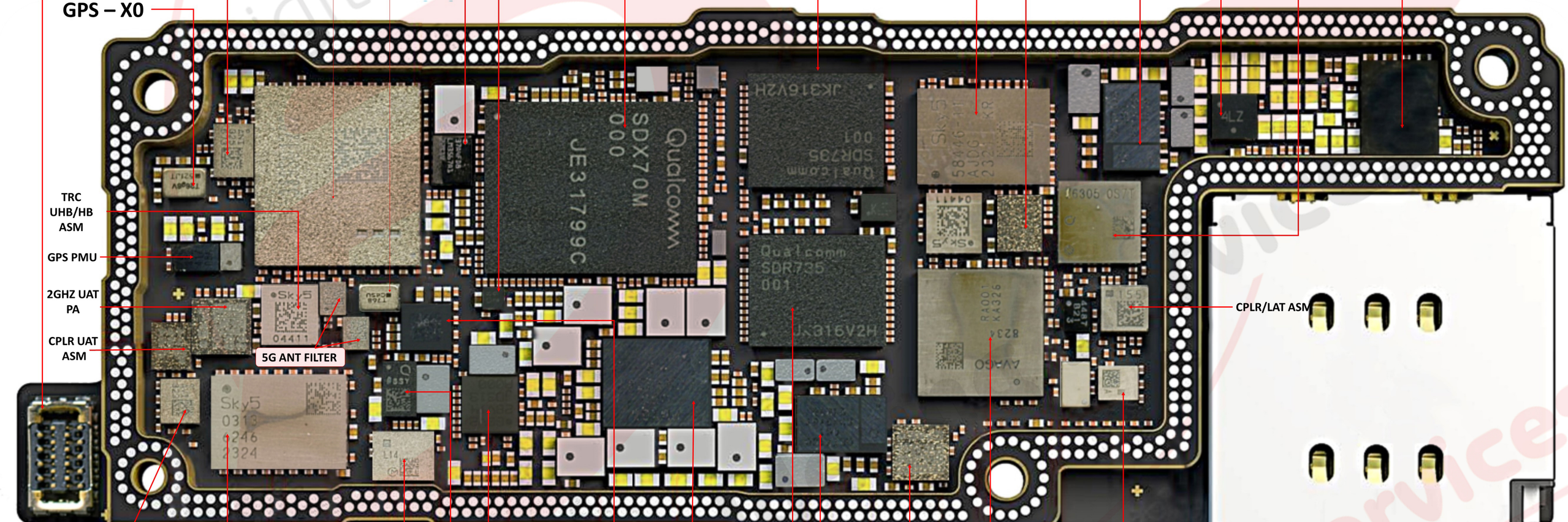

iPhone 15 Pro Max (A17) SPI NoR Flash

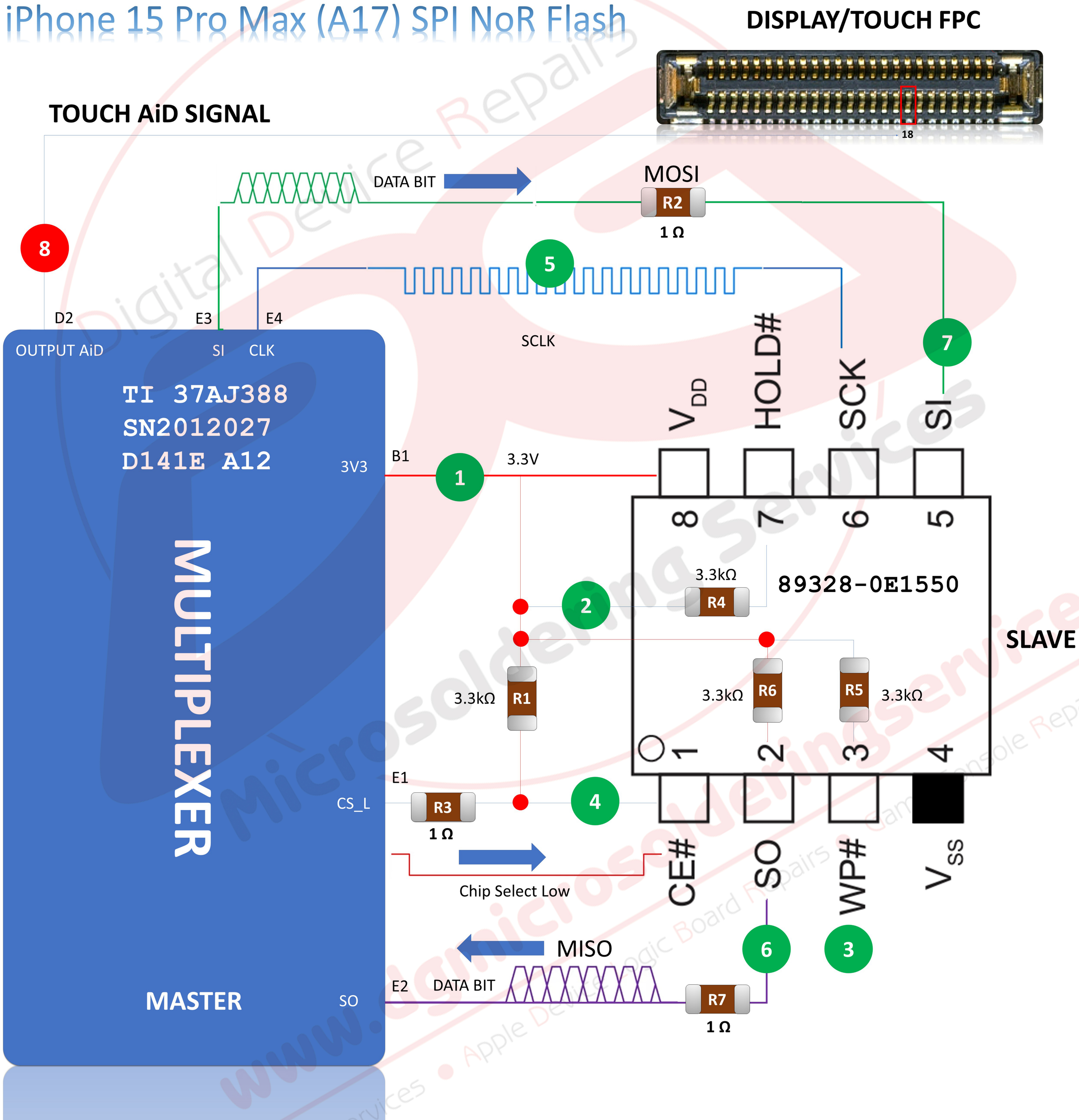

iPhone 15 Pro Max (A17) FPC Layer

FCAM

603	515	491	370	500	0	0L	OL	0
603	OL	531	432	432	0	OL	OL	0

DISPLAY CONNECTOR

0	623	485	486	335	336	325	294	635	601	336	336	337	337	337	0	0L	0L	0	0L	0L	0	266	520	0	0L	540
0	268	874	0	580	335	340	334	334	562	335	336	730	335	420	510	0	0L	0L	0	0L	0L	0	485	0L	0L	540

UAT-RX

*0	340	0	0	0	0L	0L	0L	0L	0	42	0	640	485	655	0
0	0L	0	485	0	720	721	568	569	565	565	0	697	695	695	0

LOWER ANT

*0	0L	0	495	494	0	340	0
0	0	0	0	25	0	24	0

PROX FLEX

*0	431	432	750	638	335	336	0
0	296	334	333	334	335	334	0

BATT CONN

*0	565	394	501	0
0	447	0	0L	0

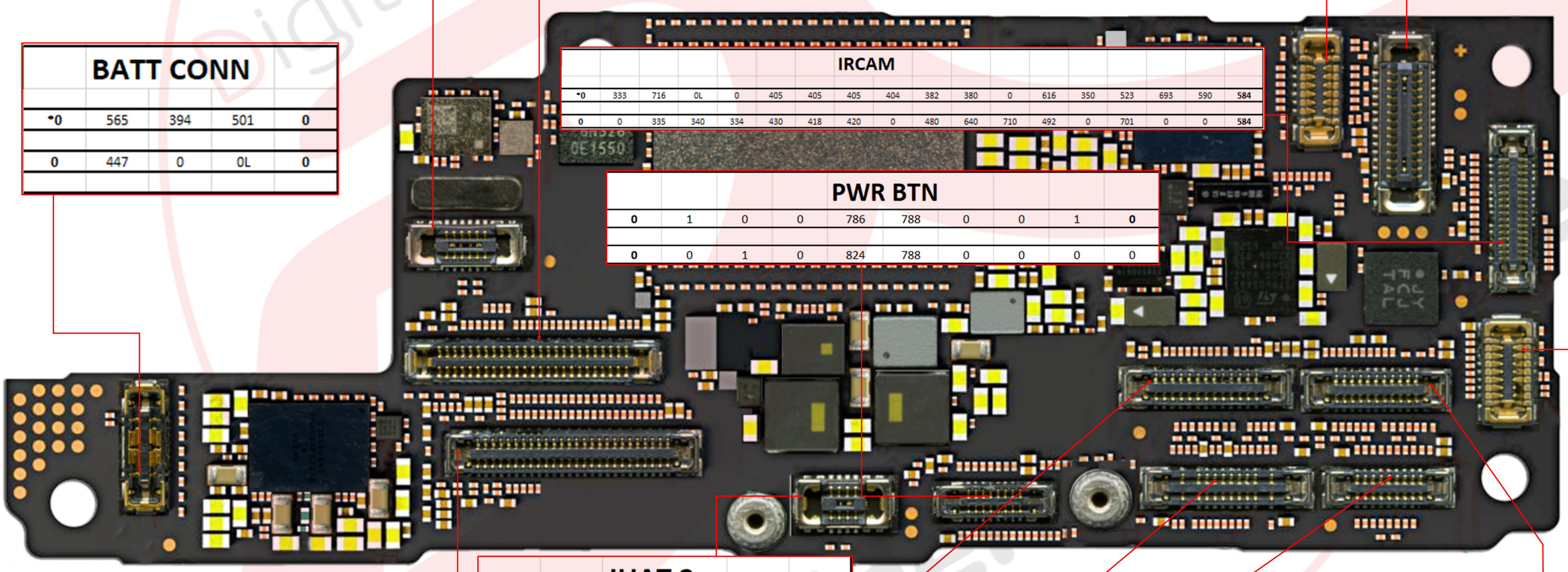

IRCAM

*0	333	716	0L	0	405	405	405	404	382	380	0	616	350	523	693	590	584
0	0	335	340	334	430	418	420	0	480	640	710	492	0	701	0	0	584

PWR BTN

0	1	0	0	786	788	0	0	1	0
0	0	1	0	824	788	0	0	0	0

JUAT 2

0	1	0	486	0	0
0	0L	0L	0L	0L	0

LIDAR

0	595	0	0L	0L	0	446	0L	485	520	0L	0
0	405	407	369	585	527	487	0	485	564	440	0

SUPER WIDE

0	0L	0L	0	0L	0L	0	523	512	430	490	490	0
0	600	605	0	0L	0L	0	0L	420	420	370	536	0

TELE CAM

0	0L	0L	0	0L	0L	0	0L	0L	0	0L	0L	0	0L	0
0	543	546	370	426	430	0	486	490	532	435	510	367	367	0

WIDE CAM

375	0	0L	0L	0	OL	0L	0	490	490	0
375	512	430	0	510	0L	420	421	371	536	0

DOCK CONNECTOR

0	320	320	0	280	280	0	290	0	280	280	0	320	320	0	760	761	761	750	0	510	752	290	0L	560	720	560	720	1673
0	546	545	634	330	332	332	655	680	665	695	740	742	645	660	671	670	660	696	336	430	430	431	431	721	560	561	721	1673

Microsoldering Service
Digital Device Repairs
Game Consoles
Logic Board Repairs