SCHEMATIC,MAIN,84350_1_15

File: 001.84350_1_15		REV: V10
DOCUMENT NO.: S84350_1_16_20220216_0859		Size: Custom
DEPARTMENT: RS	DESIGNER: Fenghongzhi	
WINGTECH		
Date: Tuesday, February 15, 2022	Sheet 1 of 152	

Revision History

REV	DESCRIPTION
A	

Board Change History

SCHEMATIC MCN	HW VERSION	REVISION	DESCRIPTION OF CHANGE

REVISION HISTORY2

Title	002.REVISION HISTORY2	REV: V10
DOCUMENT NO.:	SB4356_1_16_20220216_0959	Size: Custom
DEPARTMENT:	BB	DESIGNER: Fenglongzhi
WINGTECH		
Date:	Monday, December 06, 2021	Sheet 2 of 152

BLOCK DIAGRAM

Title: 004.BLOCK DIAGRAM		REV: V10
DOCUMENT NO.: SB4350_1_10_20220216_0959		Size: Custom
DEPARTMENT: BB	DESIGNER: Ringotmo	
WINGTECH		
Date: Monday, December 06, 2021	Sheet 4 of 152	

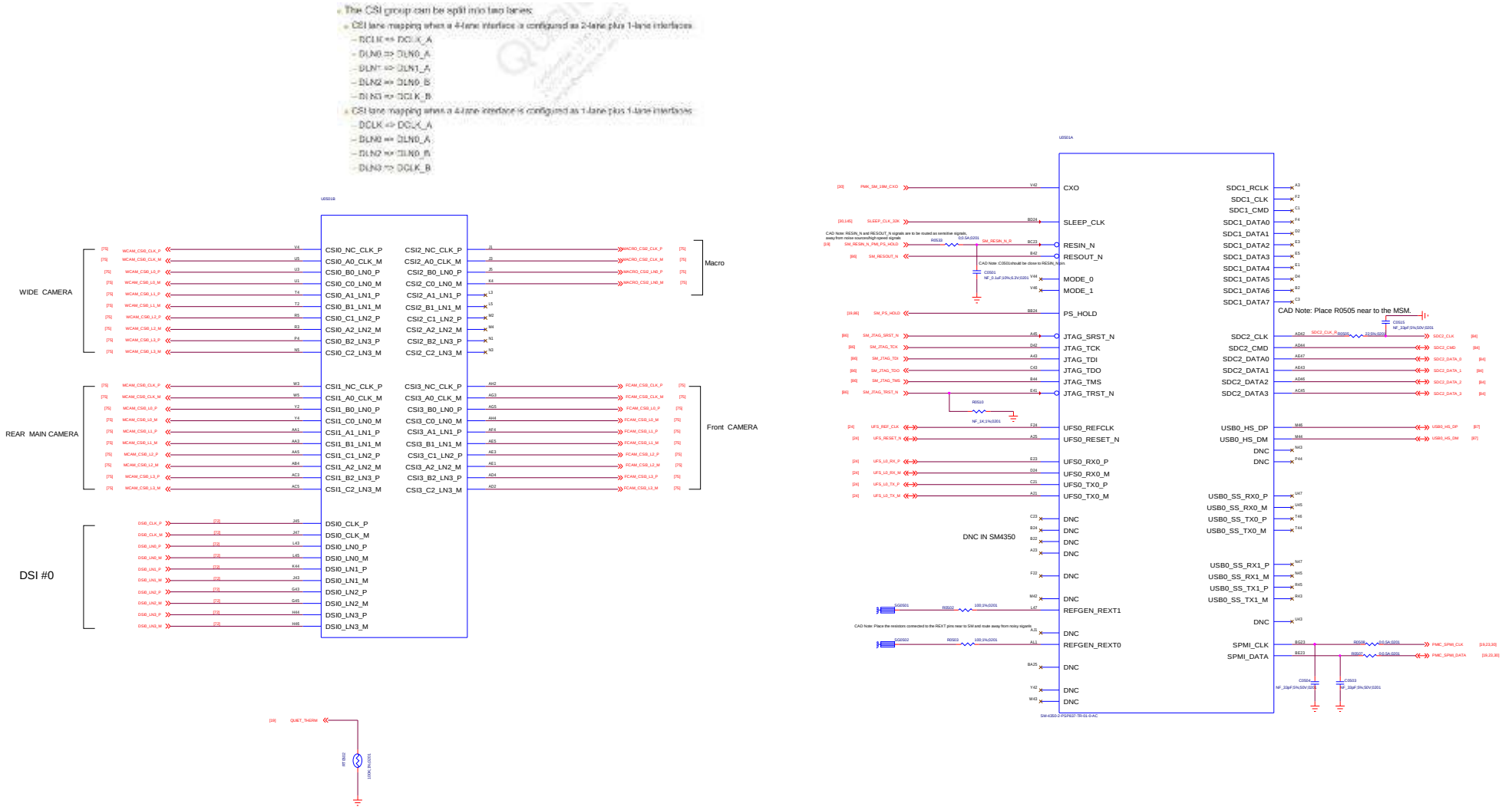

SM4350_Control_CSI_DSI

Title	005.SM4350_CONTROL_CSI_DSI	REV: V10
DOCUMENT NO.:	SM4350_1_16_20220316_0958	Size: Custom
DEPARTMENT:	SB	DESIGNER: Ningxiao
Date:	Monday, December 06, 2021	Sheet 6 of 152

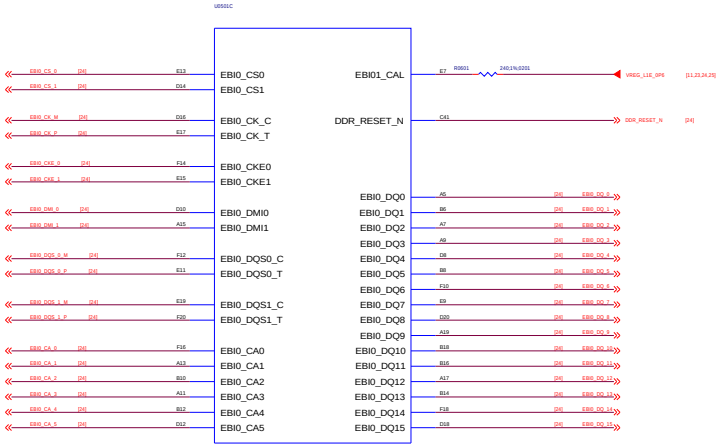

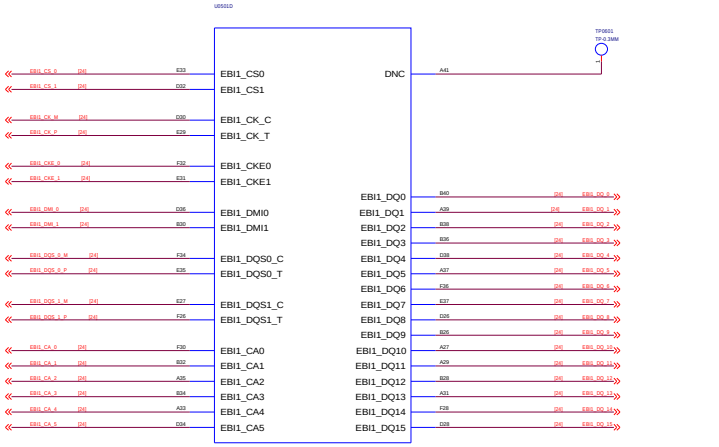

SM6350_LPDDR4x

Title: 006.SM4350 LPDDR4x			REV: V10
DOCUMENT NO.: SM4350_1_16_20220216_0959			Size: Custom
DEPARTMENT: BB		DESIGNER: Ningsimei	
WINGTECH			
Date: Monday, December 06, 2021	Sheet 6 of 152		

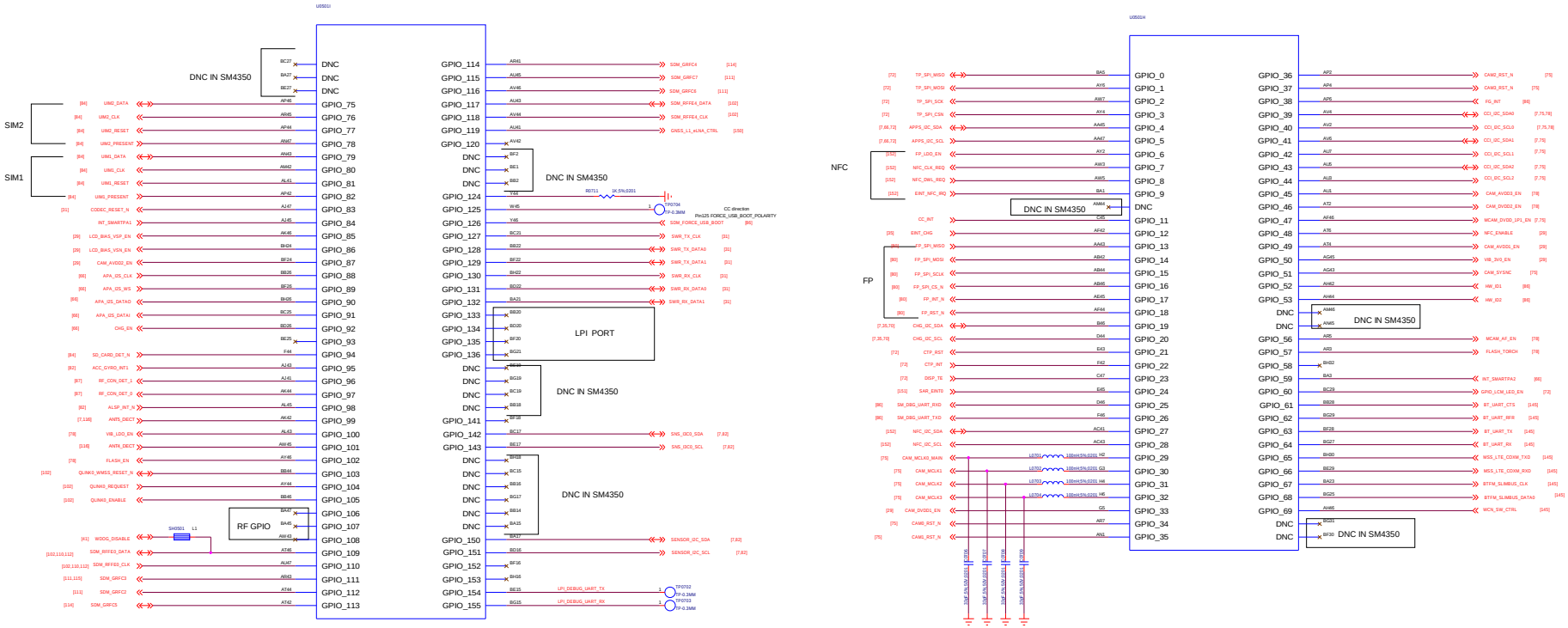

Audio PA \ Backlight\ LCD bias\SAR

M Sensor\ PS&ALS

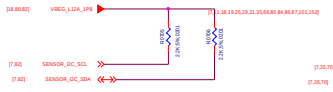

Charging IC\Fuelgauge \CC

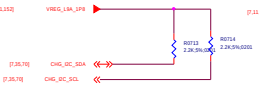

CAM WIDE\CAM MACRO

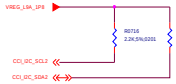

FlashDriver\Front CAM

MAIN CAM

A+G Sensor I3C

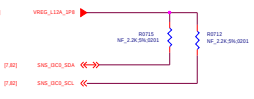

Title	007.SM4350_GPIO	REV: V10
DOCUMENT NO.:	SM4350_1_16_20220218_0059	Size: Custom
DEPARTMENT:	SB	DESIGNER: Wingxinwu
WINGTECH		
Date: Tuesday, December 21, 2021	Sheet 7 of 152	

SM6350: GPIO

CAD NOTE: Keep the resistors on the MSM REXT pins near to MSM and away from noisy signals.

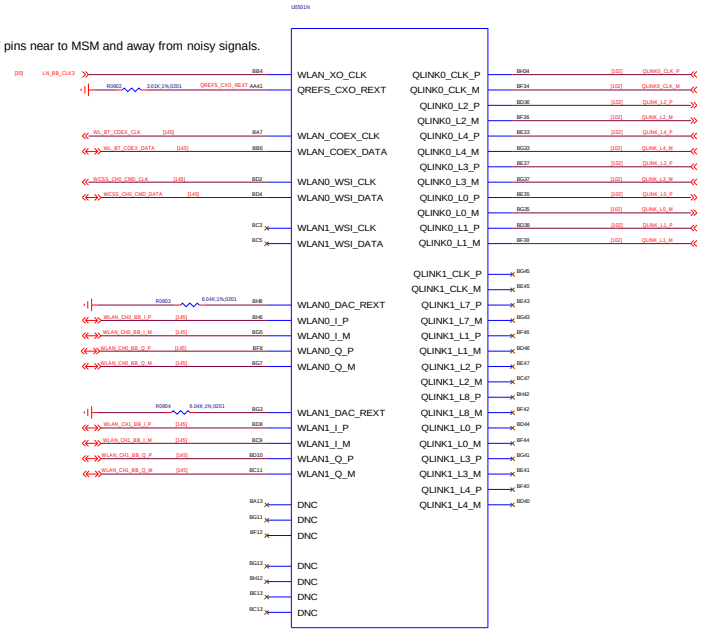

SM6350_WLAN/Qlink

Title: 008.SM4350_WLAN_QLINK		REV: V10
DOCUMENT NO.: SM350_1_16_20230216_0059		Size: Custom
DEPARTMENT: BB	DESIGNER: Mingximou	
WINGTECH		
Date: Monday, December 06, 2021	Sheet 8 of 152	

PM6350 FTS Bucks

For LP4x VDD2

VDD_GFX

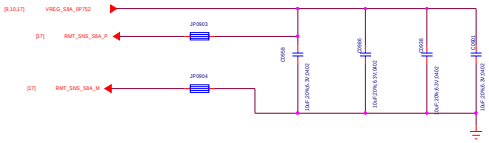

VDD_GFX

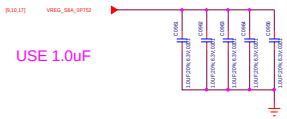

VDD_MX

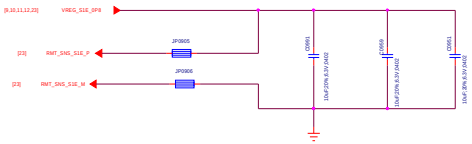

VDD_MX

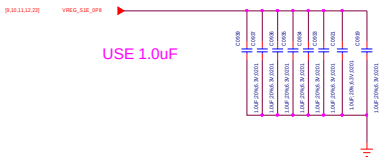

SM4350_Power Capacitor

PM6150A FTS Bucks

VDD_CX

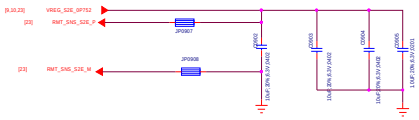

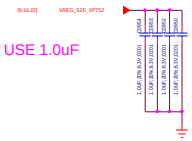

VDD_APC0

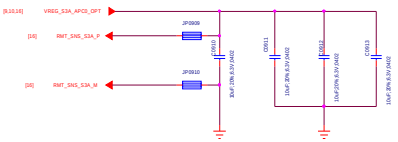

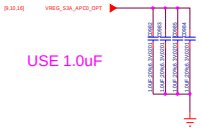

VDD_APC1

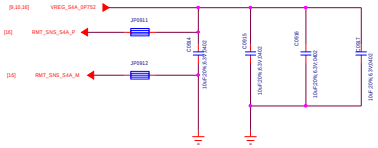

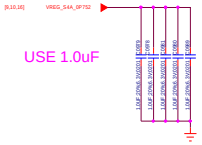

VDD_MODEM

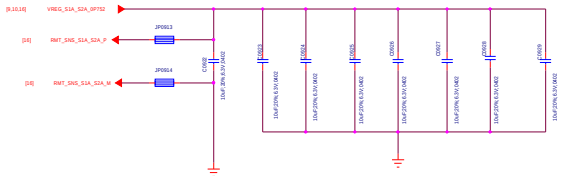

Title	009.SM4350_Power Capacitor	REV: V10	
DOCUMENT NO.:	SM4350_1_16_20220216_0959	Size: Custom	
DEPARTMENT:	RB	DESIGNER:	Ningchao
Date:	Monday, December 06, 2021	Sheet 9 of 152	

WINGTECH

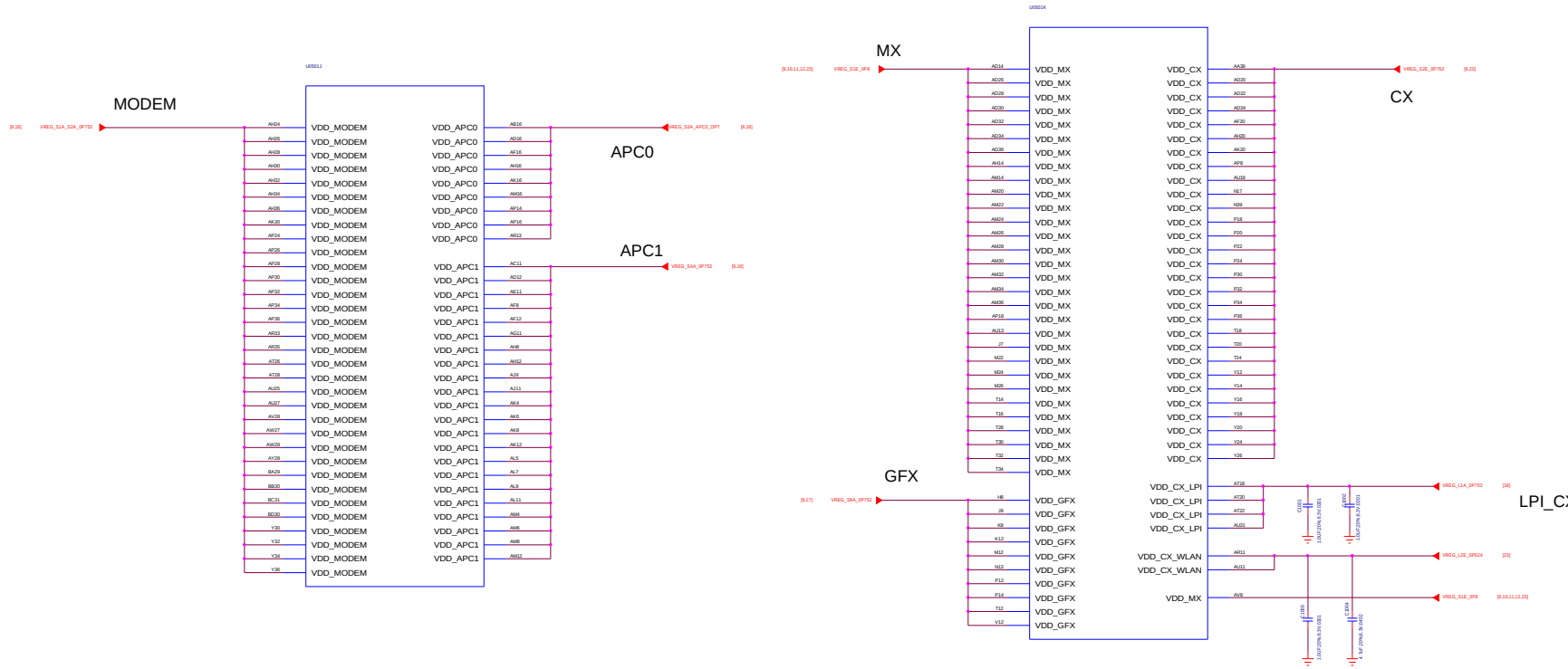

SM6350_Power1 of 3

Title	010.SM4350_ POWER 1	REV: V10
DOCUMENT NO.:	SM4350_1_16_20220216_0909	Size: Custom
DEPARTMENT:	BB	DESIGNER: Ningzimeo
Date:	Monday, December 06, 2021	Sheet 10 of 152

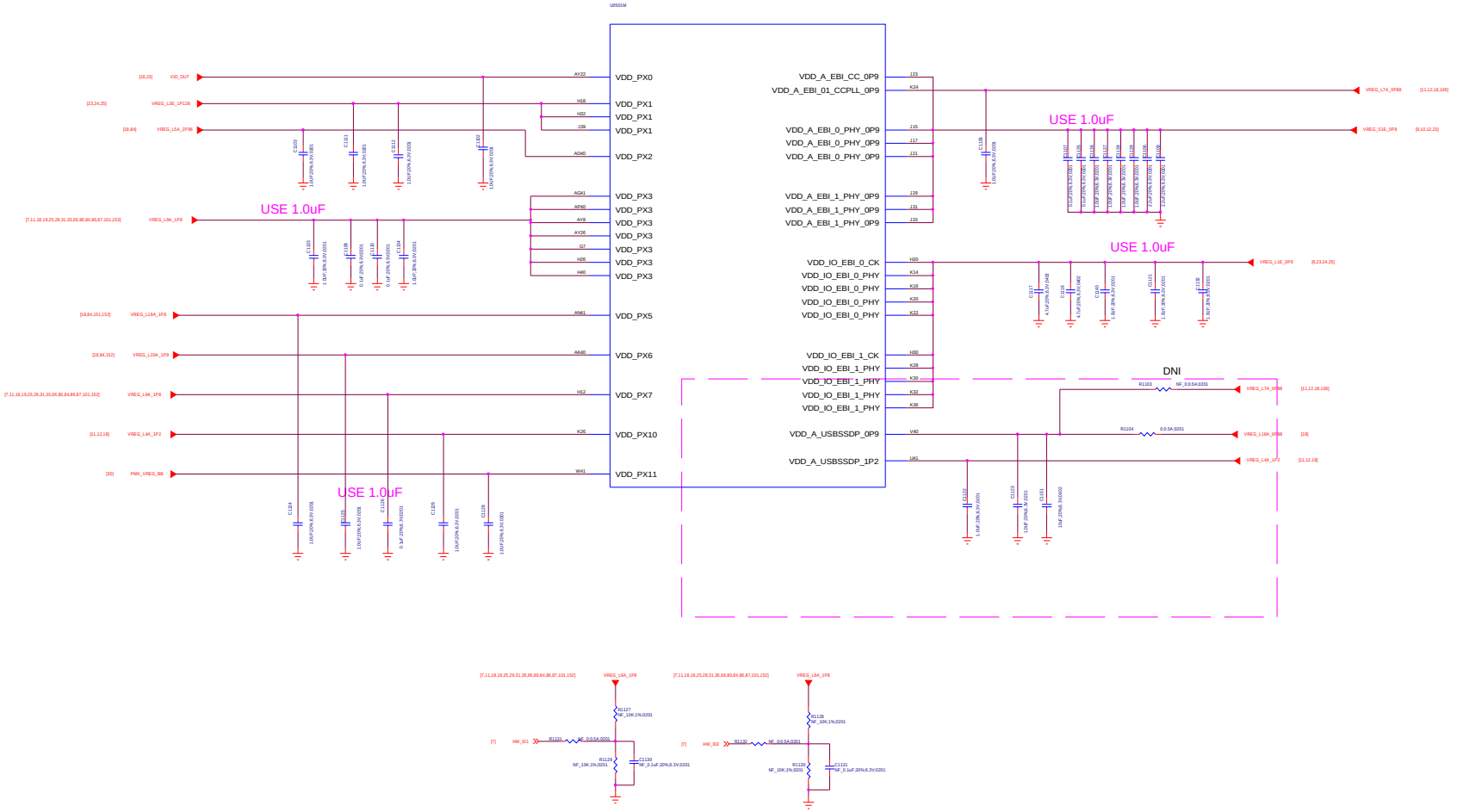

SM6350_Power2 of 3

Title:	011.SM4350 POWER2		REV: V10
DOCUMENT NO.:	SM4350_1_16_20230218_0959		Size: Custom
DEPARTMENT:	BB	DESIGNER:	Ningmeiwu
Date:	Monday, December 06, 2021	Sheet	11 of 152

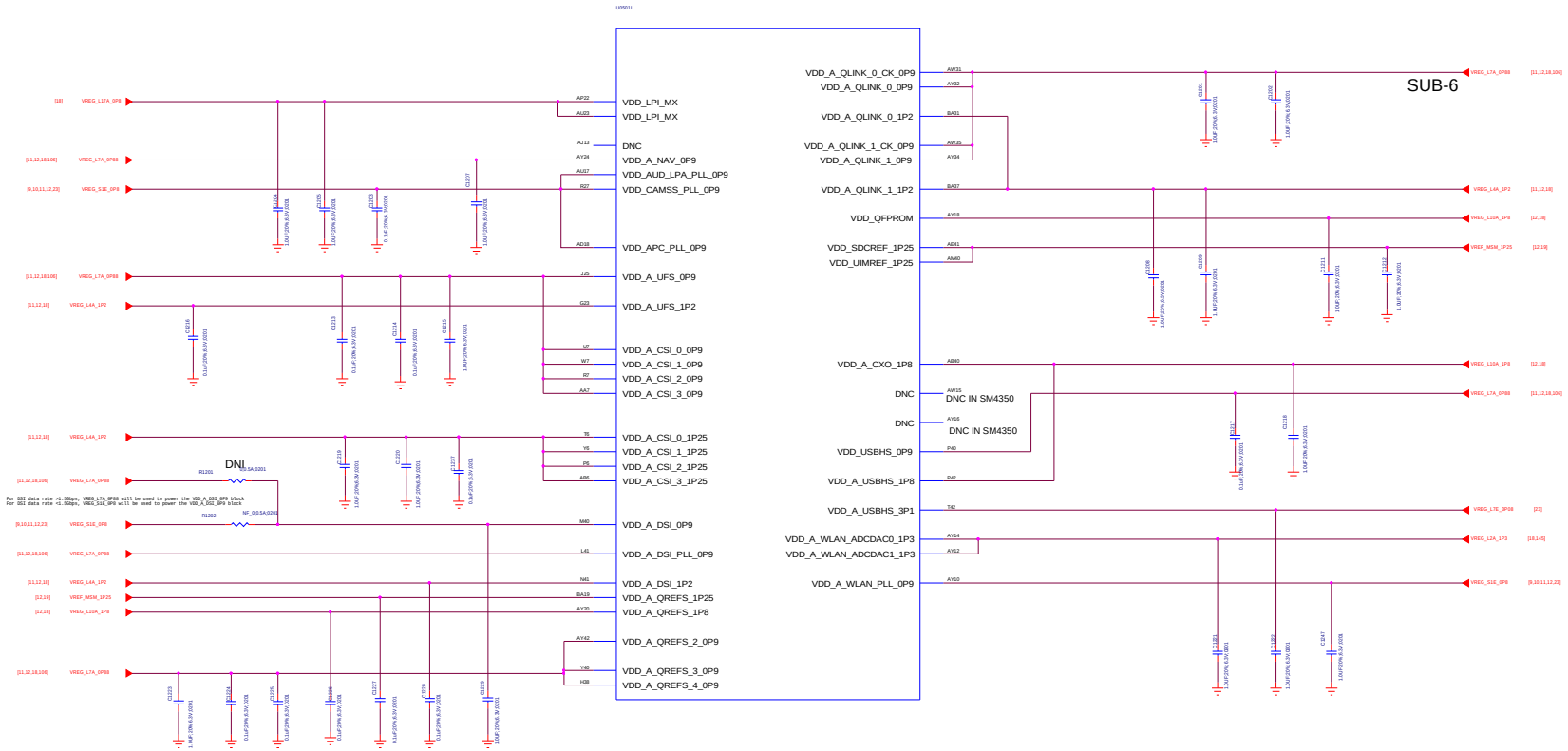

SM6350_Power3 of 3

Title	012.SM4350_POWER3	REV: V10	
DOCUMENT NO.:	SM4350_3_16_20220216_0909	Size	Custom
DEPARTMENT:	BB	DESIGNER:	Ningxinwu
WINGTECH			
Date:	Monday, December 06, 2021	Sheet	12 of 152

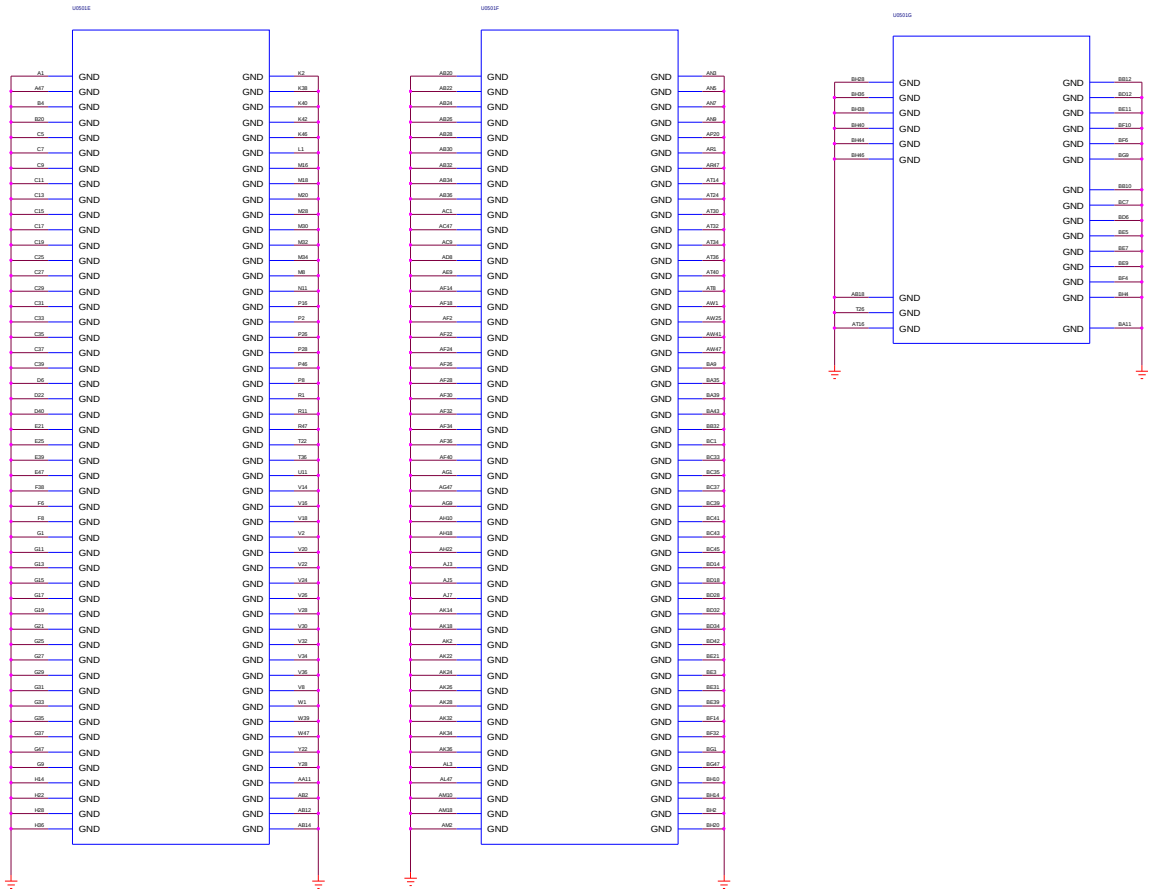

SM6350_Ground

Title: 013.SM4350_GROUND		REV: V10
DOCUMENT NO.: SM4350_1_10_20220216_0050		Size: Custom
DEPARTMENT: SS	DESIGNER: Ningpinwu	
WINGTECH		
Date: Monday, December 06, 2021	Sheet 13 of 152	

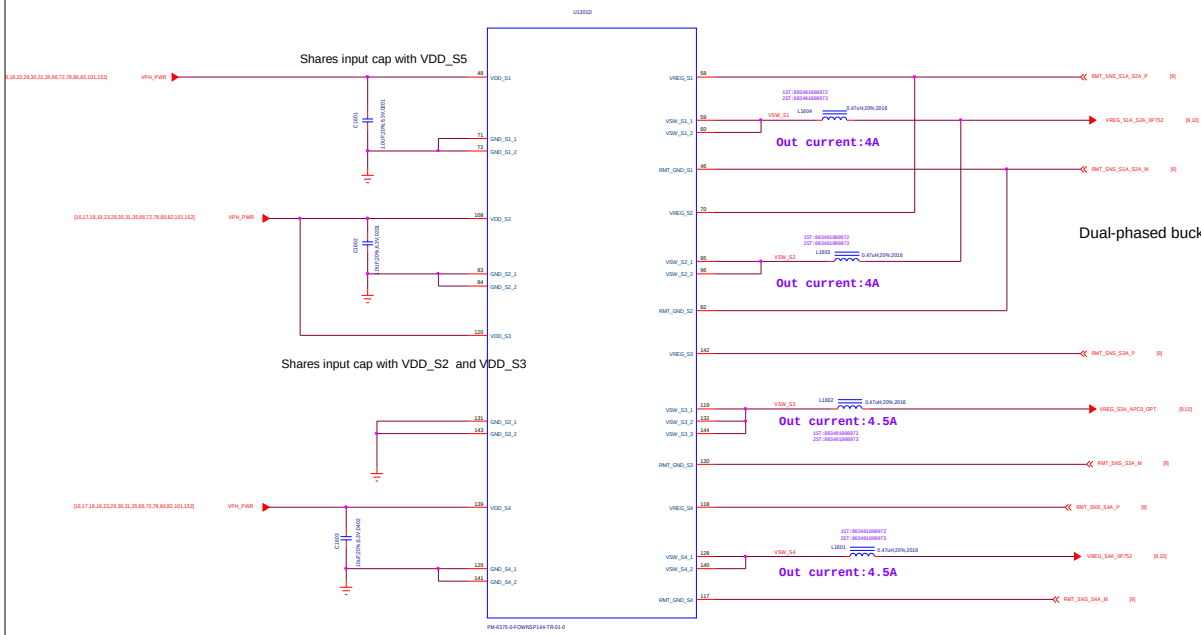

Dual-phased buck

Diff Pair back to PMIC from load cap

VREG_S1A is REMOTE diff sense,
VREG_Sx & RMT_GND_Sx should be routed as a differential pair
Do not route VREG_Sx & RMT_GND_Sx near VIN_Sx
Do not route VREG_Sx & RMT_GND_Sx near VSW_Sx unless separated by ground shield

VREG_S2A is REMOTE diff sense,

VREG_Sx & RMT_GND_Sx should be routed as a differential pair
Do not route VREG_Sx & RMT_GND_Sx near VIN_Sx
Do not route VREG_Sx & RMT_GND_Sx near VSW_Sx unless separated by ground shield

Dual-phased buck

VREG_S3A is REMOTE diff sense,
VREG_Sx & RMT_GND_Sx should be routed as a differential pair
Do not route VREG_Sx & RMT_GND_Sx near VIN_Sx
Do not route VREG_Sx & RMT_GND_Sx near VSW_Sx unless separated by ground shield

Diff Pair back to PMIC from load cap

VREG_S4A is REMOTE diff sense,
VREG_Sx & RMT_GND_Sx should be routed as a differential pair
Do not route VREG_Sx & RMT_GND_Sx near VIN_Sx
Do not route VREG_Sx & RMT_GND_Sx near VSW_Sx unless separated by ground shield

Place Cin as close to PMIC as possible to achieve this requirement.

Loop inductance from (VIN_Sx to Cin + Cin to GND_Sx) must be < 3nH

S1A-2A:	FTS510	0.8V default	8000mA Ipeak 8110.00mA	APC
S3A-4A:	FTS510	0.8V default	8000mA Ipeak 8480mA	CX, MODEM
S5A:	HFS510	0.912V default	4000mA Ipeak 3620.00mA	EBI, MX, nLDO
S6A:	HFS510	1.352V default	2000mA Ipeak 1560mA	LDO
S7A:	HFS510	2.04V default	2500mA Ipeak 2350mA	LDO
S8A:	FTS510	1.128V default	4000mA Ipeak 1790mA	LDO, LPDDR4x

PM6115_Bucks_S1-S4

Title	018.PMIC_PM6375_BUCKS1-S4	REV: V10	
DOCUMENT NO.:	S84350_1_16_20220216_0859	Size	Custom
DEPARTMENT:	BB	DESIGNER	Ningximou
Date:	Monday, December 06, 2021	Sheet	16 of 152

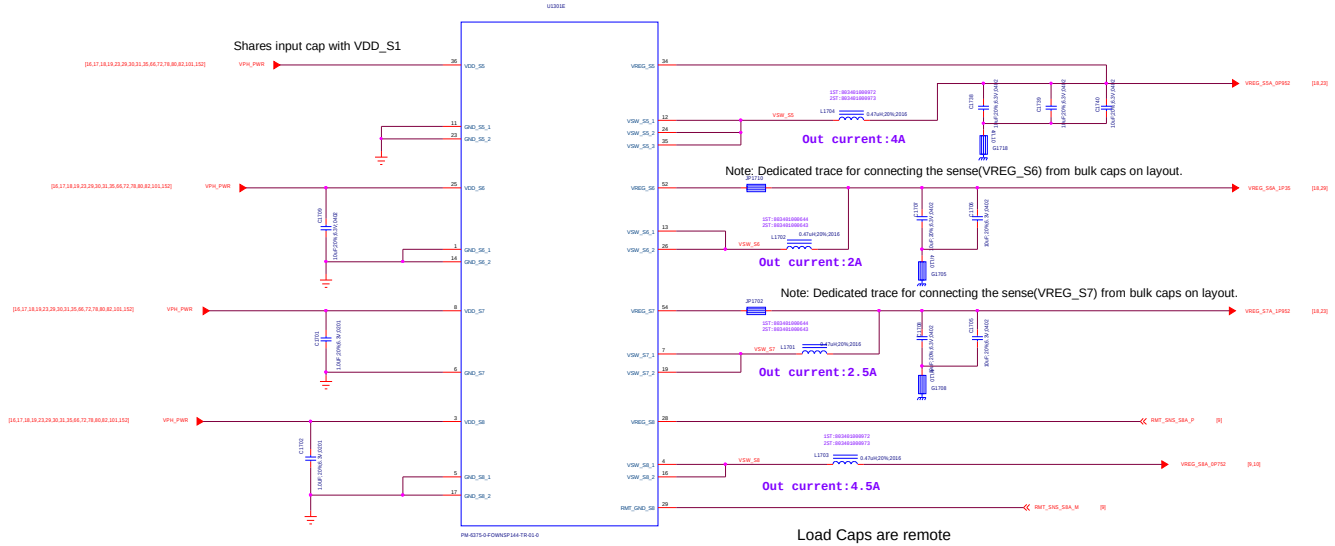

PM6125_Bucks_S5-S8

Title	017.PMIC_PM6375_BUCKS5-S8	REV:	V10
DOCUMENT NO.:	SM350_1_16_20220216_0959	Size	Custom
DEPARTMENT:	BB	DESIGNER:	hingxinwu
Date:	Monday, December 06, 2021	Sheet	17 of 152

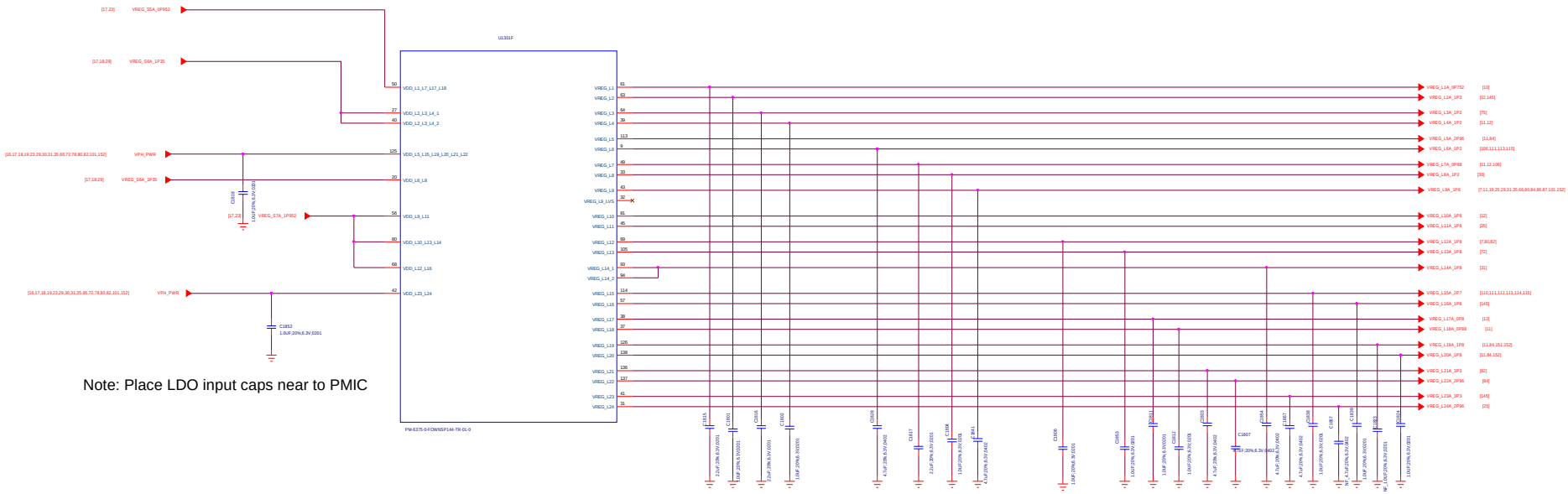

Note: Place LDO input caps near to PMIC

LDO L5/L9/L10/L11/L12/L13/L14/L15/L16/L19/L20/L21/L22/L23/L24 is the Pseudo-capless LDO, so can dni CAP in BOM

PSEUDO CAPLESS LDOs
P-type are psuedo-capless, cap can be at load
For CAPLESS LDOs: If decaps on the load side do not
add up to LDO spec, then install the cap close to the PMIC

Title: 018.PM6375_LDOS		REV: V10
DOCUMENT NO.: SB4350_3_16_20230210_0959		Size: Custom
DEPARTMENT: BB	DESIGNER: Ningxinwu	
WINGTECH		
Date: Thursday, December 23, 2021	Sheet 18 of 152	

Layout Note:
No trace shall be present in at-least two immediate layers below XTAL.

Route XTAL IN/OUT trace with
length between 3mm and 10mm

AVDD_BYP should be routed
away from noisy traces

Trace from pin to cap and ONE dedicated via from cap to main ground plane.
DCR < 200mOhm and ESL < 10nH
Do NOT connect to any other ground.

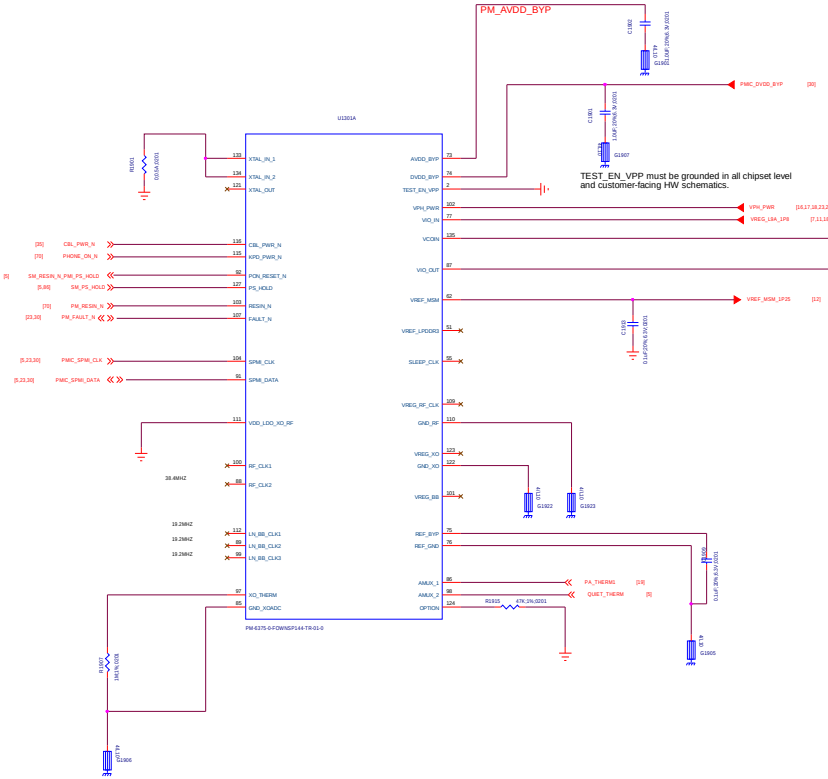

TEST_EN_VPP must be grounded in all chipset level
and customer-facing HW schematics.

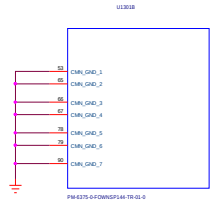

If RTC support is not needed when the battery is removed, a backup capacitor can be used on the VCOIN pin.
A ceramic capacitor with an effective capacitance of 10uF can support SMPL for up to 1 second.

Critical Layout Guidelines for VREF_RF (go/PmicLayoutChecklist)

Preferred: Short, dedicated route to VREG_RF cap,
away from noisy signals and dedicated via to main ground plane at cap or PMIC pin.

Acceptable: Dedicated via directly to main ground plane at the GND_CLKSXO pin
and at VREG_RF cap (without routing to cap).

Do NOT connect to any other ground.

Loop DCR must be <1000 m?.
Loop inductance must be <3 nH.

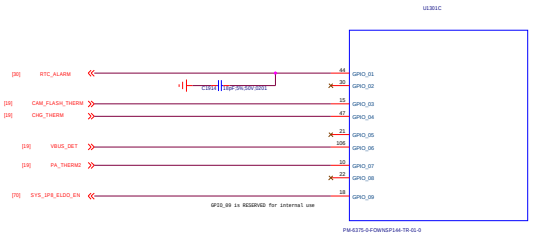

Placement/Layout Note:
VREG_RF Cout should be placed close to the PMIC
Can be prioritized over VREG_XO Cout placement

Short dedicated route to VREG_RF/XO cap
Dedicated via directly to main ground plane at the capacitor

Dedicated trace from REF_BYP to cap.
Dedicated trace from REF_GND to cap.
Dedicated via to main ground plane right under PMIC pin (REF_GND)
or as close to the pin as possible.

REF_BYP and REF_GND should be
routed away from noisy traces

DO NOT add via at cap.

SPMI_CLK & SPMI_DATA should be routed away from noisy traces
Route signals as a diff pair as much as possible

GND_XOADC
Skinny trace to XTAL components ground.
One dedicated via to main ground place as close to PMIC pin as possible

Critical Layout Guidelines for Clocks (go/PmicLayoutChecklist)
Coupling to any RFCLK or LNBBCLK output from each aggressor should be < 50 fF.
1. SMPS components (Buck, Boost, Charger)
2. VSW_Sx traces (Buck, Boost, Charger)
3. All other RFCLK, LNBBCLK
4. Any high speed digital signal
5. Any other noisy signals

PM6125_HK/IO

Title: 019.PM6375_HK_IO		REV: V10
DOCUMENT NO.: SB4350_1_16_20220218_0058		Size: Custom
DEPARTMENT: BB	DESIGNER: Ningmeu	
Date: Wednesday, December 22, 2021	Sheet 19 of 152	

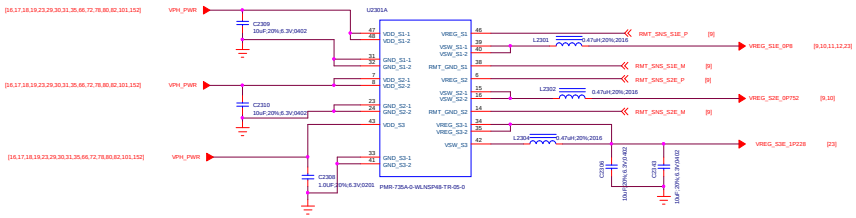

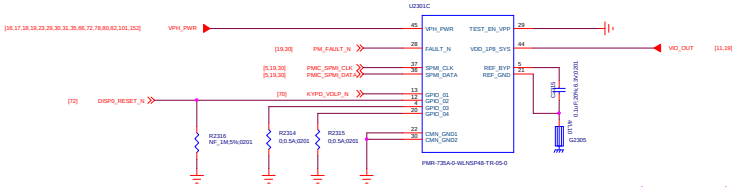

REF_BYP and REF_GND should be routed away from noisy traces

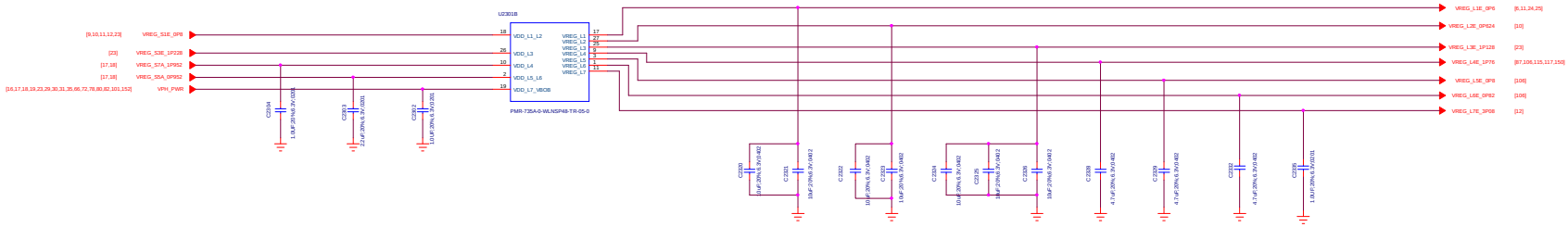

Title	023.PMR735A	REV:	V10
DOCUMENT NO.:	S84358_1_16_20230216_0059	Size	D
DEPARTMENT:	BB	DESIGNER:	Ningxinwu
Date :	Monday, December 06, 2021	Sheet	23 of 152

eMCP and UFS compatible design

CONFIDENTIAL AND PROPRIETARY - QUALCOMM TECHNOLOGIES, INC.
NOT TO BE USED, COPIED, REPRODUCED, OR MODIFIED IN WHOLE OR IN PART, NOR ITS CONTENTS REVEALED IN ANY MANNER TO OTHERS WITHOUT THE EXPRESS WRITTEN PERMISSION OF QUALCOMM TECHNOLOGIES, INC.
THIS TECHNICAL DATA MAY BE SUBJECT TO U.S. AND INTERNATIONAL EXPORT, RE-EXPORT, OR TRANSFER ("EXPORT") LAWS. DIVERSION CONTRARY TO U.S. AND INTERNATIONAL LAW IS STRICTLY PROHIBITED.

REVISIONS			
LTR	DESCRIPTION	DATE	APPROVED
A	INITIAL RELEASE		

Pls near to the memory

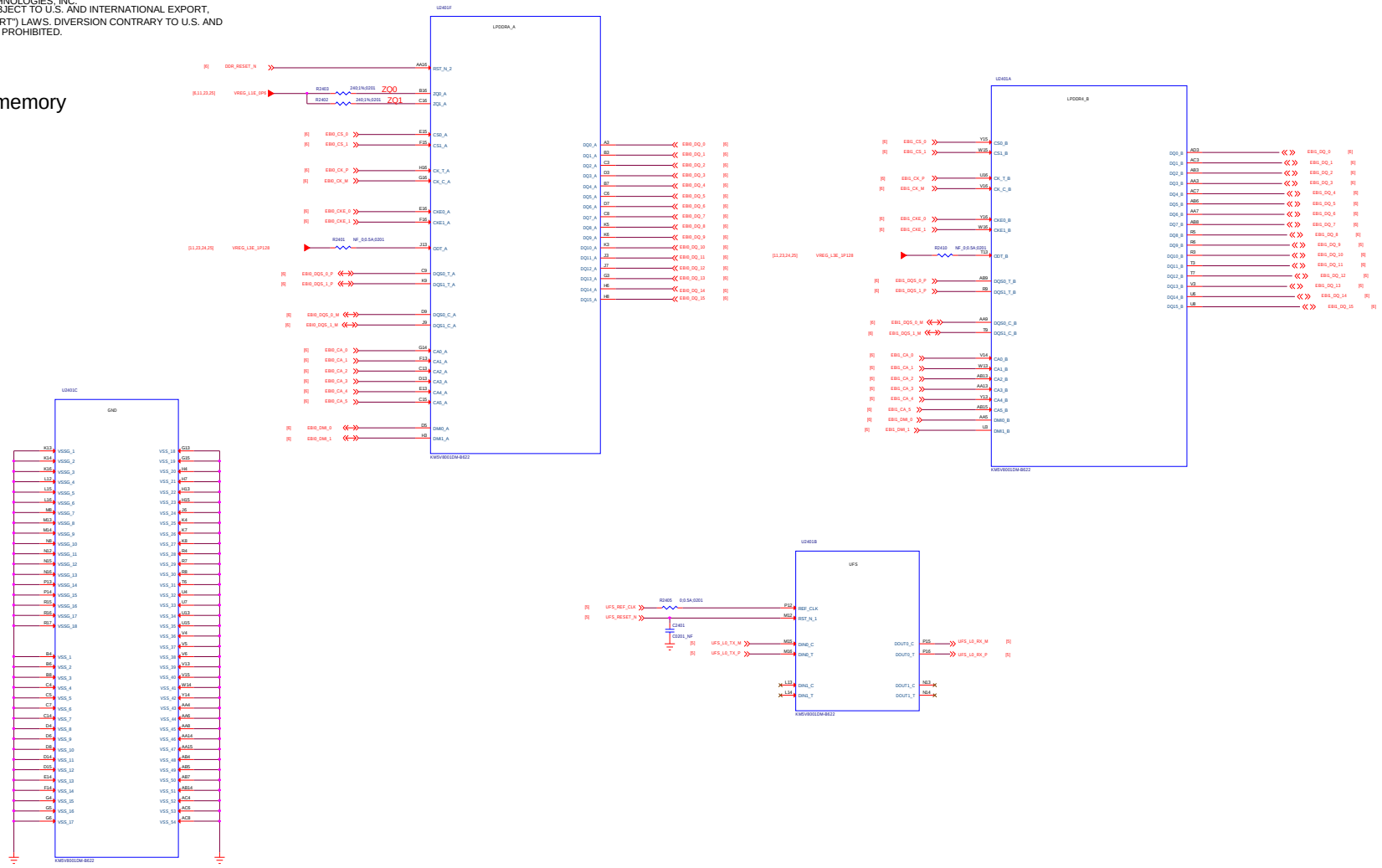

Pls use memory in PVL list

Title	Page Name = 024.uMCP	REV: V10	
DOCUMENT NO.:	Design Name = SB4350_1_16_20220216	8869	Custom
DEPARTMENT:		DESIGNER = zhangliaqiang	
Date:	Page Modify Date = Monday, December 04, 2006	Sheet 24 of 152	

VERSION	EDITED BY	LAST EDIT DATE
1	LAST_EDITOR	2-23-2007_10:06

CONFIDENTIAL AND PROPRIETARY - QUALCOMM TECHNOLOGIES, INC.
NOT TO BE USED, COPIED, REPRODUCED, OR MODIFIED IN WHOLE OR IN PART, NOR ITS CONTENTS REVEALED IN ANY MANNER TO OTHERS WITHOUT THE EXPRESS WRITTEN PERMISSION OF QUALCOMM TECHNOLOGIES, INC.
THIS TECHNICAL DATA MAY BE SUBJECT TO U.S. AND INTERNATIONAL EXPORT, RE-EXPORT, OR TRANSFER ("EXPORT") LAWS. DIVERSION CONTRARY TO U.S. AND INTERNATIONAL LAW IS STRICTLY PROHIBITED.

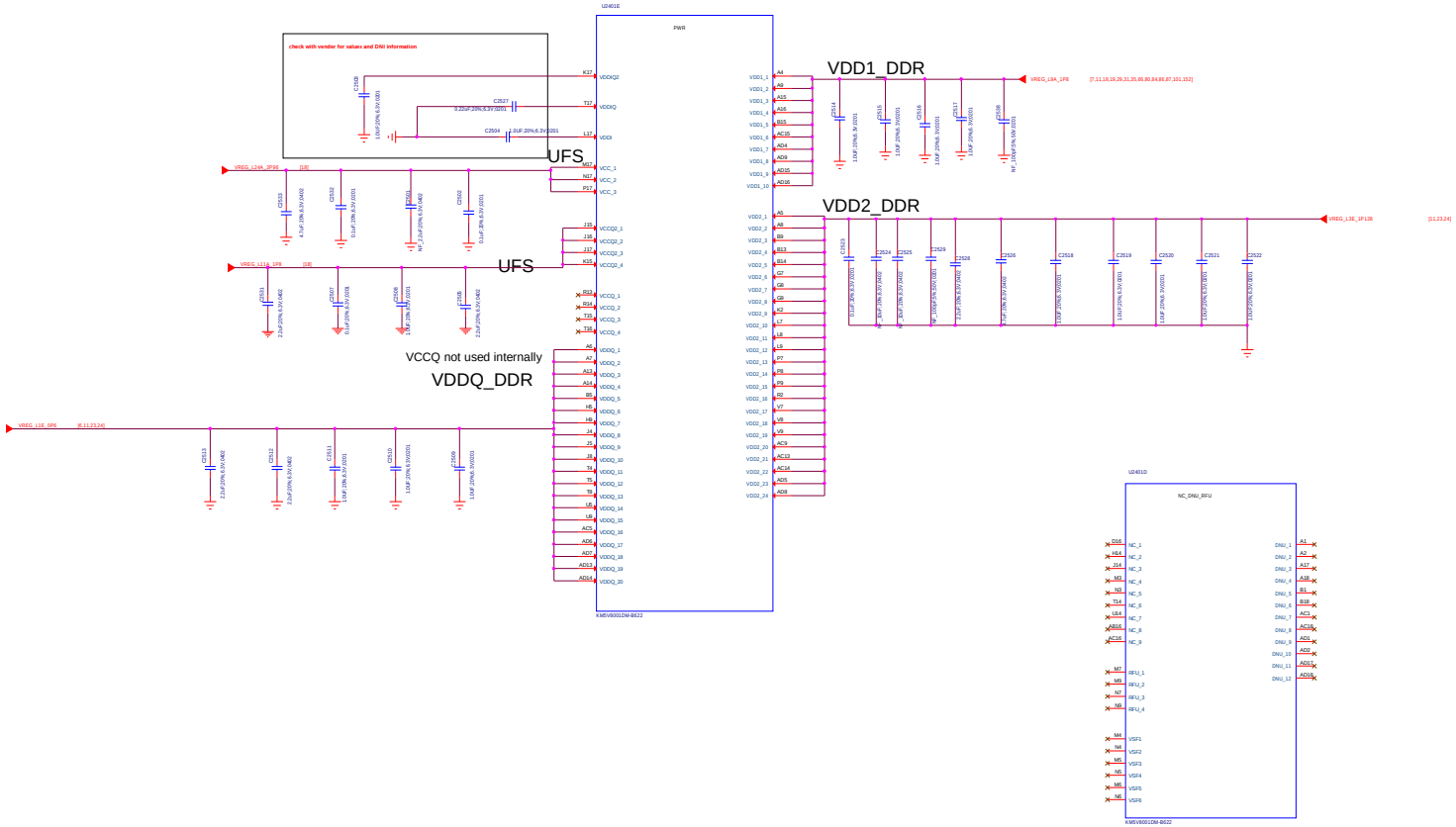

eMCP_POWER

Title	Page Name = 025.UMCP_POWER		
DOCUMENT NO.:	Design Name = S84350_1_16_20220216	8869	Custom
DEPARTMENT:	DESIGNER = zhangliegiang		
Date:	Page Modify Date = Monday, December 06, 2021	Sheet 25 of 152	

VERSION	EDITED BY	LAST EDIT DATE
1	LAST_EDITOR	2-23-2007_10:06

MAIN_AFVDD_2P8

807100002361:ET51528YB

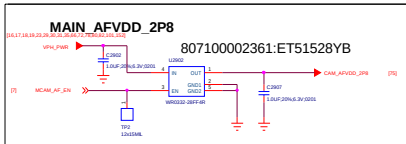

CAM_VDDIO_1P8

MAIN_DVDD

R2910更换1%精度

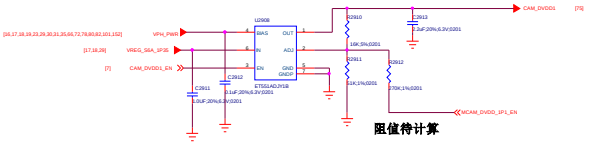

阻值待计算

CAM_AVDD1_2P8

807100002361:ET51528YB

MAIN

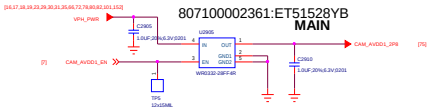

CAM_AVDD2_2P8

807100002361:ET51528YB

FRONT

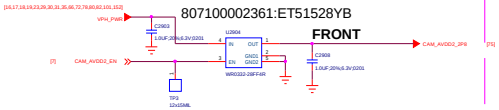

CAM_AVDD3_2P8

807100002361:ET51528YB

WIDE+MACRO

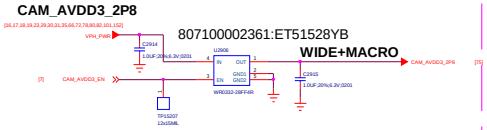

WIDE_DVDD

807100001064：LR5303B12FT5AG

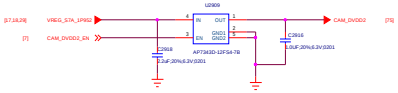

Front_DVDD : VREG_L3A_1P2

PMIC_PM8008_LEICA

Title: 029.CAM eLDOs		REV: V10
DOCUMENT NO.: S84338_1_10_20220216_0029		Size: Custom
DEPARTMENT: SD	DESIGNER: Ningdewu	
WINGTECH		
Date: Monday, December 06, 2021	Sheet 29 of 152	

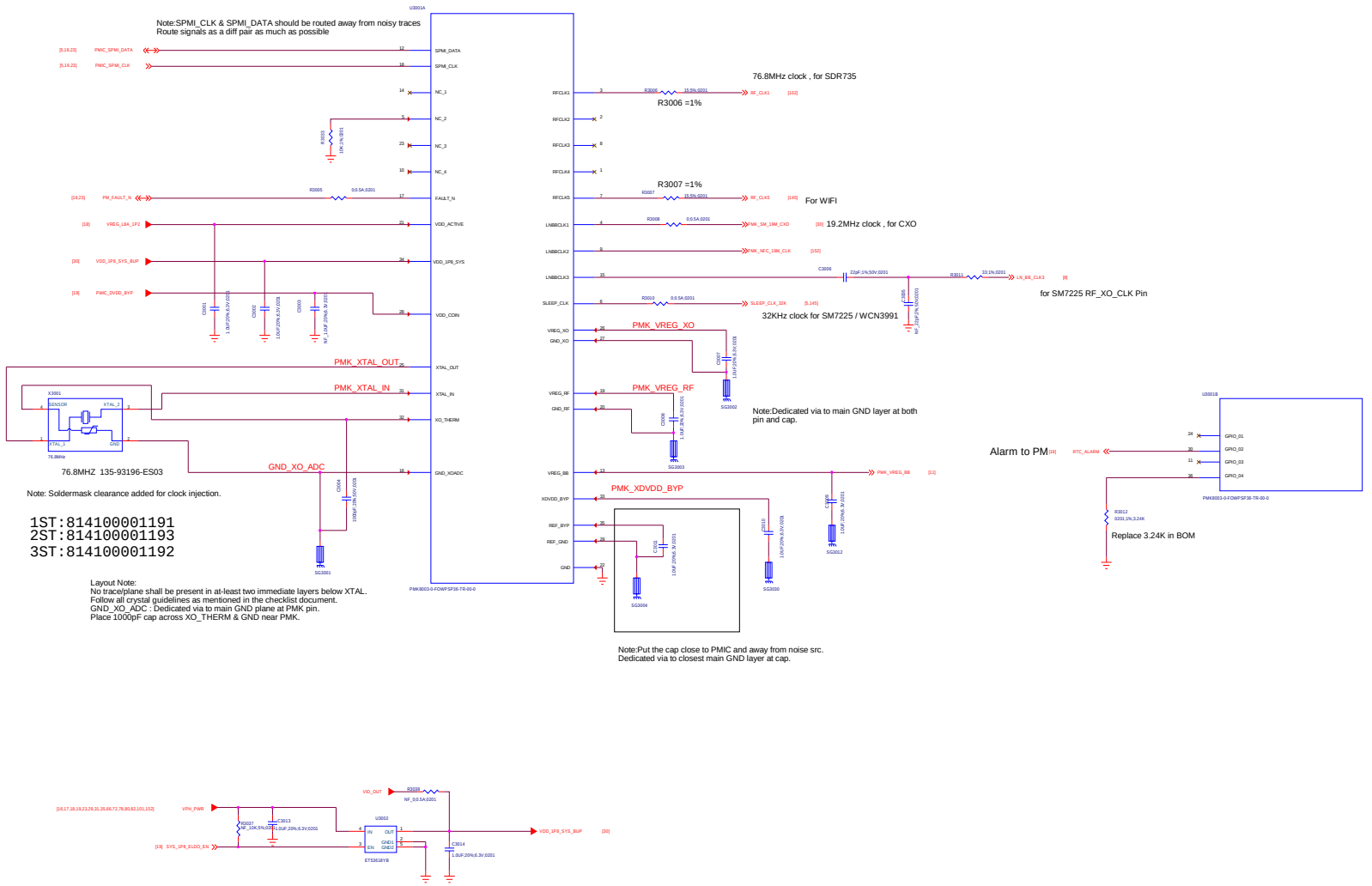

PMK8003_CLK

Title	030.PMK8003_TIMEX		REV: V10
DOCUMENT NO.:	SB4358_1_16_20220218_0859		Size: Custom
DEPARTMENT:	SB	DESIGNER:	Ningximou
Date:	Monday, December 06, 2021	Sheet	30 of 153

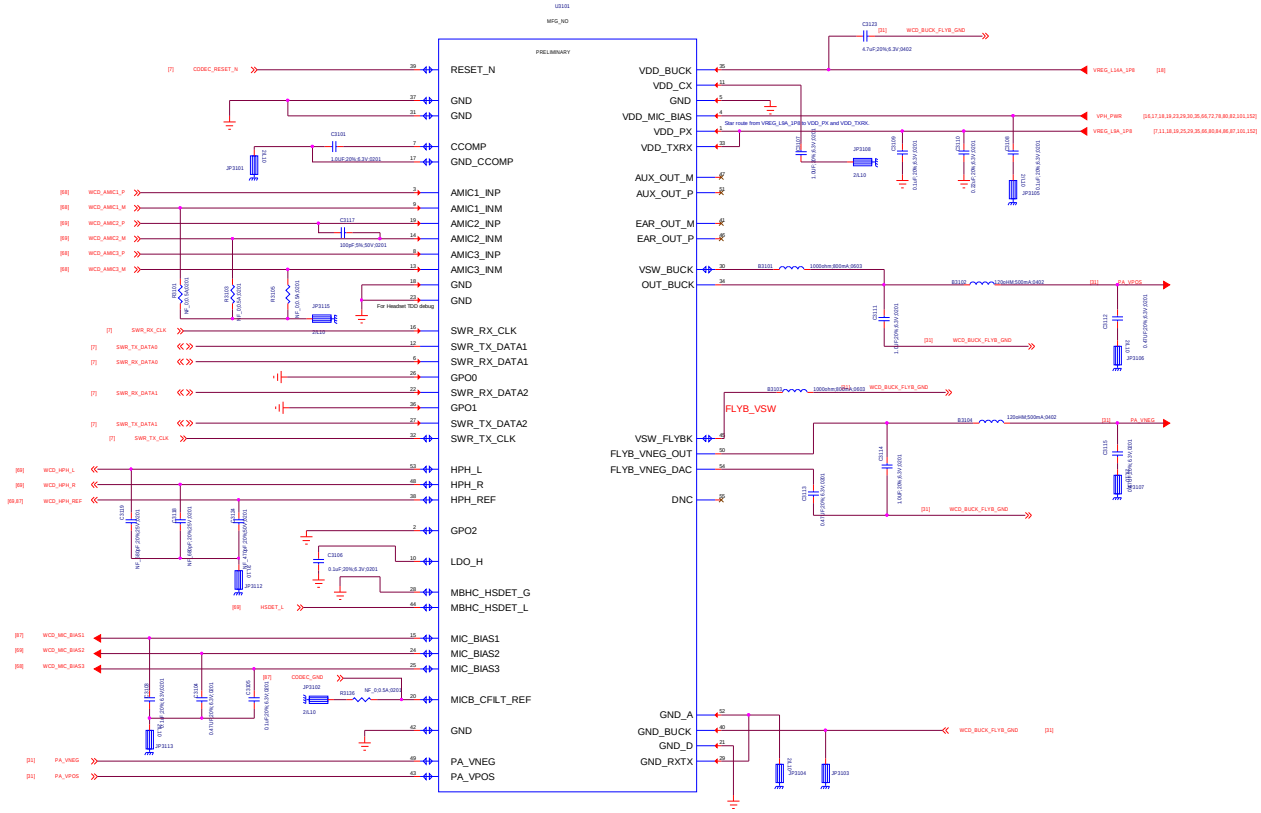

NOTE:B3101-B3104 Can't change to other PN.Otherwise will cause receiver TDD issue.

AUDIO_CODEC_WCD9370

Title: 031.CODEC_WCD9370		REV: V10
DOCUMENT NO.: SB4350_1_16_20220216_0959		Size: Custom
DEPARTMENT: BB	DESIGNER: Ningximou	
WINGTECH		
Date: Monday, December 06, 2021	Sheet 31 of 152	

35_Charger

Charger

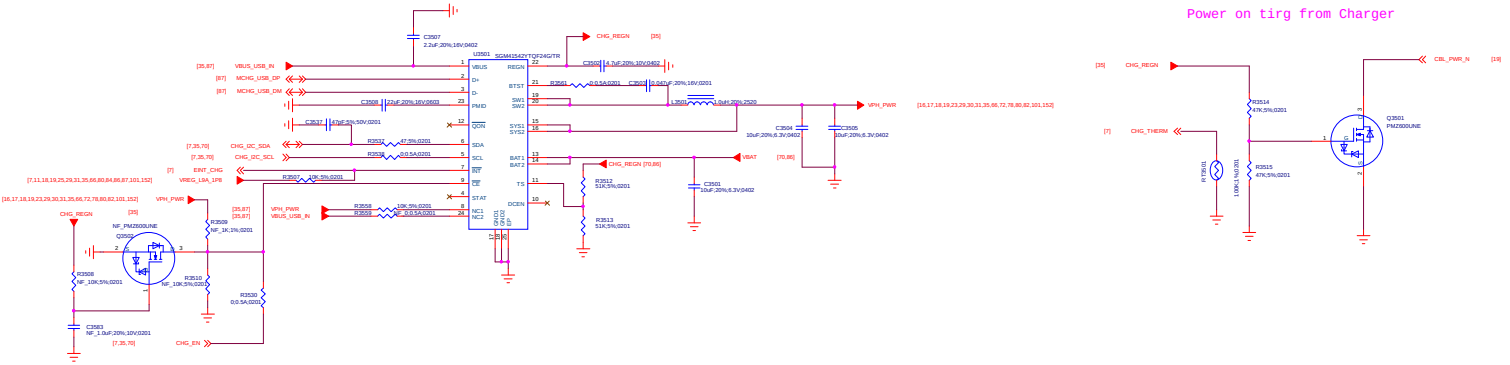

CC logic

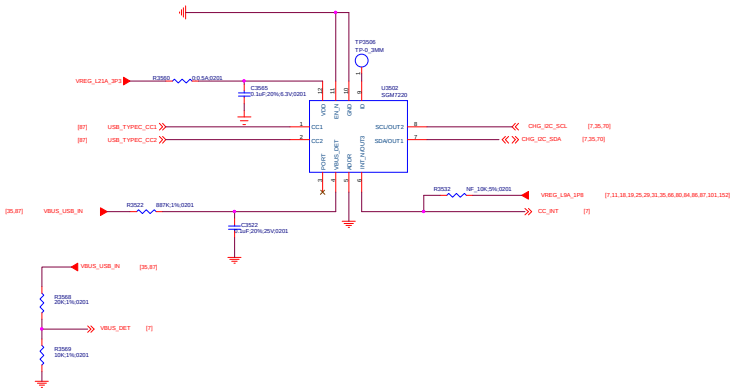

Title	035_Master Charger	REV: V10
DOCUMENT NO.:	S84350_1_16_20220218_0650	Size: D
DEPARTMENT:	BB	DESIGNER: Ningxinwu
WINGTECH		
Date: Tuesday, December 21, 2021	Sheet 35 of 152	

066_SPK

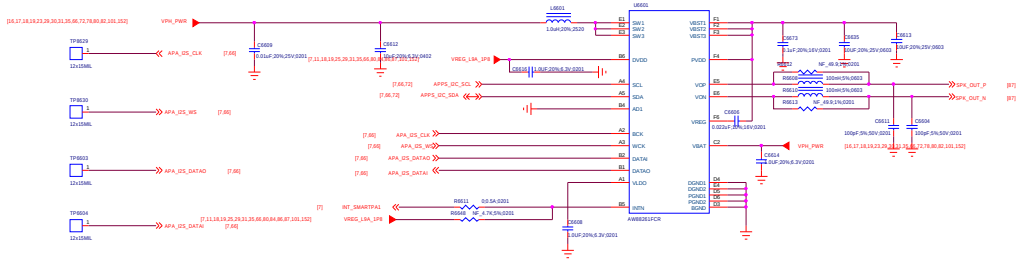

FOR REC

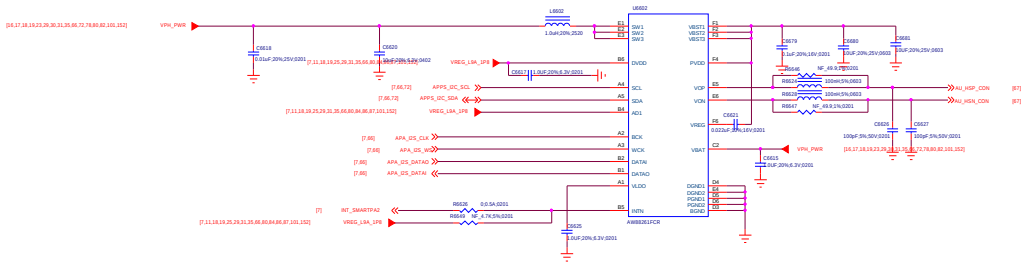

Title	066_SPK		REV: V10
DOCUMENT NO:	SB4350_1_16_20220216_0959		Size: Custom
DEPARTMENT:	BB	DESIGNER:	Ningpimou
Date:	Monday, December 06, 2021	Sheet	66 of 152

Receiver

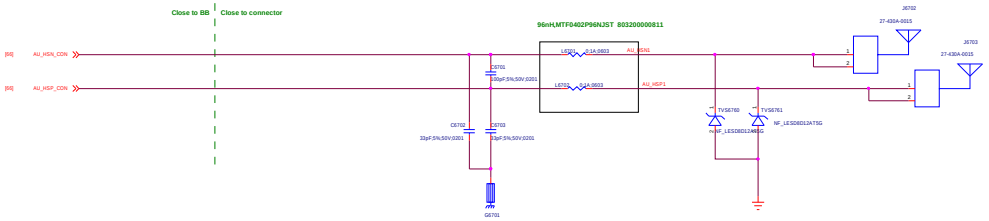

Title	067_RECEIVER	REV: V10
DOCUMENT NO.:	SB4350_1_16_20220216_0959	Size: Custom
DEPARTMENT:	BB	DESIGNER: Ningpimou
	WINGTECH	
Date: Monday, December 06, 2021		Sheet 67 of 152

MAIN MIC

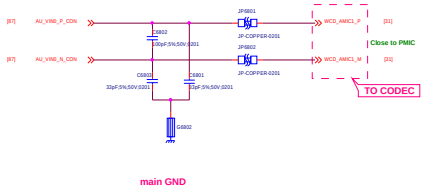

AUX MIC

second Microphone

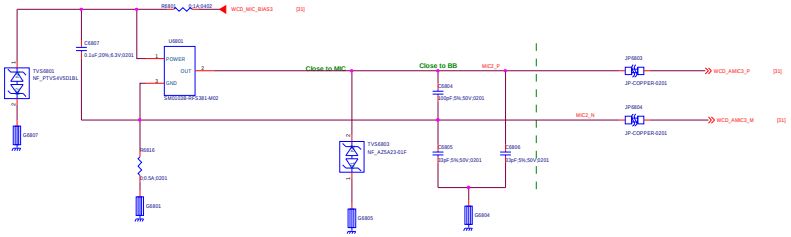

Title	068_MIC	REV: V10
DOCUMENT NO:	SB4350_1_16_20220216_0959	Size: Custom
DEPARTMENT:	BB	DESIGNER: Ningpimou
Date:	Monday, December 06, 2021	Sheet 68 of 152

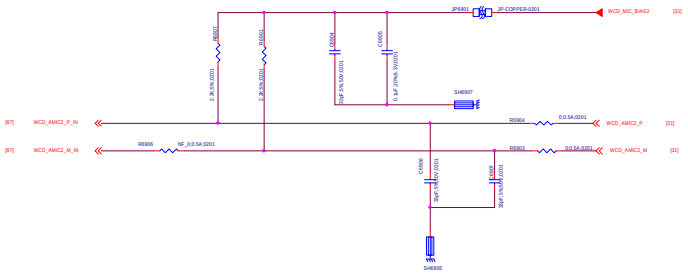

B6901/6903 use SZ1005K102CTF-XM
Bead;1000ohm;200mA;0.8ohm;0603;0.95mm

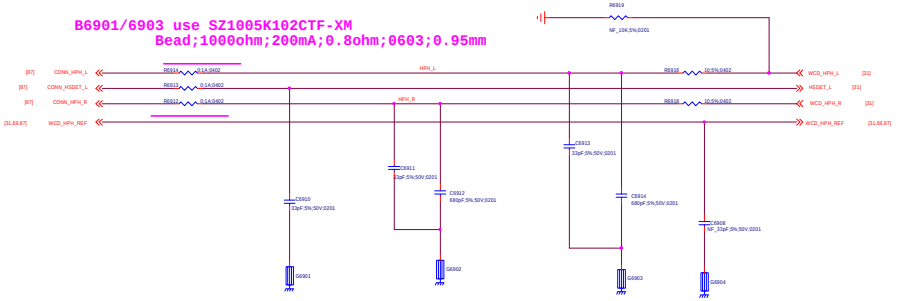

Title	069_EARPHONE	REV: V10
DOCUMENT NO:	SB4350_1_16_20220216_0959	Size: Custom
DEPARTMENT:	SB	DESIGNER: Ningpimou
Date:	Monday, December 06, 2021	Sheet 69 of 152

WINGTECH

070_Battery/Sidekey

BATTERY MASTER CONNECTOR

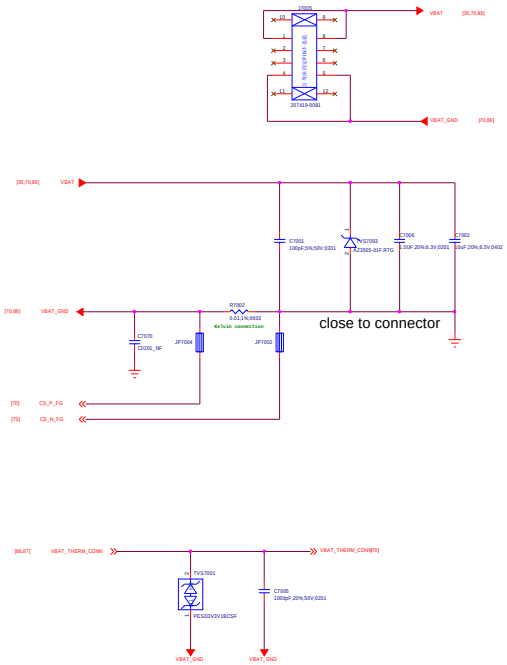

POWER KEY /VOL KEY

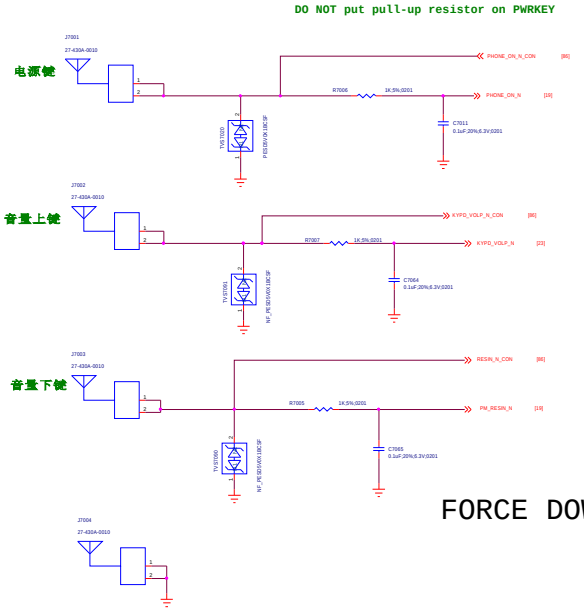

FORCE DOWNLOAD

FG

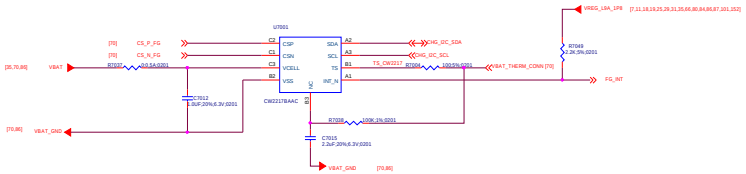

Title	070_BATTERY/SIDESKY	REV: V10	
DOCUMENT NO:	SB4350_1_16_20220216_0959	Size	Custom
DEPARTMENT:	BB	DESIGNER:	Ningpimou
Date:	Tuesday, February 15, 2022	Sheet	70 of 152

072_LCD/CTP IF

MIPI CMF

CMF
1st:811310000121
2st:811310000126

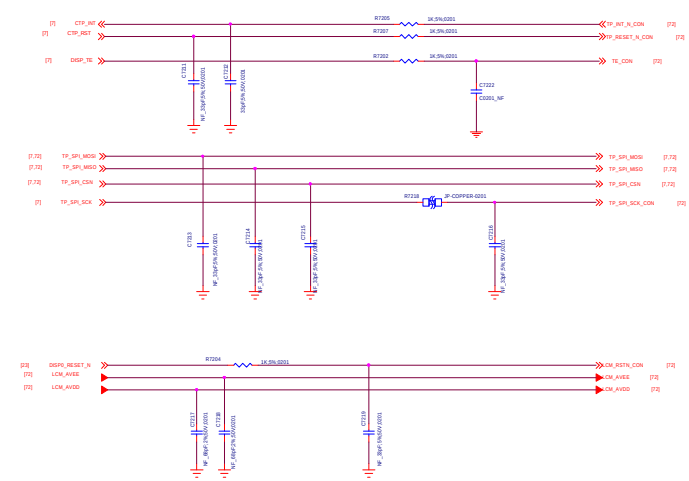

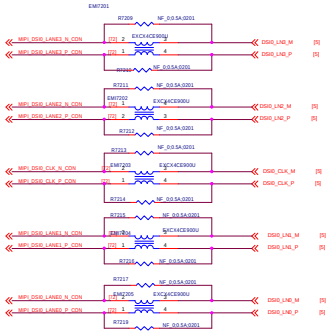

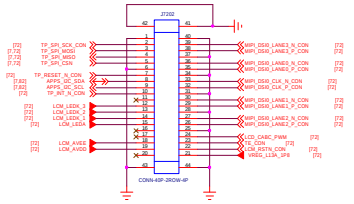

LCM Gate Drive

SM5109/OCP2130 LCM Gate Driver I2C address: 0X3E (Write:0x7C, Read:0x7D)

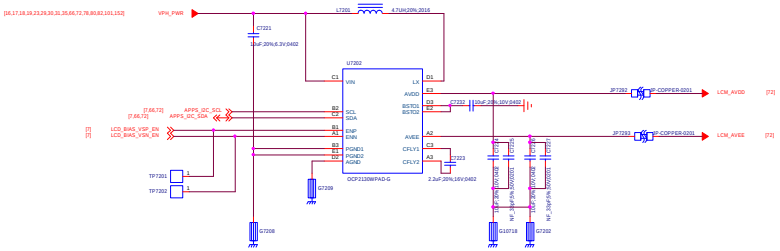

Reserve for ESD

LCD-BACKLIGHT

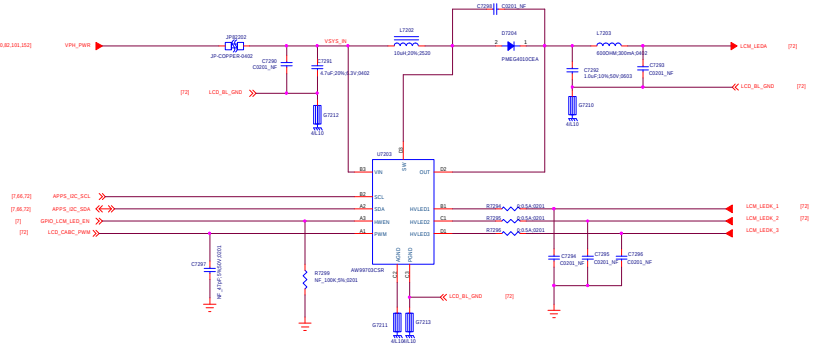

Title	072_LCD/CTP/RF	REV: V10	
DOCUMENT NO:	SB4350_1_16_20220216_0959	Size	Custom
DEPARTMENT:	BB	DESIGNER:	Ningpinwu
Date:	Wednesday, December 22, 2021	Sheet	72 of 152

41_CAMERA IF

Main Camera 50M

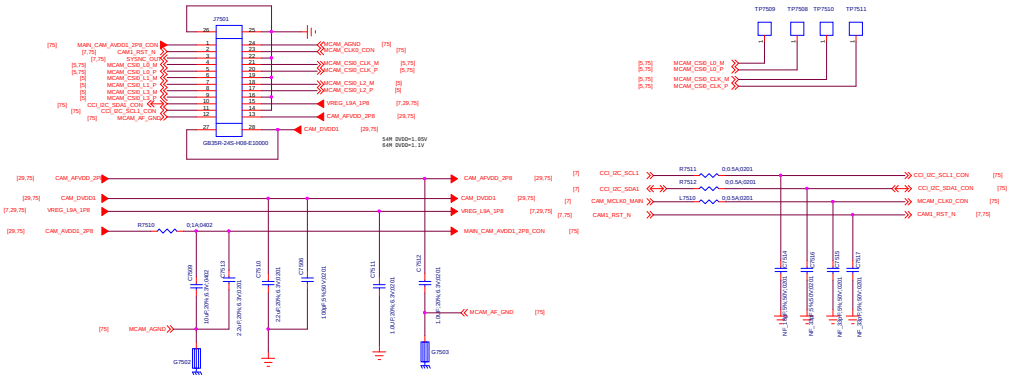

8MP Wide FF

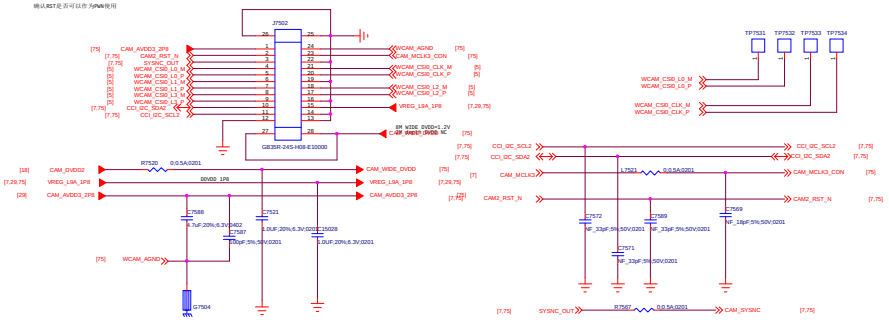

Front Camera 16MP
8MP/13MP compatible

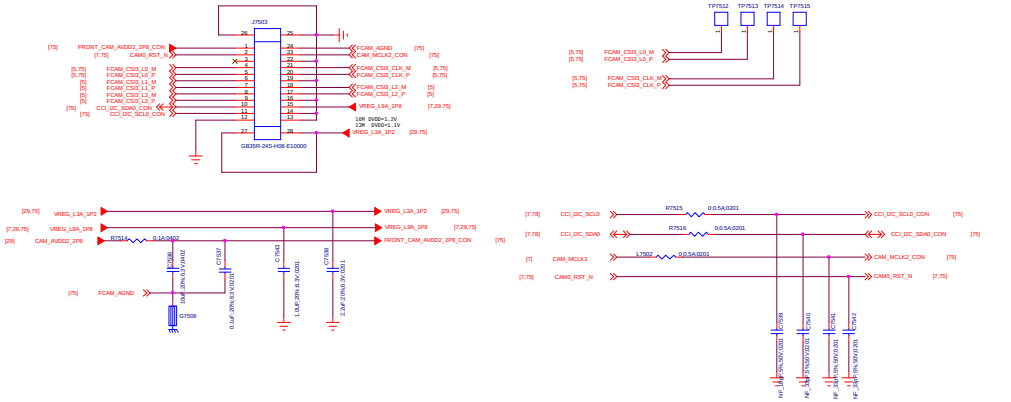

Macro Camera 2M

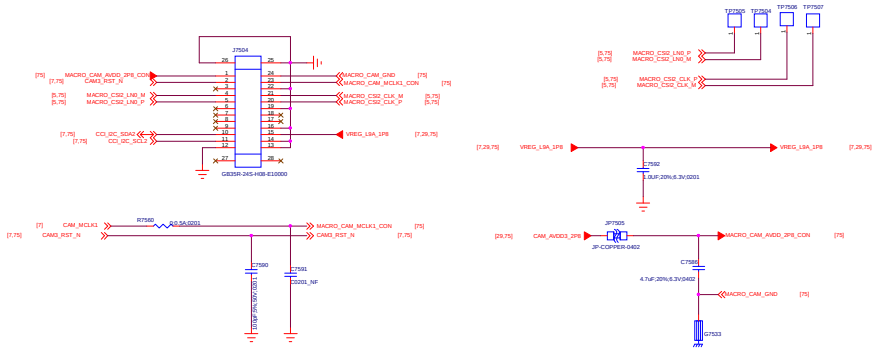

Title	075_CAMERA IF		REV: V10
DOCUMENT NO.:	SB4358_1_16_20220210_0959		Size: D
DEPARTMENT:	BB	DESIGNER:	Ningsimu
Date:	Monday, December 06, 2021	Sheet	75 of 152

078_Flash/RGB/Vibrator

Flash LED

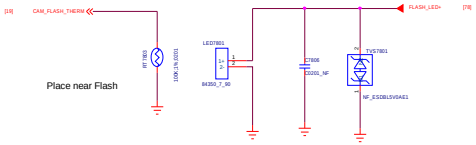

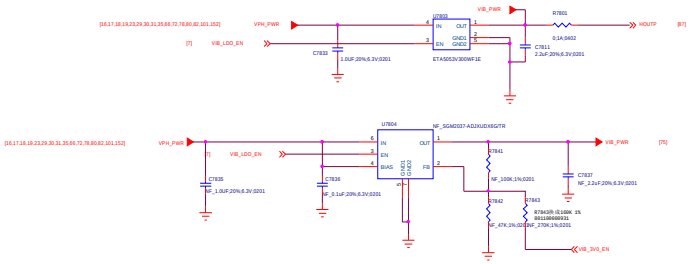

Flash Driver

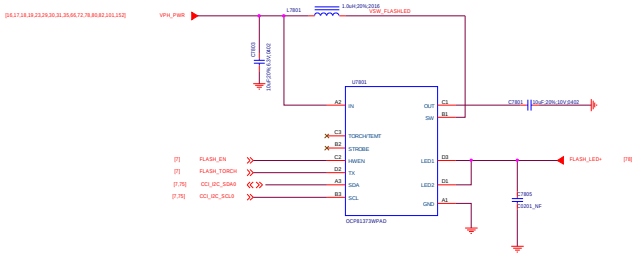

Title	078_LED/Flash/Vibrator		REV: V10
DOCUMENT NO:	SB4350_1_16_20220216_0959		Size: Custom
DEPARTMENT:	BB	DESIGNER:	Ningpimou
WINGTECH			
Date:	Monday, December 06, 2021	Sheet	78 of 152

080_FingerPrint

CONNECTOR

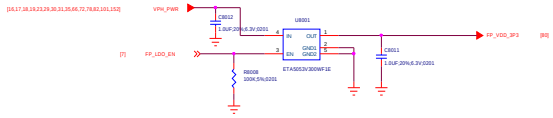

Fingerprint

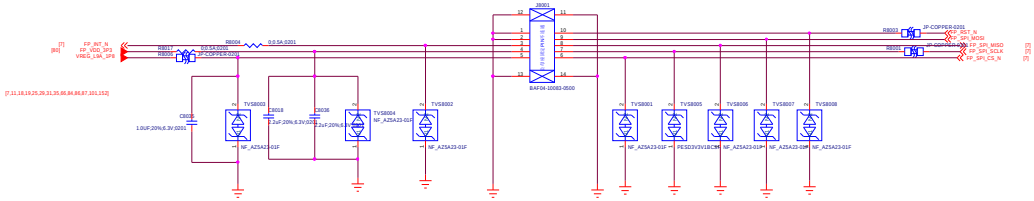

Title	080_FingerPrint	REV: V10
DOCUMENT NO:	SB4350_1_16_20220216_0959	Size: Custom
DEPARTMENT:	BB	DESIGNER: Ningpinwu
Date:	Wednesday, January 26, 2022	Sheet 80 of 152

082_SENSORS

M-SENSOR

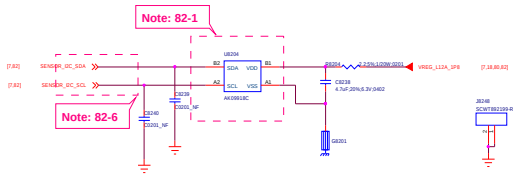

ALS+PS+IR

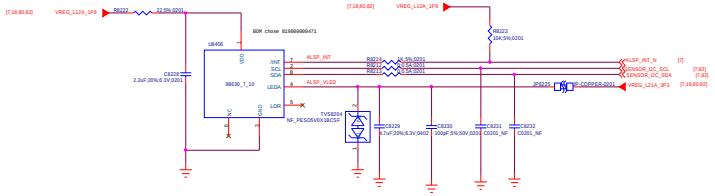

Gyro Sensor

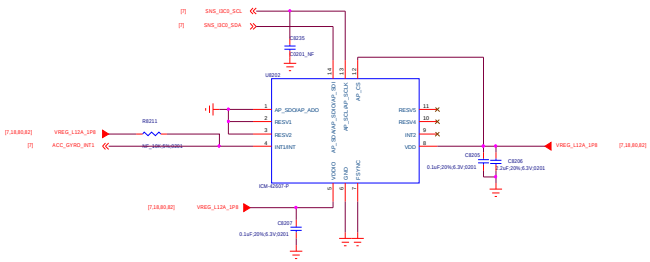

Title	082_SENSORS		REV: V10
DOCUMENT NO:	SB4350_1_16_20220216_0959		Size: Custom
DEPARTMENT:	BB	DESIGNER:	Ningpimou
WINGTECH			
Date:	Monday, December 06, 2021	Sheet	82 of 152

1ST:813300002272
2ST:813300002271

SIM & T_Card Slot

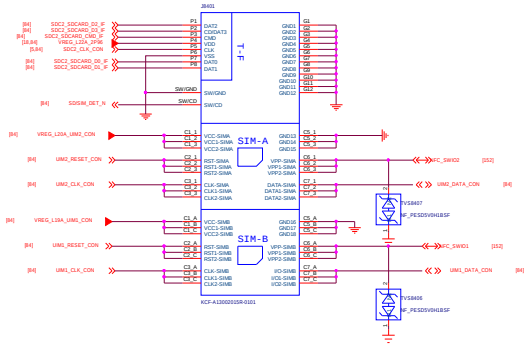

SIM CARD

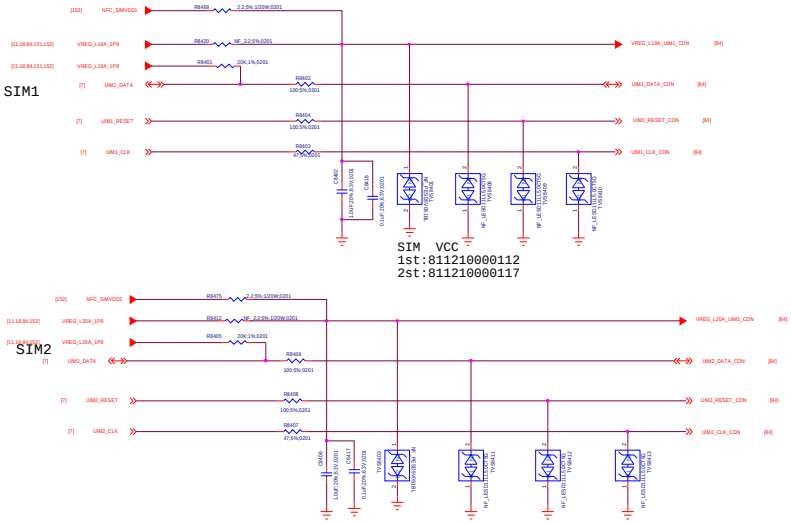

SIM VCC
1st:811210000112
2st:811210000117

T_Card

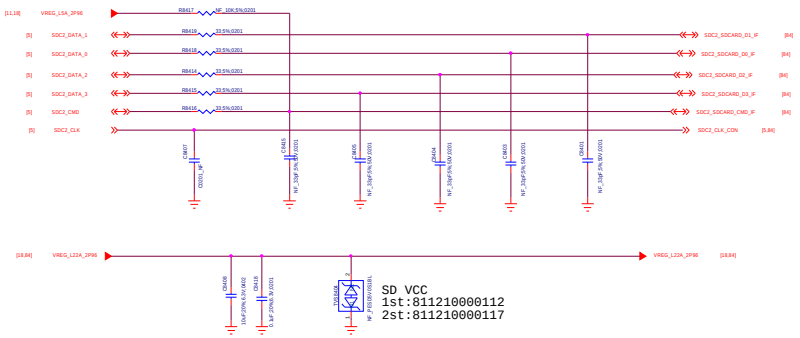

SD VCC
1st:811210000112
2st:811210000117

Detect

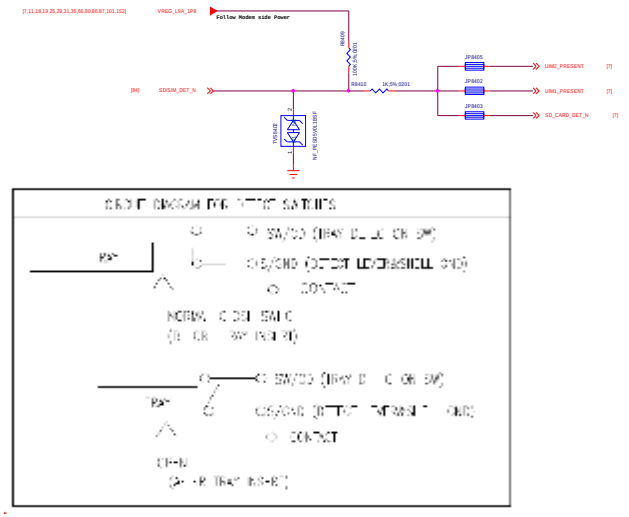

Title	084_SIM/SD I/F	REV: V10
DOCUMENT NO:	SB4350_1_16_20220216_0959	Size: Custom
DEPARTMENT:	BB	DESIGNER: Ningpinwu
Date:	Tuesday, January 04, 2022	Sheet 84 of 152

SIDEKEY

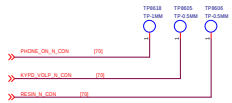

9008 DOWNLOAD

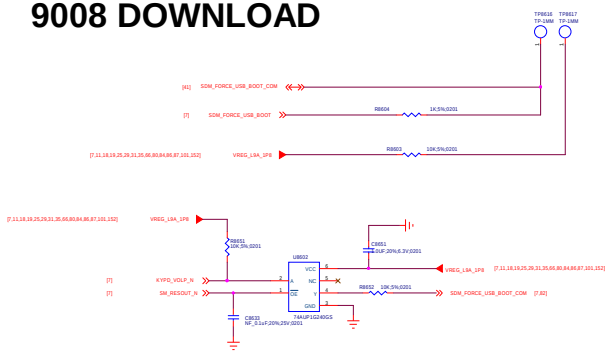

USB

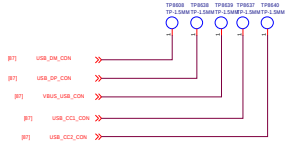

Battery

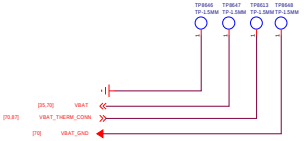

UART

JTAG

MARK/Shield/Lable/PCB

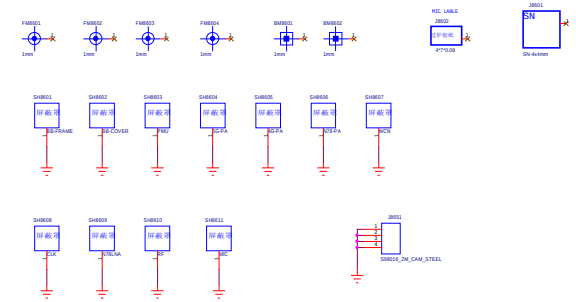

Hole

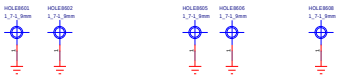

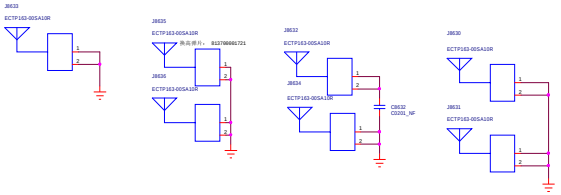

Title	086_Testpoint/Shielding/GND	REV: V10	
DOCUMENT NO:	SB4350_1_16_20220216_0059	Size	Custom
DEPARTMENT:	BB	DESIGNER:	Ningpimou
Date:	Wednesday, February 16, 2022	Sheet	86 of 152

087_Sub PCB IF / USB IF

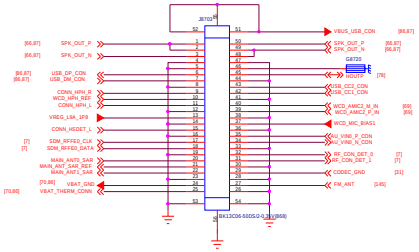

CC IF

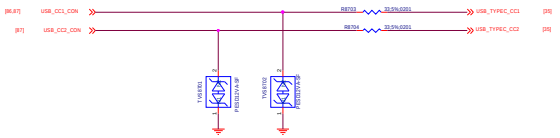

OVP

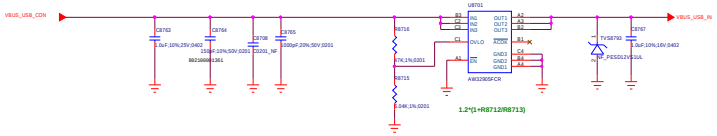

10.5V

USB IF

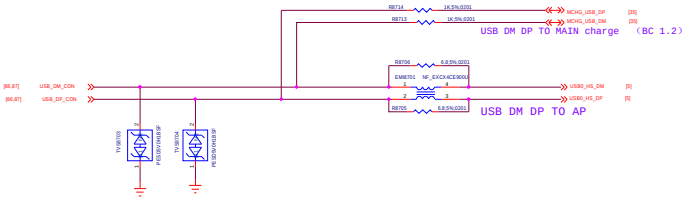

Title	087_Sub PCB IF / USB IF		REV: V10
DOCUMENT NO:	SB4350_1_16_20220216_0959		Size: Custom
DEPARTMENT:	BB	DESIGNER:	Ningpimou
WINGTECH			
Date:	Tuesday, February 15, 2022	Sheet	87 of 152

100.Customer_RFI

REVISIONS			
LTR	DESCRIPTION	DATE	APPROVED
A	INITIAL RELEASE		

Title: 100.Customer_RFI			REV: V10
DOCUMENT NO.: S84350_1_16_20220218_0050			Size: Custom
DEPARTMENT: WINGTECH-XA		DESIGNER: Xue Wei	
WINGTECH			
Date: Tuesday, December 07, 2021		Sheet 100 of 152	

VERSION	EDITED BY	LAST EDIT DATE
1	LAST_EDITOR	2-23-2007_10:06

101.RF_Block

REVISIONS			
LTR	DESCRIPTION	DATE	APPROVED
A	INITIAL RELEASE		

Title: 101.RF_Block	REV: V10
DOCUMENT NO.: S84350_1_16_20220216_0859	Size: Custom
DEPARTMENT = WINGTECH-XA	DESIGNER = Xue Wei
Date: Tuesday, December 07, 2021	Sheet 101 of 152

VERSION	EDITED BY	LAST EDIT DATE
1	LAST_EDITOR	2-23-2007_10:06

102.RF_Transceiver_SDR735 WMSS

REVISIONS

LTR	DESCRIPTION	DATE	APPROVED

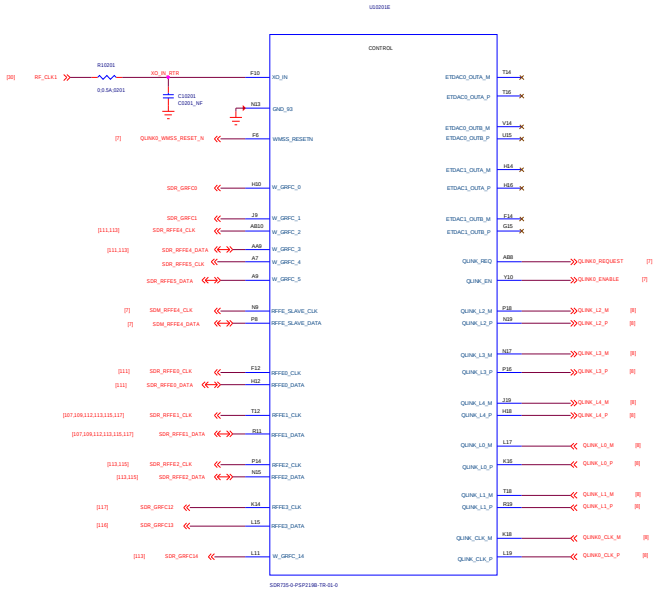

Title	102.RF_Transceiver_SDR735 WMSS	REV: V10
DOCUMENT NO.:	584350_1_10_20220216_0009	Size: Custom
DEPARTMENT = WINGTECH-XA	DESIGNER= Xue Wei	
Date: Tuesday, December 07, 2021	Sheet 102 of 152	

VERSION	EDITED BY	LAST EDIT DATE
1	LAST_EDITOR	2-23-2007_10:06

103.RF_Transceiver_SDR735_TRX

REVISIONS			
LTR	DESCRIPTION	DATE	APPROVED
A	INITIAL RELEASE		

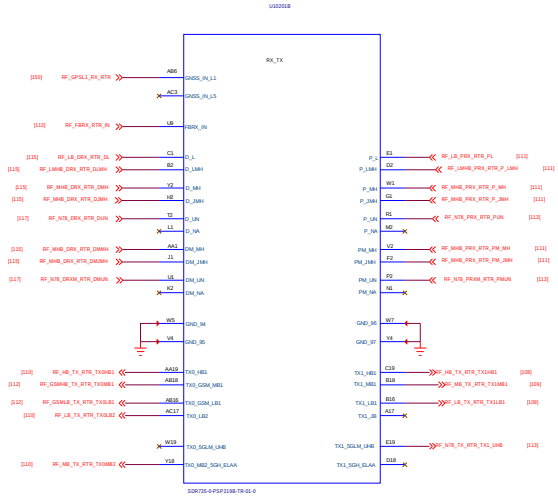

Title	103.RF_Transceiver_SDR735_TRX	REV:	V30
DOCUMENT NO:	SB4350_1_16_20220218_0959	Size	Custom
DEPARTMENT = WINGTECH-XA		DESIGNER = Xue Wei	
Date :	Tuesday, December 07, 2021	Sheet	103 of 152

VERSION	EDITED BY	LAST EDIT DATE
1	LAST_EDITOR	2-23-2007_10:06

105.RF_Transceiver_SDR735_GND

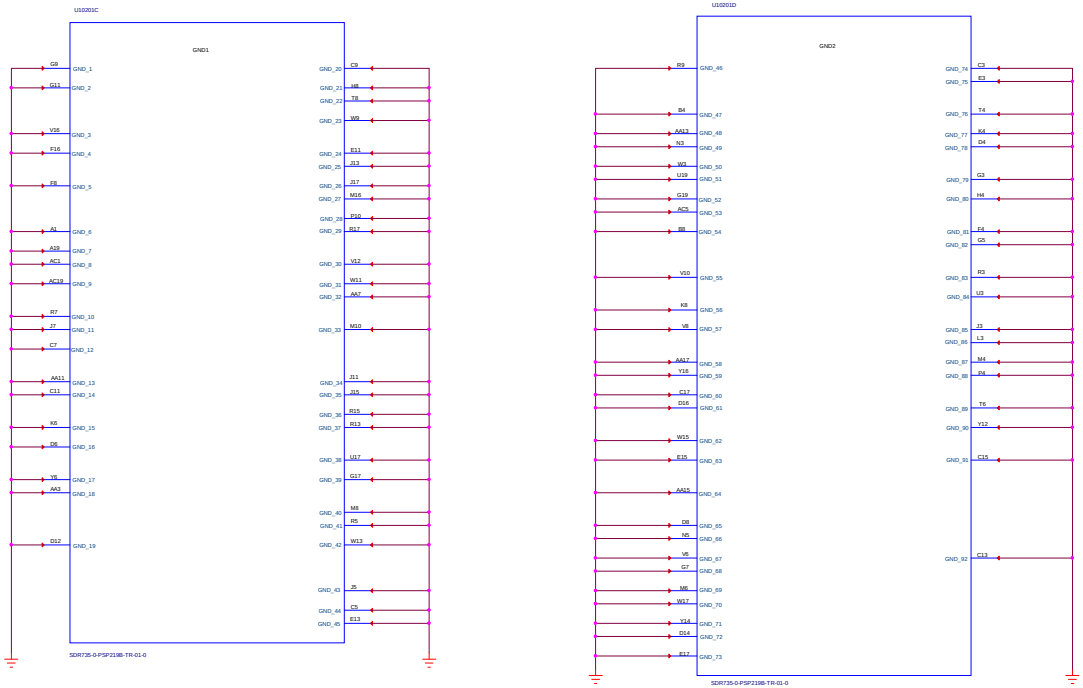

Title: 105.RF_Transceiver_SDR735_GND		REV: V10
DOCUMENT NO.: S84359_1_16_20230216_0959		Size: D
DEPARTMENT = WINGTECH-XA	DESIGNER = Xue Wei	
WINGTECH		
Date: Tuesday, December 07, 2021	Sheet 105 of 152	

106.RF_Transceiver_SDR735_Power

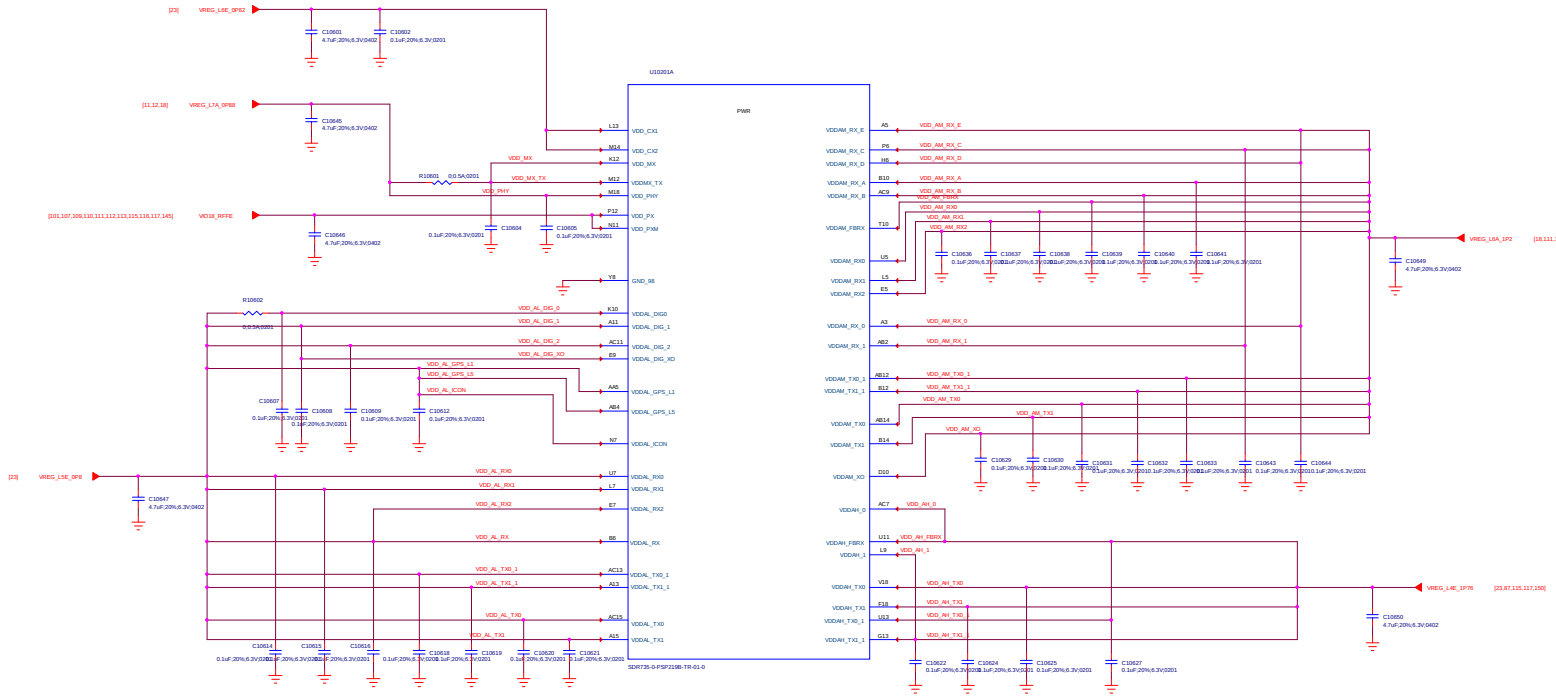

VDDAL Max current (mA)
VDDAL_DIG0 115.2mA
VDDAL_DIG_1 28.8mA
VDDAL_DIG_2 19.2mA
VDDAL_DIG_XO 14.4mA
VDDAL_GPS_L1 26.4mA
VDDAL_GPS_L5 26.4mA
VDDAL_ICON 6mA
VDDAL_RX0 60mA
VDDAL_RX1 84mA
VDDAL_RX2 60mA
VDDAL_RX 6mA
VDDAL_TX0_1 78.32mA
VDDAL_TX1_1 62.72mA
VDDAL_TX0 14.27mA
VDDAL_TX1 14.27mA
Total (mA)333mA

VDDAM Max current (mA)
VDDAM_RX_E 27.6mA
VDDAM_RX_C 56.4mA
VDDAM_RX_D 54mA
VDDAM_RX_A 120mA
VDDAM_RX_B 56.76mA
VDDAM_FBRX 32.4mA
VDDAM_RX0 126mA
VDDAM_RX1 126mA
VDDAM_RX2 126mA
VDDAM_RX_0 60mA
VDDAM_RX_1 84mA
VDDAM_TX0_1 54.6mA
VDDAM_TX1_1 36mA
VDDAM_TX0 21mA
VDDAM_TX1 21mA
VDDAM_XO 6mA
Total (mA)550mA

VDD_CX Max current (mA)
VDD_CX 316.45mA
VDD_CX 316.45mA
Total (mA)632.9mA
VDD_PHY/MX Max current (mA)
VDD_MX 32.4mA
VDDMX_TX 24mA
VDD_PHY 90mA
Total (mA)137mA
VDD_PX/PXM Max current (mA)
VDD_PX 3.6mA
VDD_PXM 3.6mA
Total (mA)6mA

VDDAH Max current (mA)
VDDAH_0 10.8mA
VDDAH_FBRX 12mA
VDDAH_1 20.4mA
VDDAH_TX0 40.2mA
VDDAH_TX1 40.2mA
VDDAH_TX0_1 24mA
VDDAH_TX1_1 24mA
Total (mA)77mA

Title	REV: V10
DOCUMENT NO.: Design Name = SB4350_1_16_20220216_0000 D	
DEPARTMENT: DEPARTMENT = RF_XO'an	DESIGNER: DESIGNER = XA05616
Date: Page Modify Date = Tuesday, December 05, 2021	106 of 152

107.APT_QET4101/6105

REVISIONS			
LTR	DESCRIPTION	DATE	APPROVED
A	INITIAL RELEASE		

QET4101_CH0

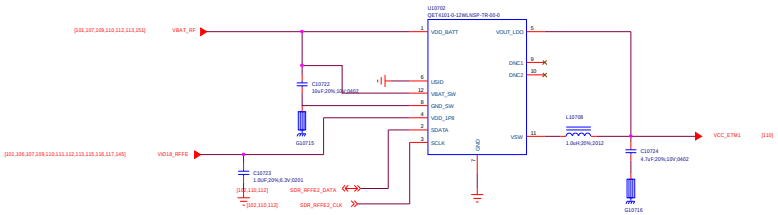

QET6105_CH1

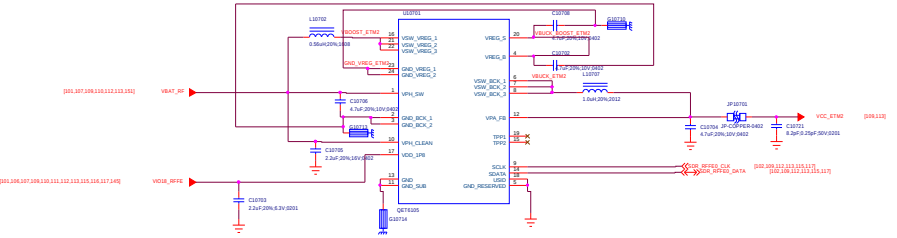

Title	107.APT_Module
REV:	V10
DOCUMENT NO.:	S84350_1_16_20220216_0859
Size	Custom
DEPARTMENT = WINGTECH-XA	DESIGNER = Xue Wei
Date:	Tuesday, February 08, 2022
Sheet	107 of 152

VERSION	EDITED BY	LAST EDIT DATE
1	LAST_EDITOR	2-23-2007_10:06

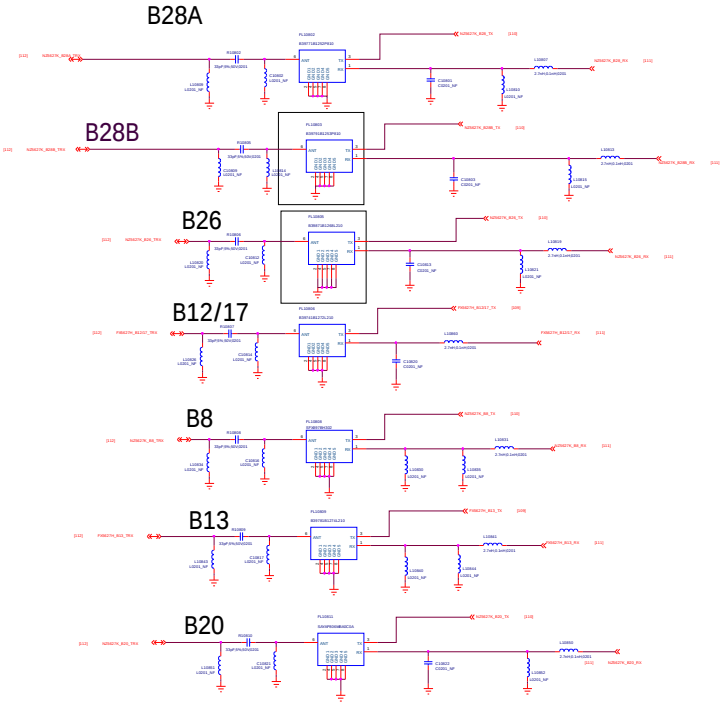
B28A
B28B
B26
B12/17
B8
B13
B20

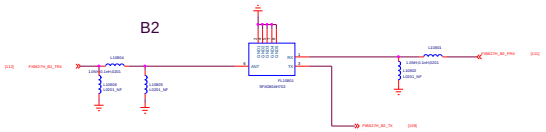
B2

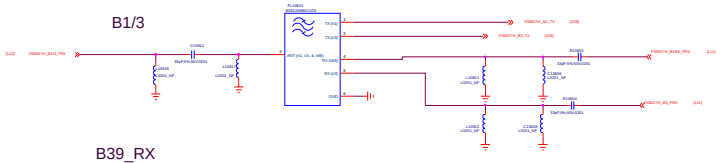
B1/3

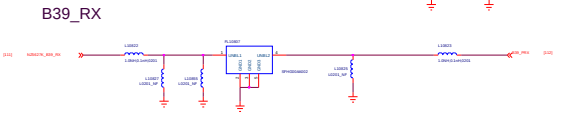
B39_RX

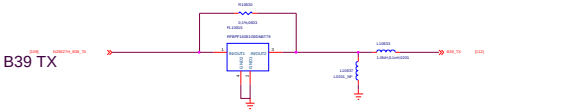
B39 TX

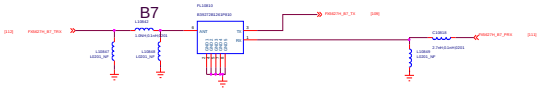
B7

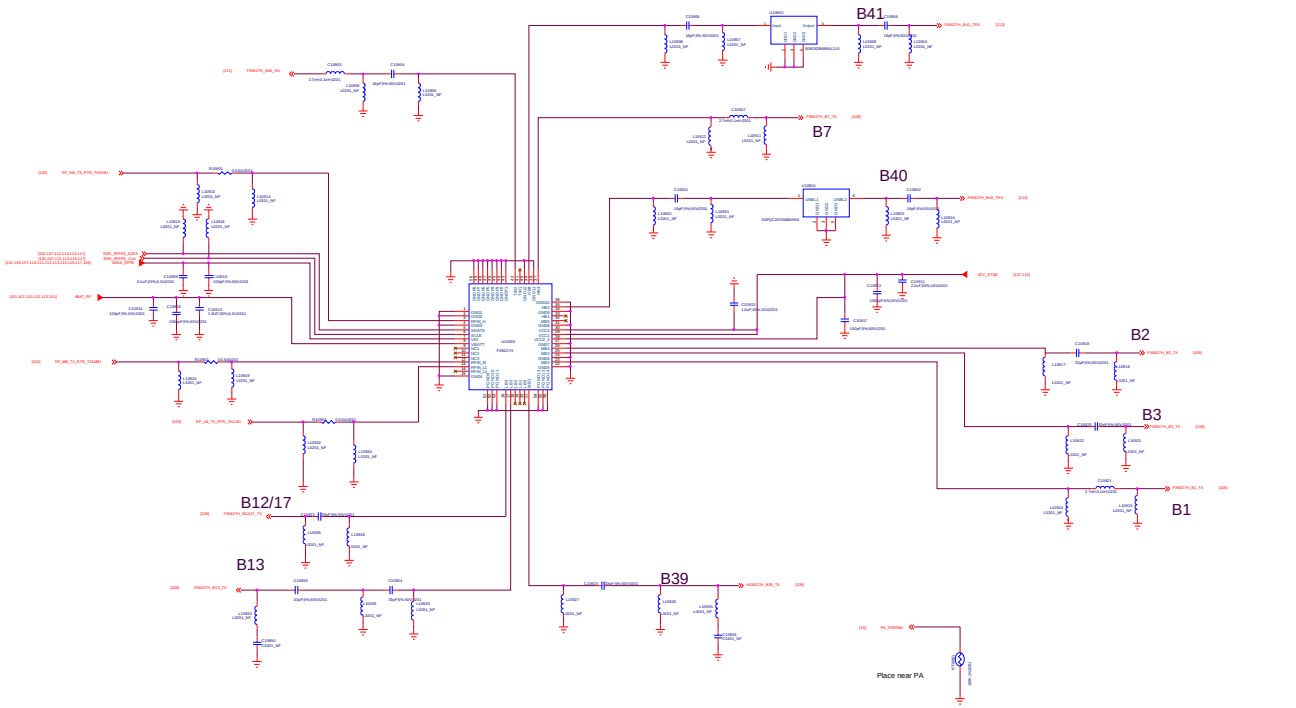
B41
B7
B40
B2
B3
B1
B12/17
B13
B39
Place near PA

110.NZ5627KTR1

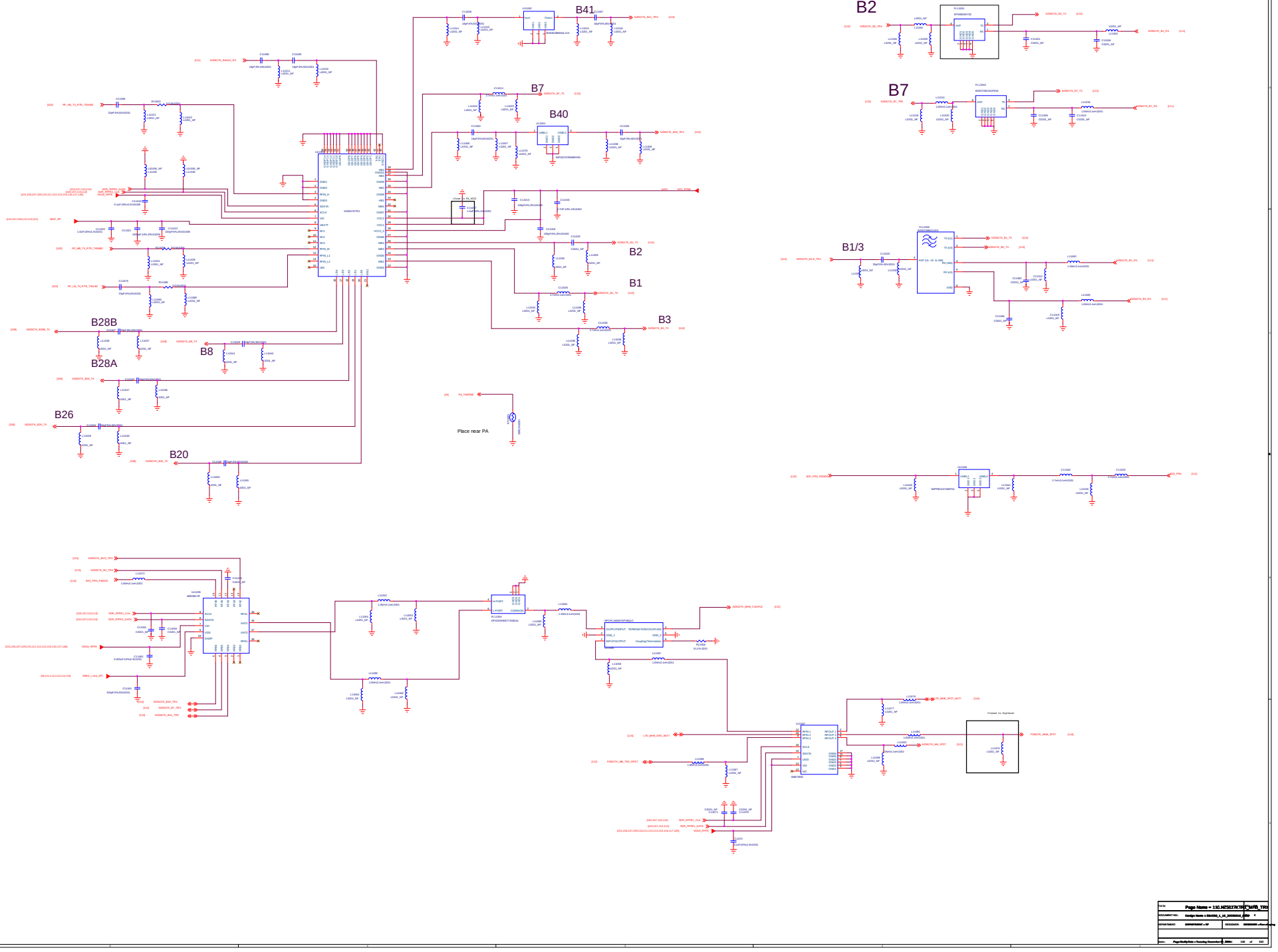

PRX_QLN5030

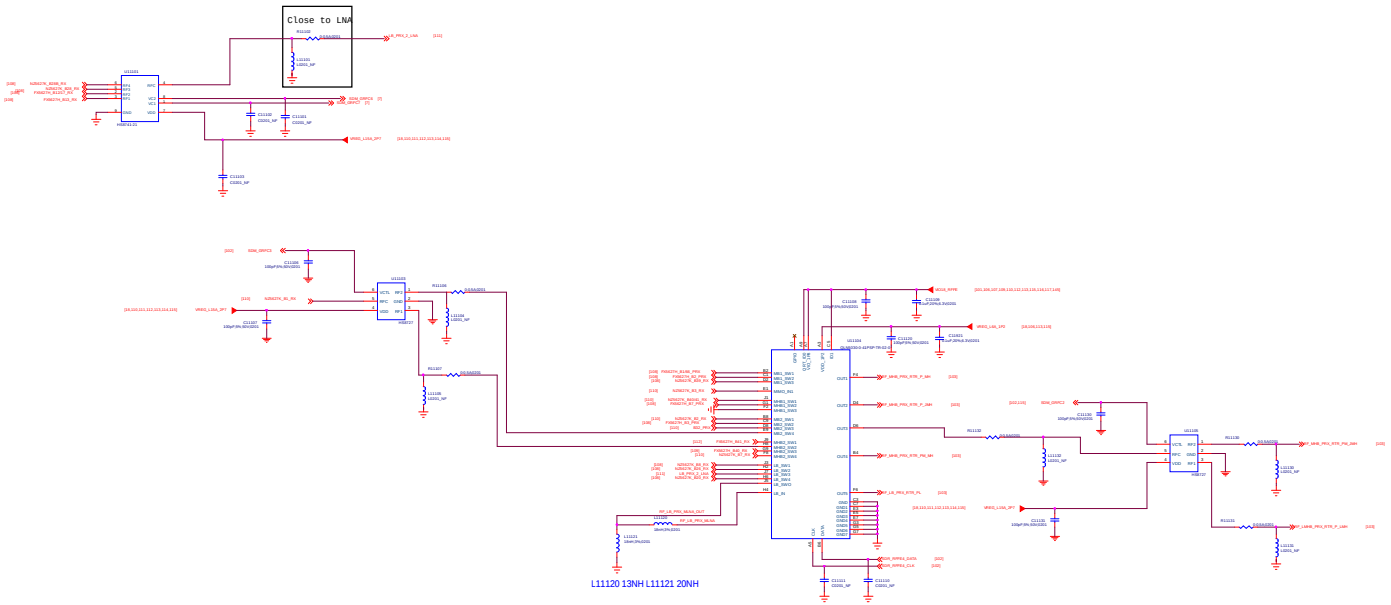

FX5566

TXM PA IN

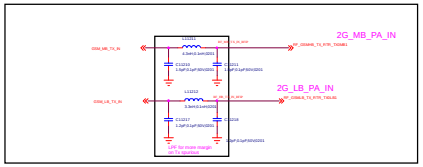

VCC MB PAM MB

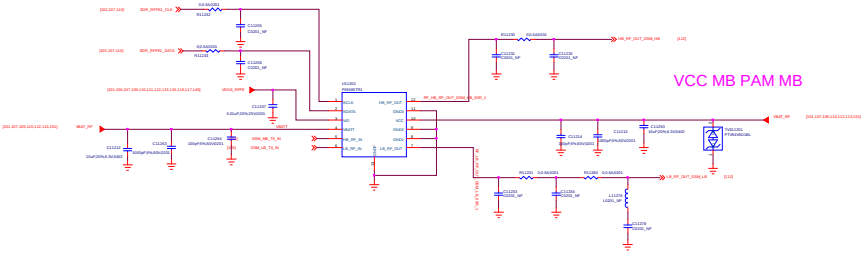

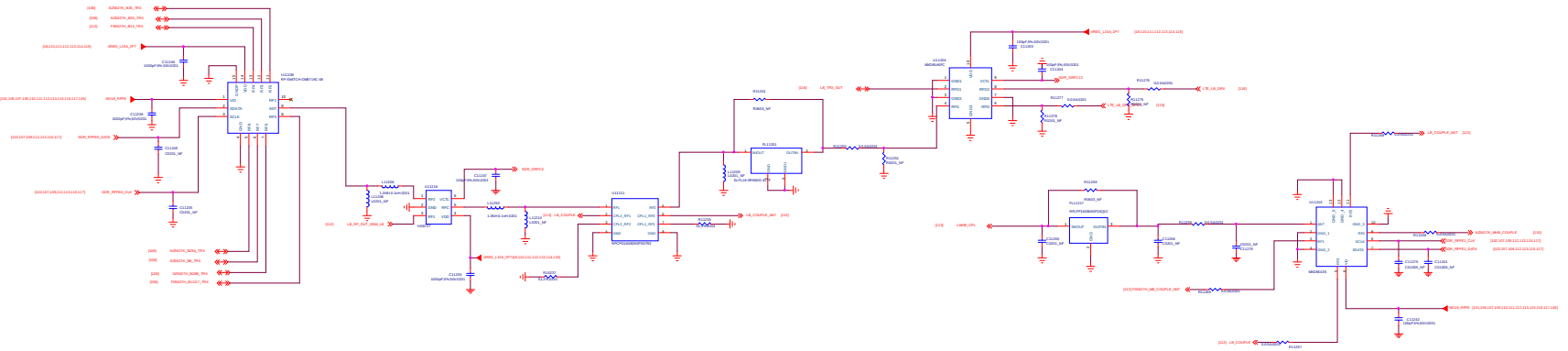

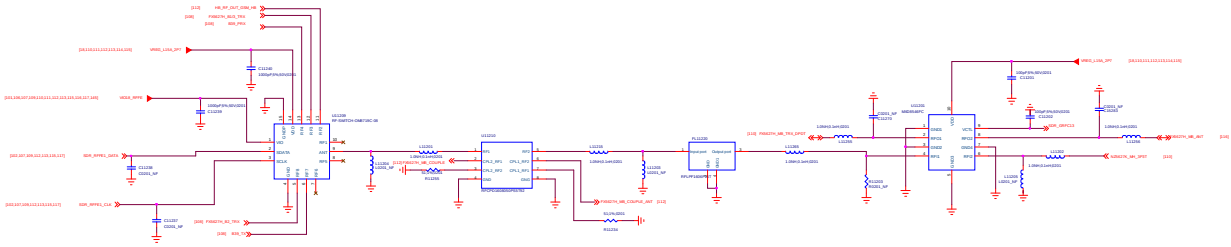

B41_PRX

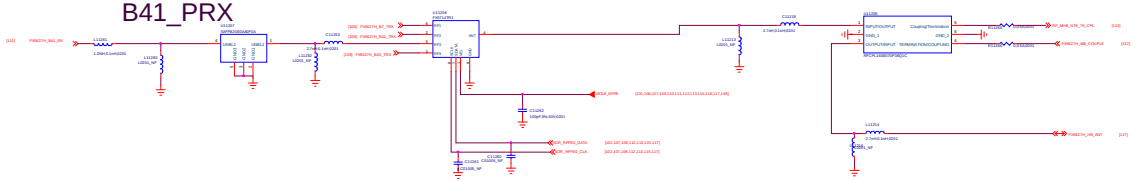

N78 SRS&TRX

B48/N77/78_TRX

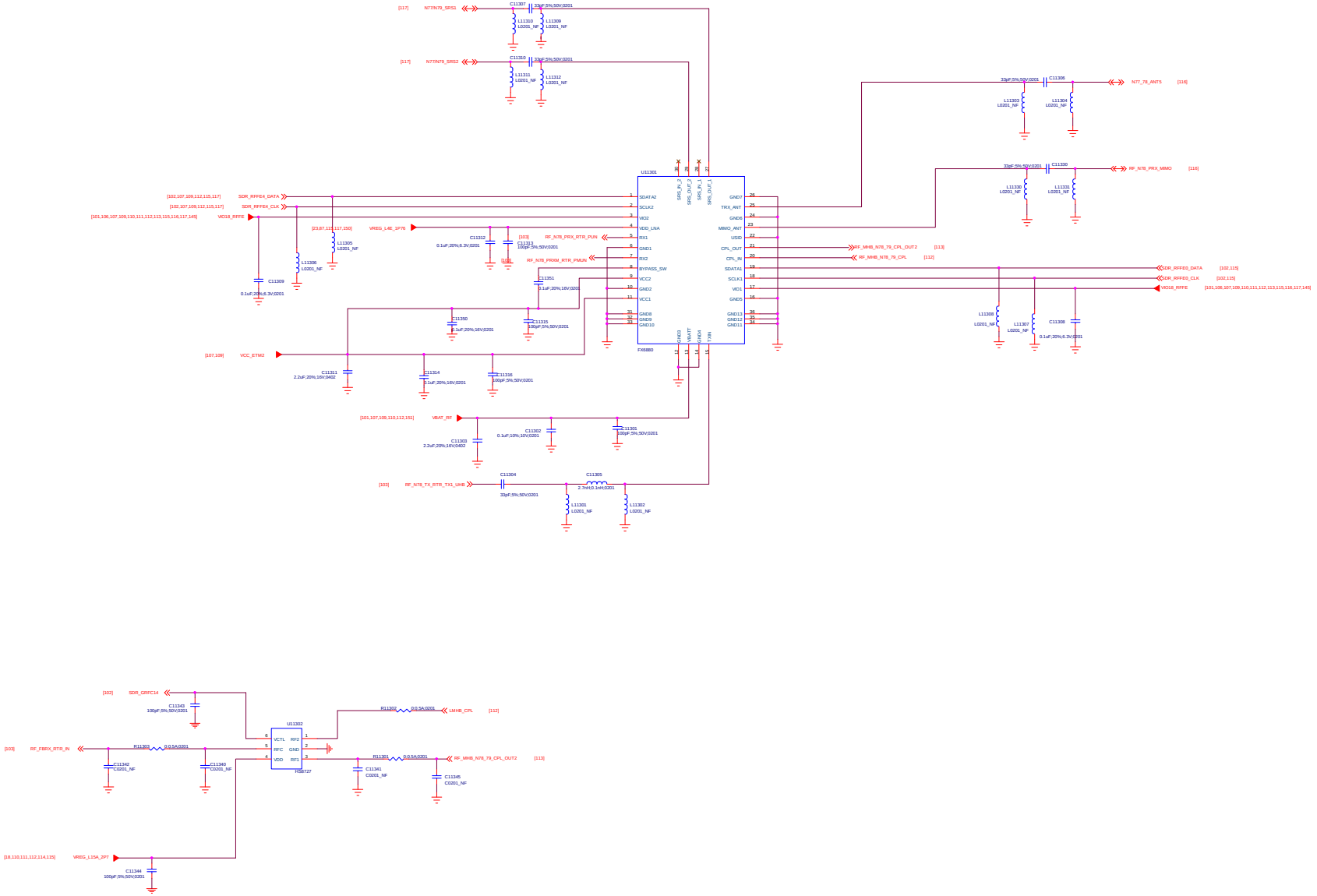

Title	Page Name = 113.N77_78 TRX	REV: V10	
DOCUMENT NO.:	Design Name = S84350_1_16_20220216_0000		D
DEPARTMENT:	DEPARTMENT = RF	DESIGNER:	DESIGNER = Ran Kuang
Date:	Page Modify Date = Tuesday, December 07, 2021	113	of 152

MHB_DRX_MIMO

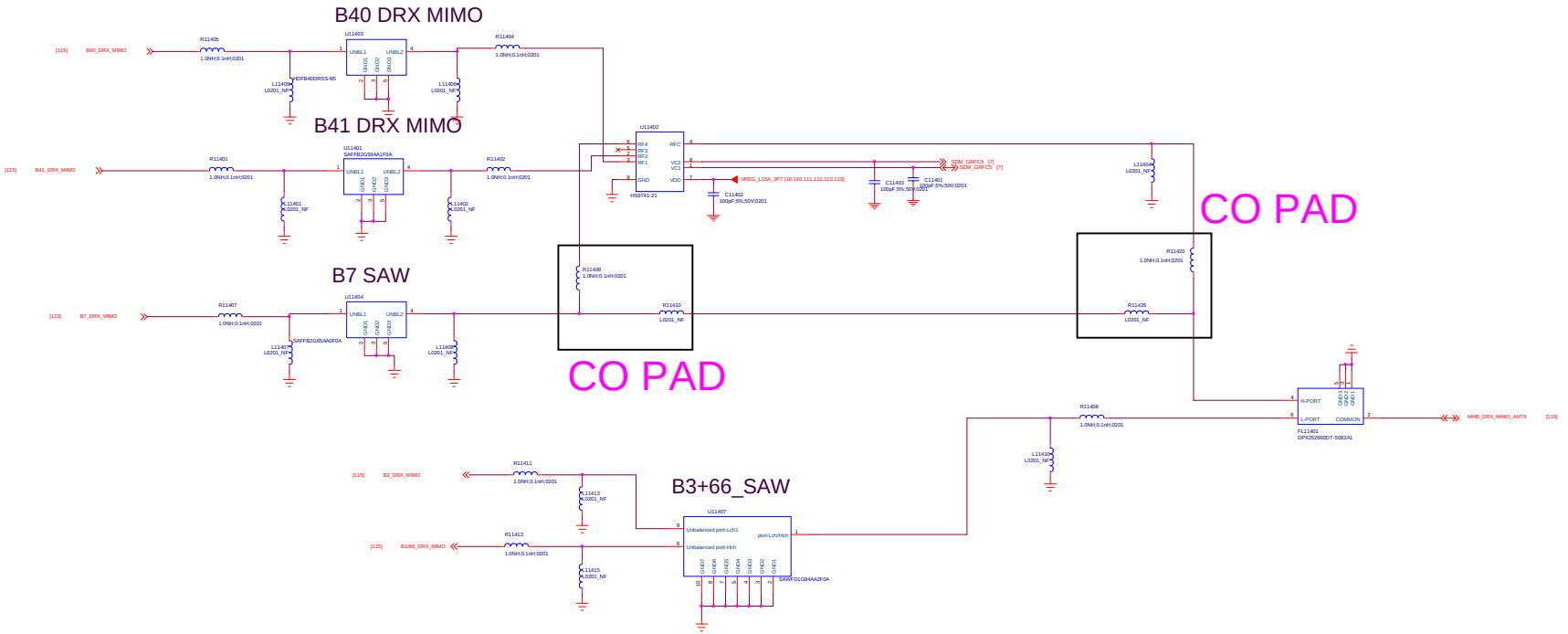

Title	Page Name = 114.MHB_DRX_MIMO
DOCUMENT NO.:	Design Name = 594350_1_10_20220216_0
DEPARTMENT:	DEPARTMENT = RF
DESIGNER:	DESIGNER = Ren zhuang
Date:	Page Modify Date = Tuesday, December 27, 2022
	114 of 152

B1+3+32_SAW

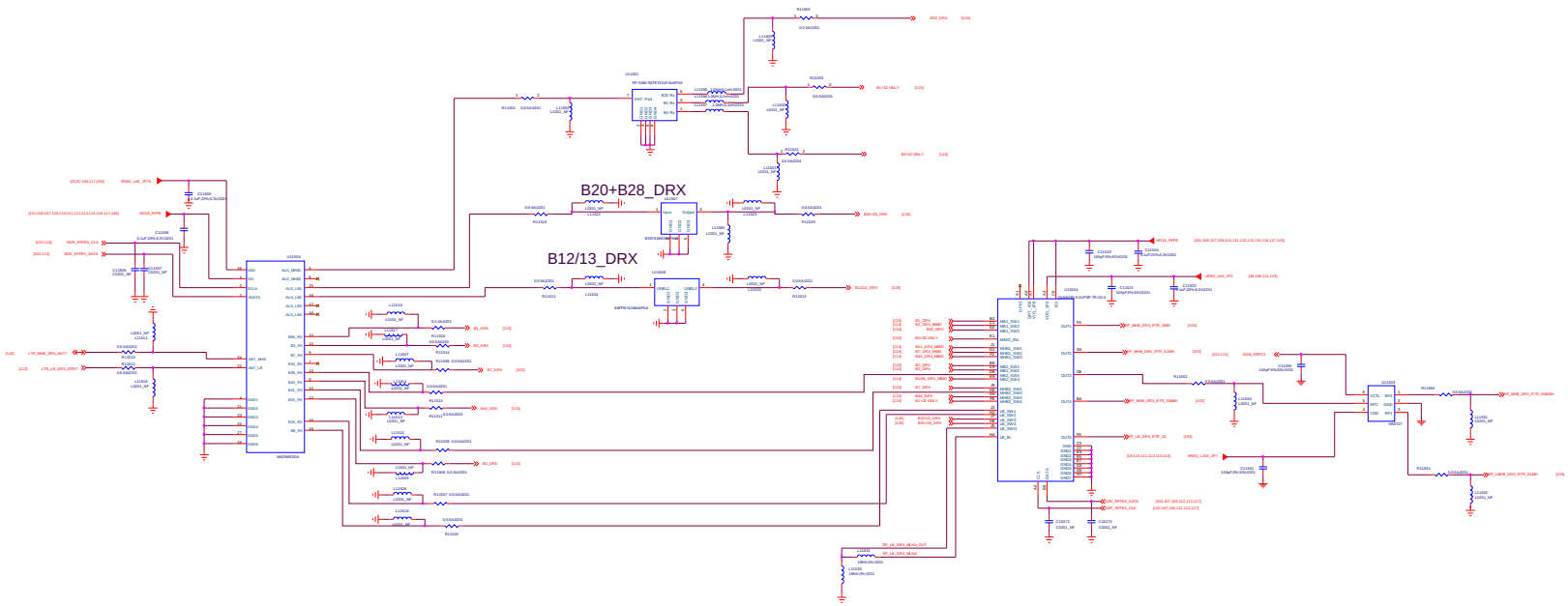

Title:	Page Name = 115.DRX	REV:	V03
DOCUMENT NO:	Design Name = SM2003_1_10_20220210_	[illegible]	X
DEPARTMENT:	DEPARTMENT = RF	DESIGNER:	DESIGNER = Rev-Eng
Date:	Page Modified = Tuesday, December 6, 2022	Sheet:	115 of 192

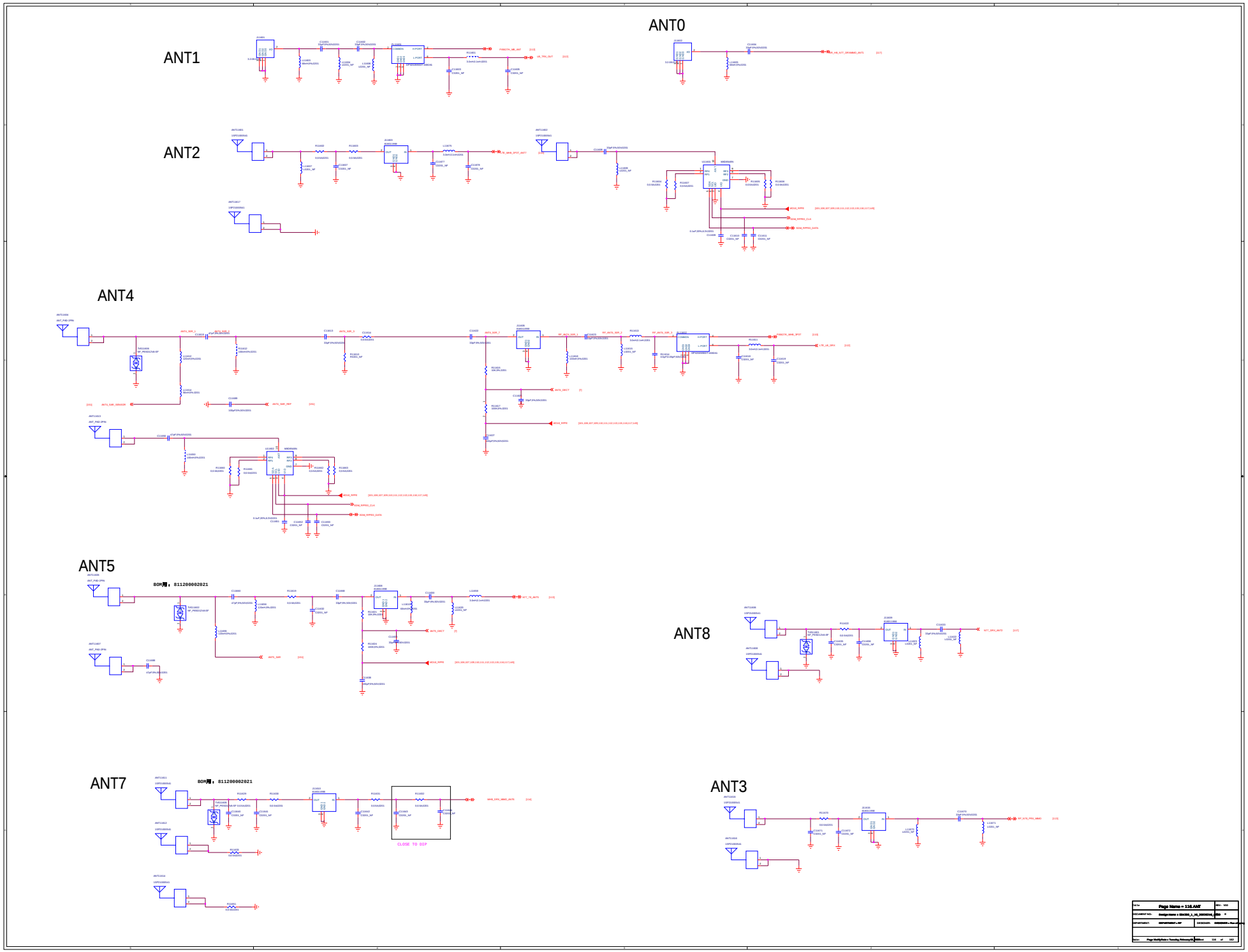
ANT0
ANT1
ANT2
ANT4
ANT5
BOM用：811200002021
ANT8
ANT7
BOM用：811200002021
CLOSE TO DIP
ANT3
Page Name = 116.ANT
DOCUMENT NO:
DEPARTMENT:
DESIGNER:
Date:
Page Modify Date = Tuesday, February 28, 2023
116
of
162

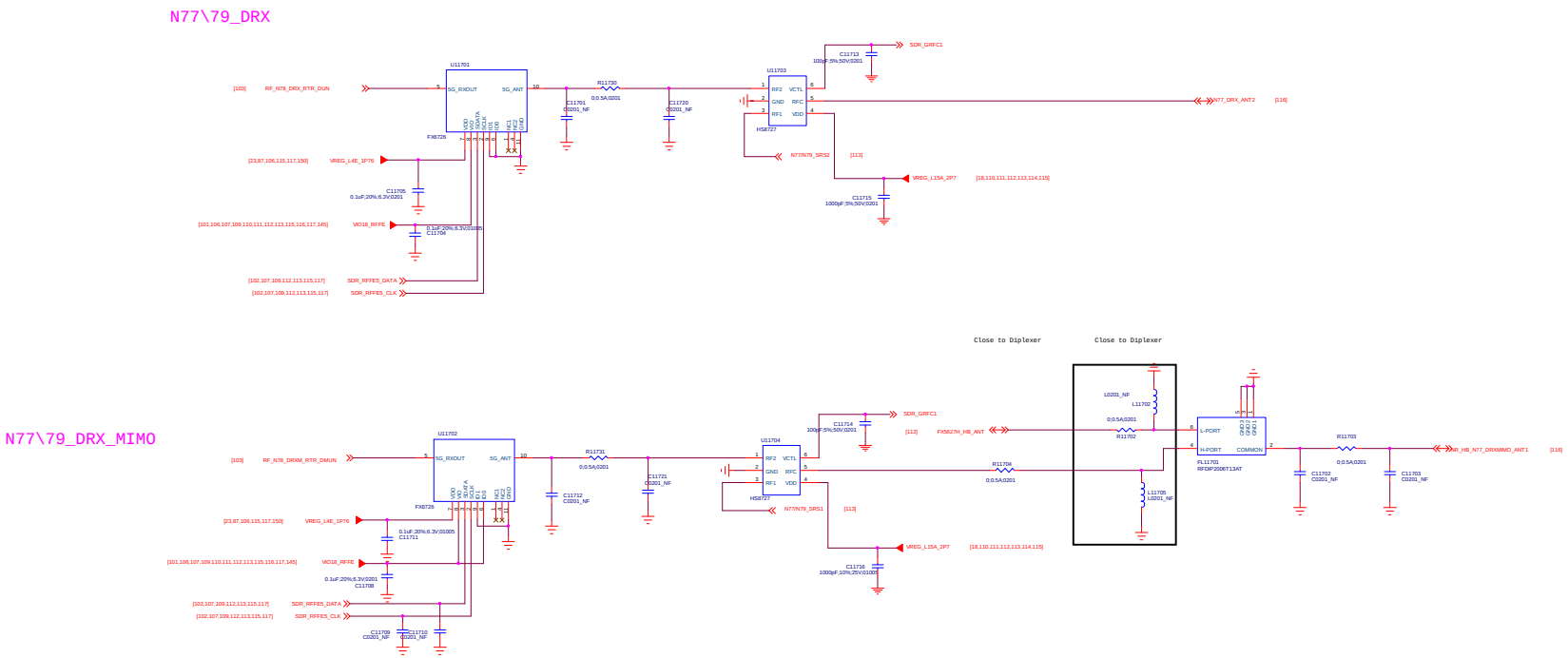

Title	Page Name = 117.N77_79_MIMO		V10
DOCUMENT NO.:	Design Name = SB4350_1_16_20220216_0200		D
DEPARTMENT:	DEPARTMENT = RF	DESIGNER:	DESIGNER = Ren Kuang
Date:	Page Modify Date = Tuesday, December 02,2008	117 of 152	

REVISIONS			
LTR	DESCRIPTION	DATE	APPROVED
A	INITIAL RELEASE		

Title	141.Reserved
DOCUMENT NO.:	SB4350_1_16_20230216_0959
DEPARTMENT:	RF
DESIGNER:	Xue Wei
Date:	Tuesday, December 07, 2021
Sheet	141 of 152

VERSION	EDITED BY	LAST EDIT DATE
1	LAST_EDITOR	2-23-2007_10:06

144.Connectivity_ANT

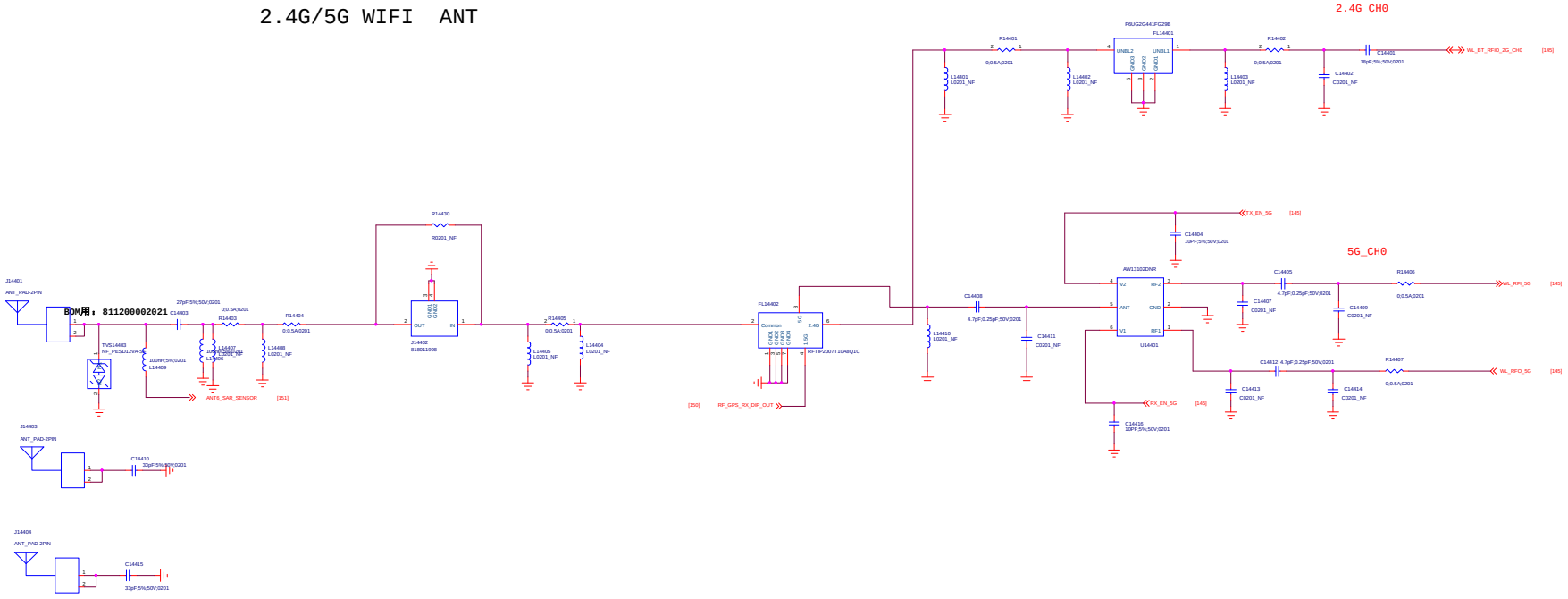

Title	REV: V10
DOCUMENT NO.: Design Name = S84350_1_16_20220216	SIZE: D
DEPARTMENT: DEPARTMENT = RF_XI'an	DESIGNER: DESIGNER = XA0616
WINGTECH	
Date: Page Modify Date = Tuesday, January 04, 2022	144 of 152

145.Connectivity_WCN3988

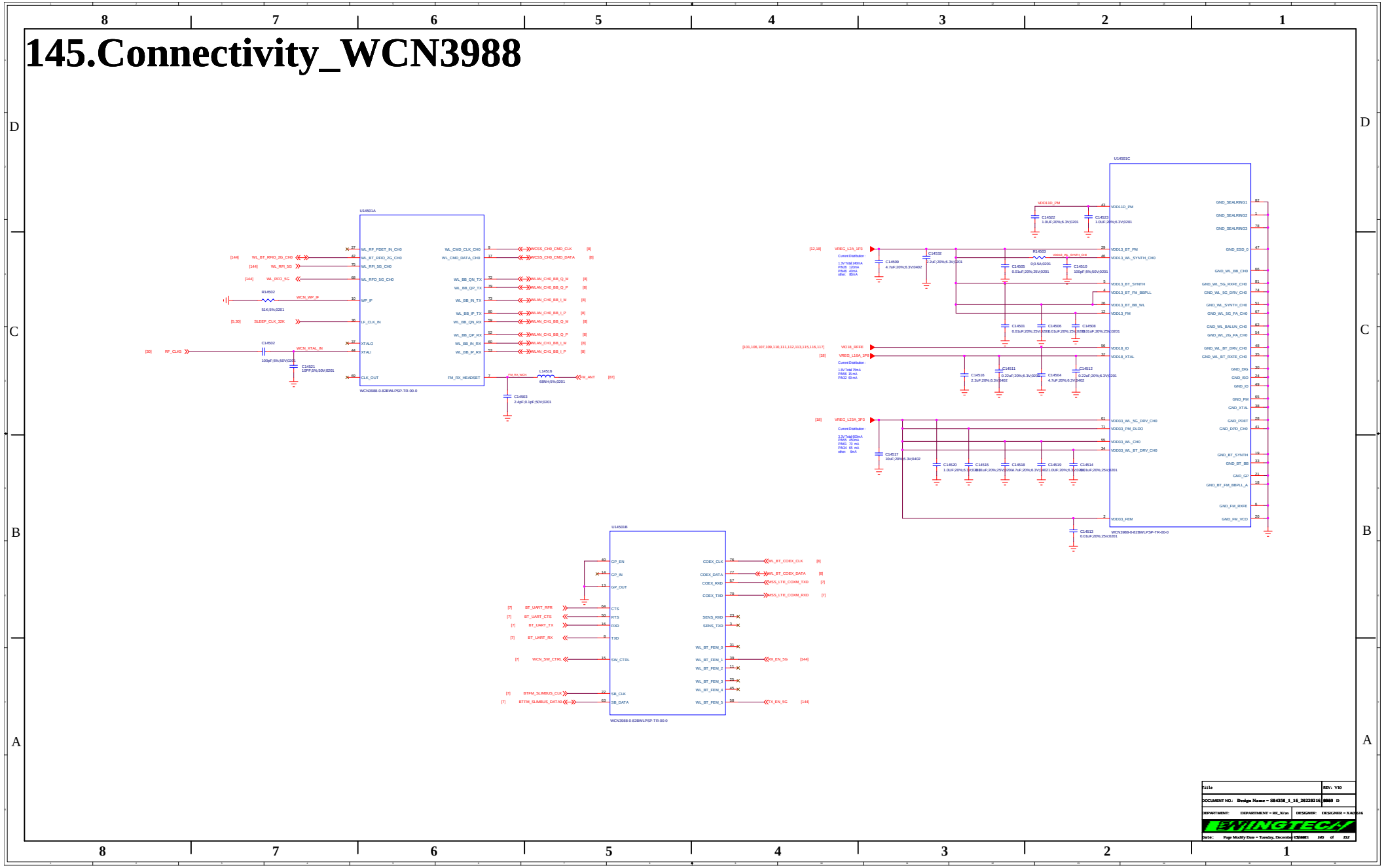

Title	REV: V10
DOCUMENT NO.: Design Name = S84350_1_16_20220216_0000 D	
DEPARTMENT: DEPARTMENT = RF_XI'an	DESIGNER: DESIGNER = XA0616
Date: Page Modify Date = Tuesday, December 05, 2021	145 of 152

150.GPS

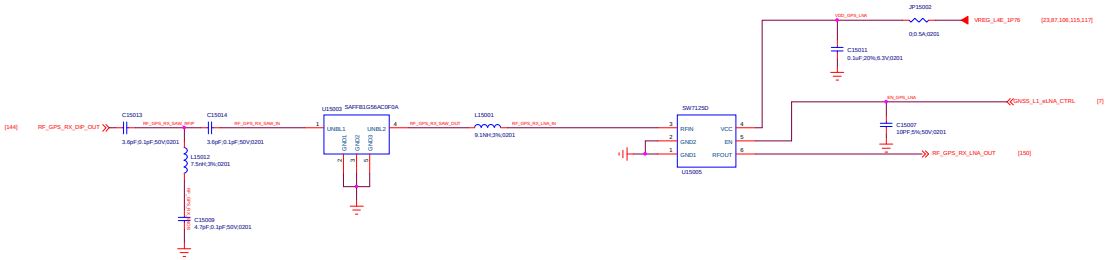

CLOSE TO GPS IC

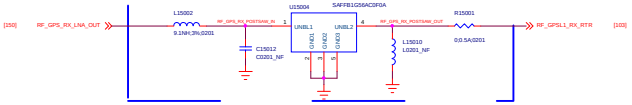

Title	REV: V10
DOCUMENT NO.: Design Name = S84350_1_16_20220216	SIZE: D
DEPARTMENT: DEPARTMENT = RF_XTAL	DESIGNER: DESIGNER = XADS16
Date: Page Modify Date = Tuesday, December 06, 2022	SHEET 150 of 152

151.Sar_sensor

REVISIONS			
LTR	DESCRIPTION	DATE	APPROVED
A	INITIAL RELEASE		

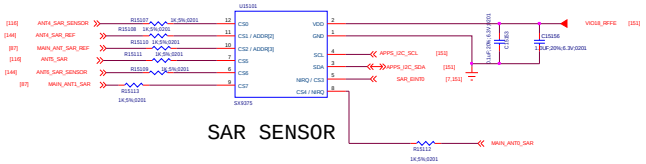

SAR SENSOR

SAR_Control & Pull-up

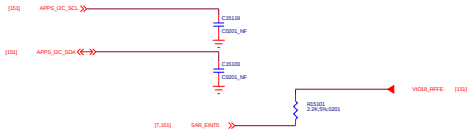

Title	Page Name = 151.Sar_sensor	REV: V02
DOCUMENT NO:	[illegible]	Custom
DEPARTMENT:	[illegible] DESIGNER = [illegible]	
Date:	[illegible]	151 of 152

VERSION	EDITED BY	LAST EDIT DATE
1	LAST_EDITOR	2-23-2007_10:06

NFC Indication

NFC

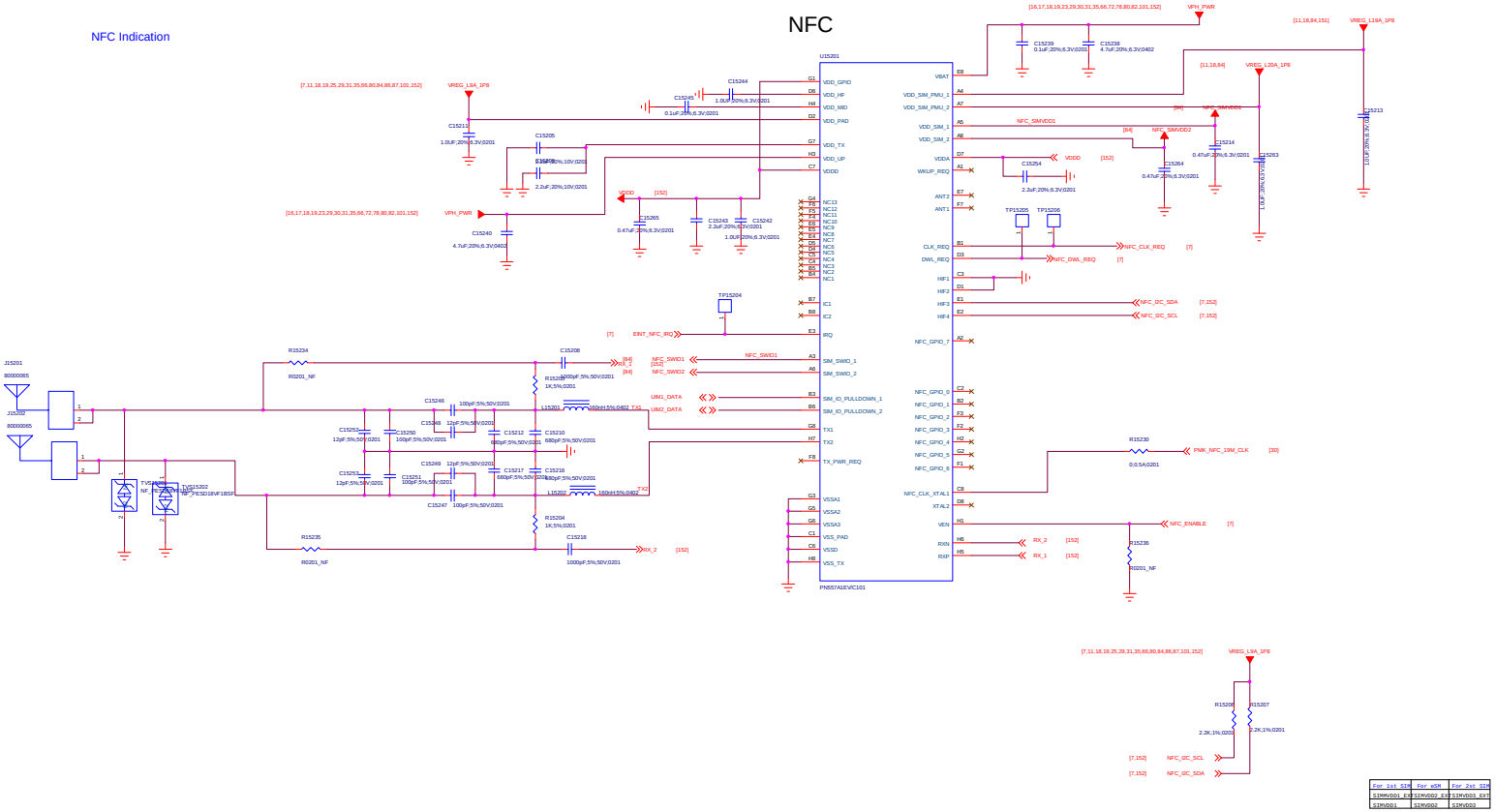

For 1st SIM	For eSM	For 2st SIM
SIMHVDD1_EXT	SIMVDD2_EXT	SIMHVDD1_EXT
SIMVDD1	SIMVDD2	SIMVDD1

Title: 152_NFC_PN557		REV: V10
DOCUMENT NO.: [illegible]		Size: D
DEPARTMENT: WINGTECH-SH	DESIGNER: liulonglei	
Date: Tuesday, December 21, 2021	Sheet 152 of 152	