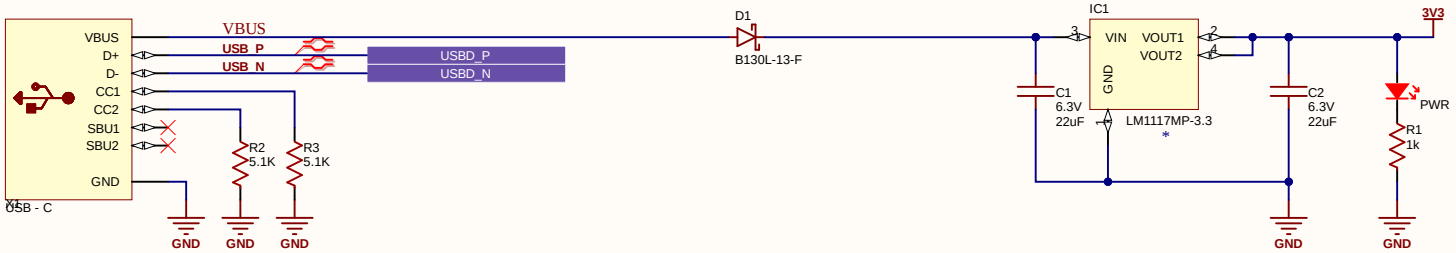

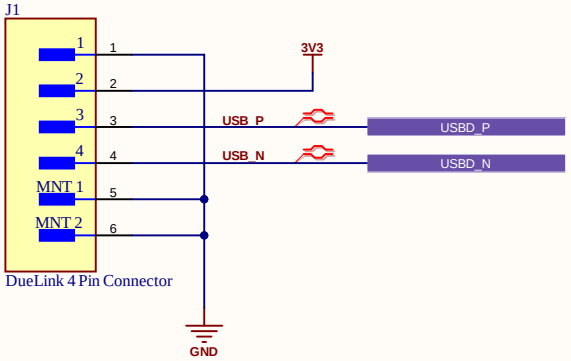

FID1 Fiducial 40 Mil

FID2 Fiducial 40 Mil

FID3 Fiducial 40 Mil

Title: *USB Hook*		
Part #: GDL-ADUSBHOOK-A		
Revision: A	Date: 10/27/2025	Sheet 1 of 1

©2025 GHI Electronics, LLC - Michigan, USA