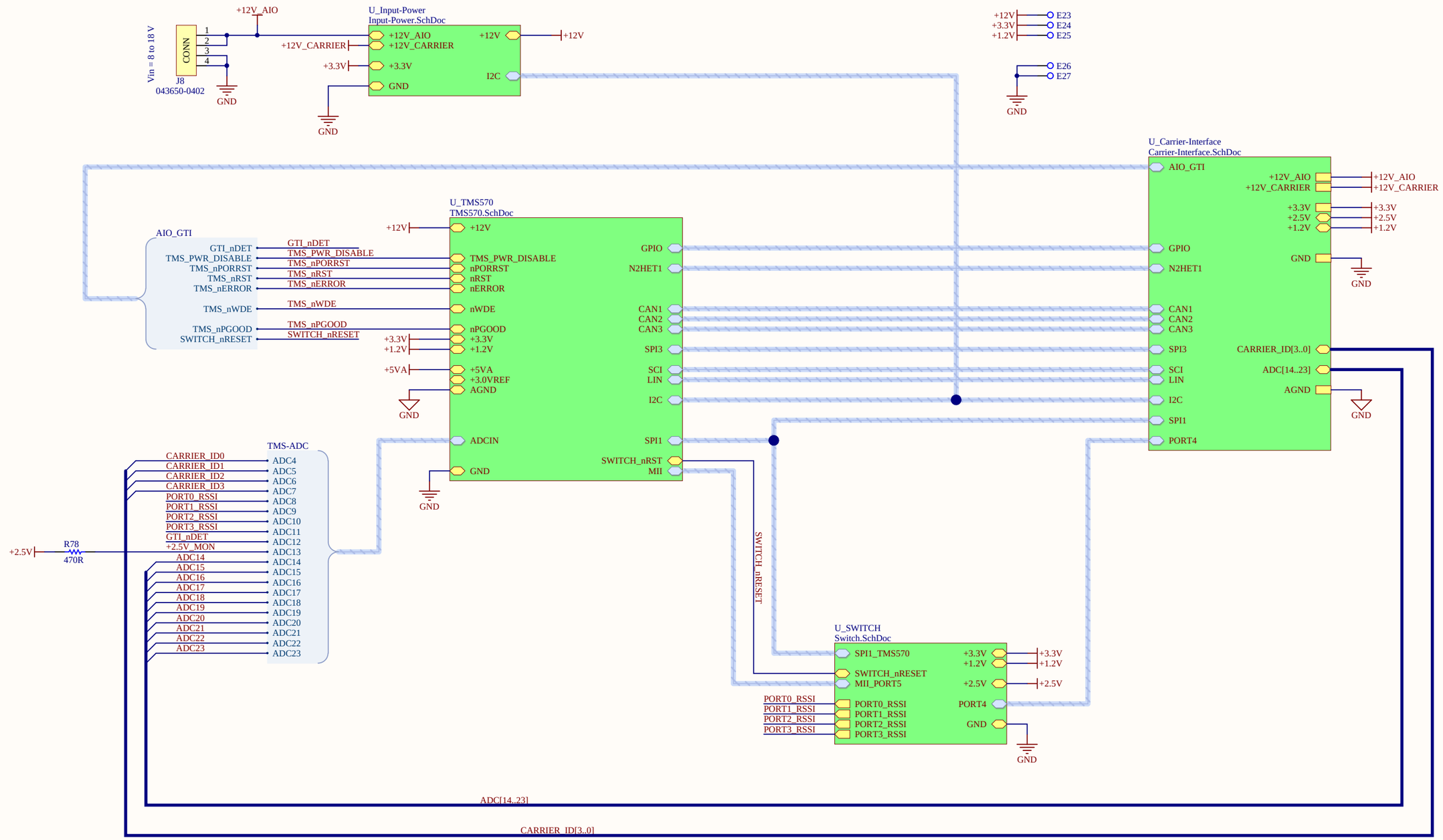

Makani Logo

Sheet Title: *Top Level*		**Makani Project**
Project Title: *AIO_Module.PrjPCB*		*Google Inc.* *2175 Monarch St.* *Alameda CA, 94501* *USA*
Size: Tabloid	Number:	Revision:
Date: 2/6/2018	Time: 2:30:47 PM	Sheet 1 of 14
Author: EAC	File: Top-Level.SchDoc	

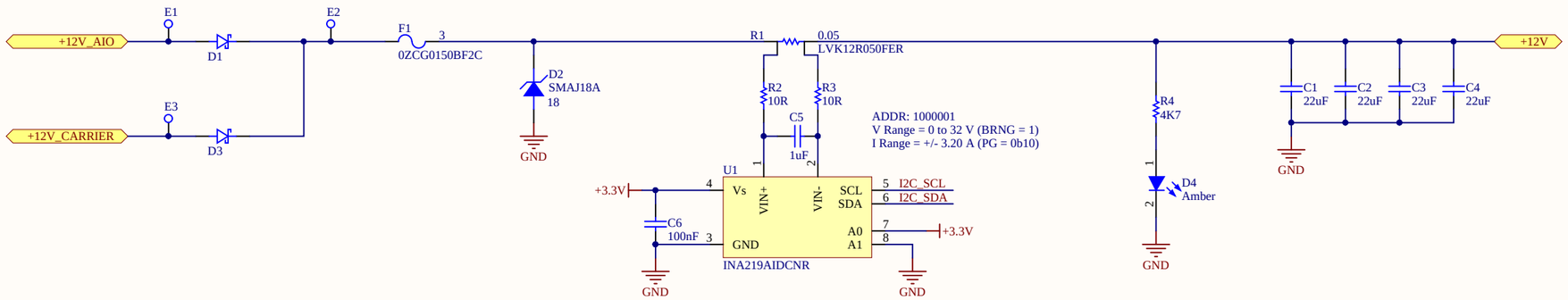

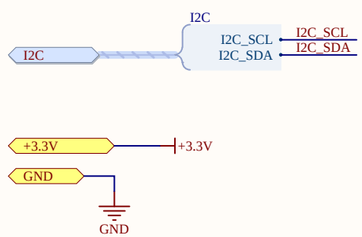

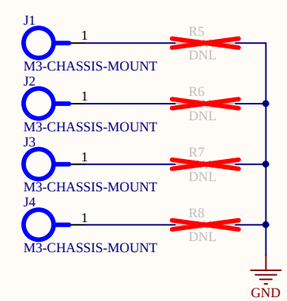

Sheet Title: *Input Power*			**Makani Project**
Project Title: *AIO_Module.PrjPCB*			*Google Inc.* *2175 Monarch St.* *Alameda CA, 94501* *USA*
Size: Tabloid	Number:	Revision:	
Date: 2/6/2018	Time: 2:30:47 PM	Sheet 2 of 14	
Author: EAC	File: Input-Power.SchDoc		

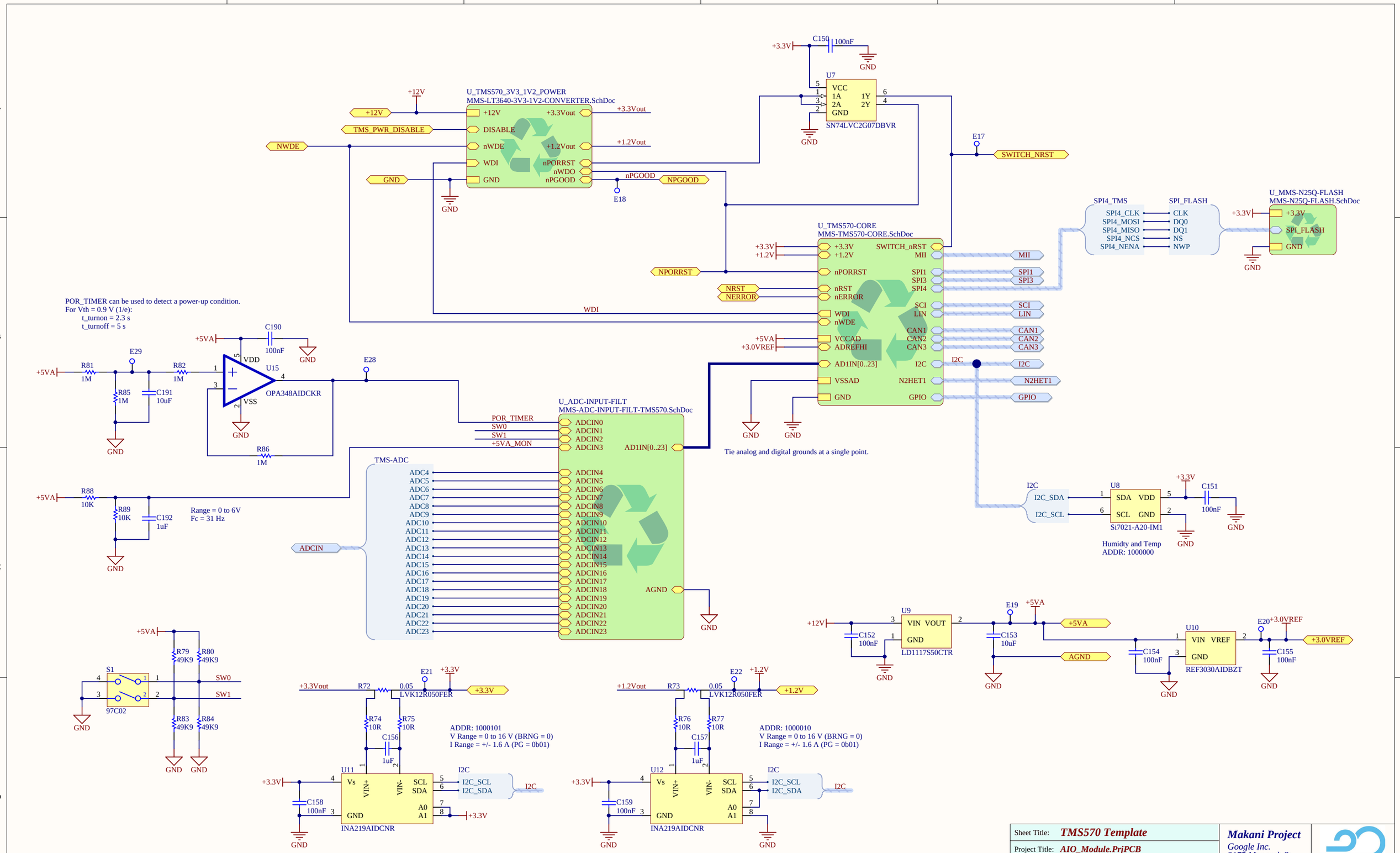

Sheet Title: *TMS570 Template*		**Makani Project**
Project Title: *AIO_Module.PrjPCB*		*Google Inc.* *2175 Monarch St.* *Alameda CA, 94501* *USA*
Size: Tabloid	Number:	Revision:
Date: 2/6/2018	Time: 2:30:47 PM	Sheet 3 of 14
Author: EAC	File: TMS570.SchDoc	

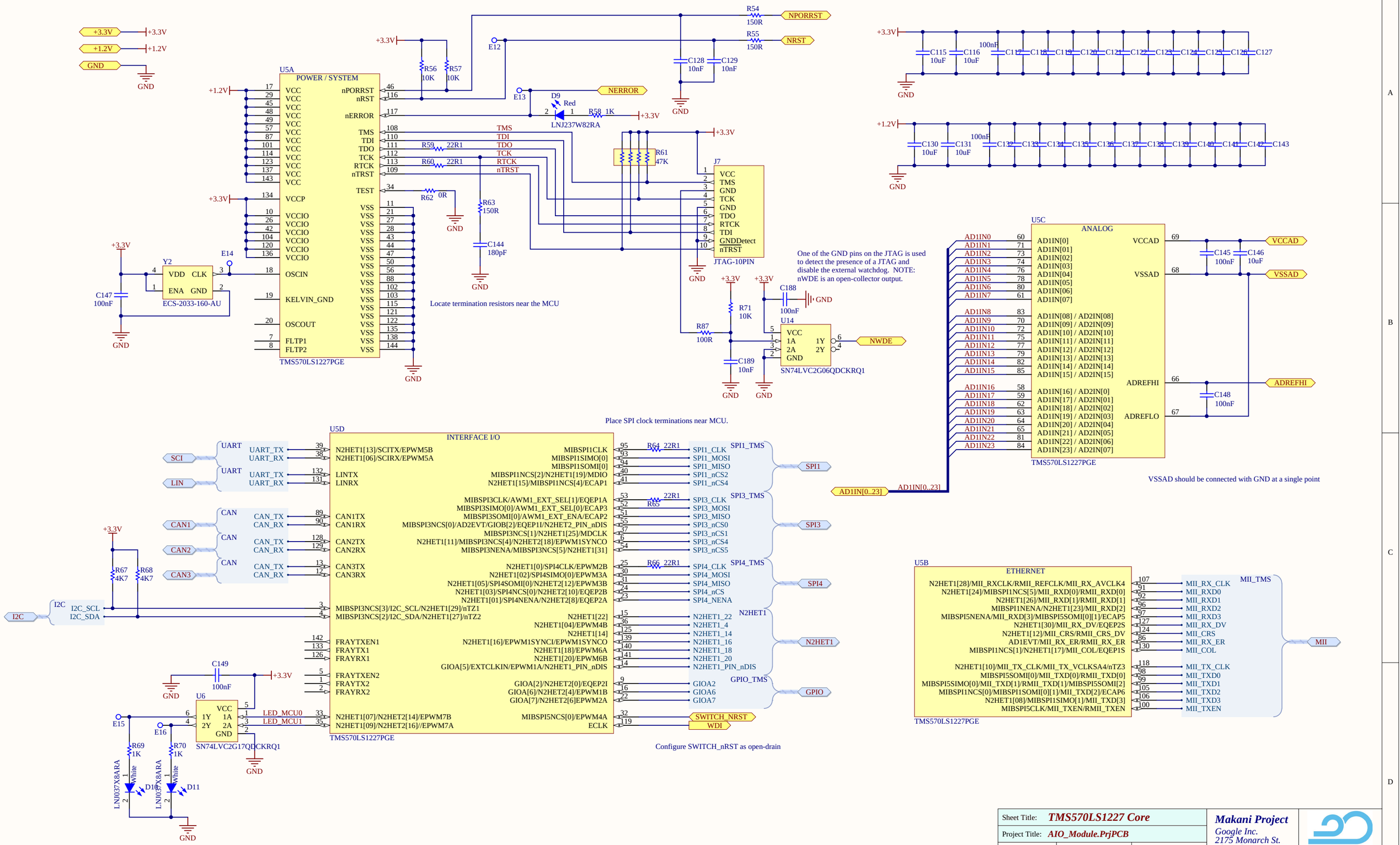

Sheet Title:	TMS570LS1227 Core
Project Title:	AIO_Module.PrjPCB
Size: Tabloid	Number: / Revision:
Date: 2/6/2018	Time: 2:30:47 PM / Sheet 4 of 14
Author: EAC	File: MMS-TMS570-CORE.SchDoc

Makani Project
Google Inc.
2175 Monarch St.
Alameda CA, 94501
USA

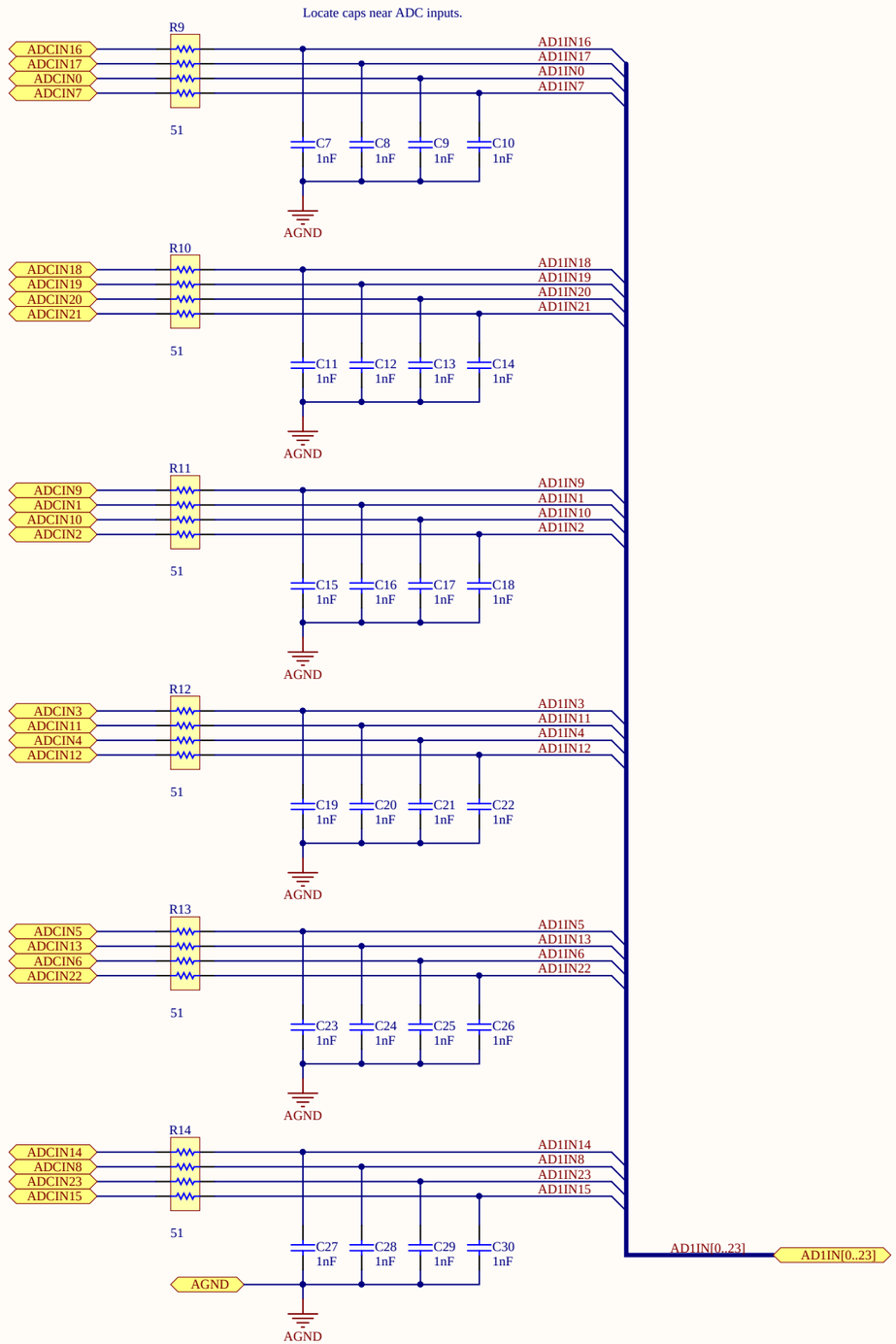

Sheet Title:	***TMS570 ADC INPUT FILTER***		***Makani Project*** *Google Inc. 2175 Monarch St. Alameda CA, 94501 USA*
Project Title:	***AIO_Module.PrjPCB***		
Size: Tabloid	Number:	Revision:	
Date: 2/6/2018	Time: 2:30:48 PM	Sheet 5 of 14	
Author: EAC	File: MMS-ADC-INPUT-FILT-TMS570.SchDoc		

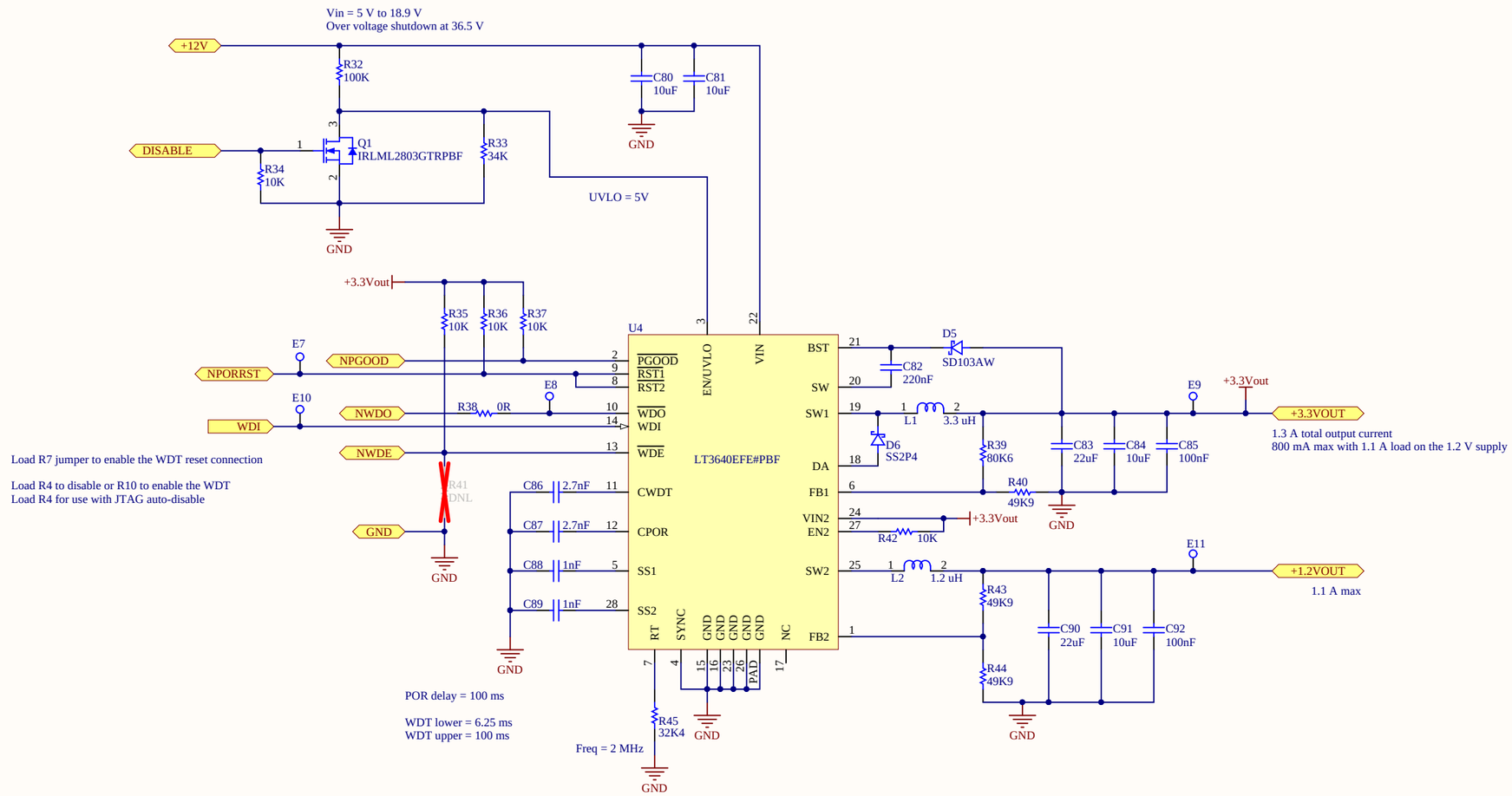

Sheet Title: *LT3640 3V3 1V2*			***Makani Project*** *Google Inc. 2175 Monarch St. Alameda CA, 94501 USA*
Project Title: *AIO_Module.PrjPCB*			
Size: Tabloid	Number:	Revision:	
Date: 2/6/2018	Time: 2:30:48 PM	Sheet 6 of 14	
Author: EAC	File: MMS-LT3640-3V3-1V2-CONVERTER.SchDoc		

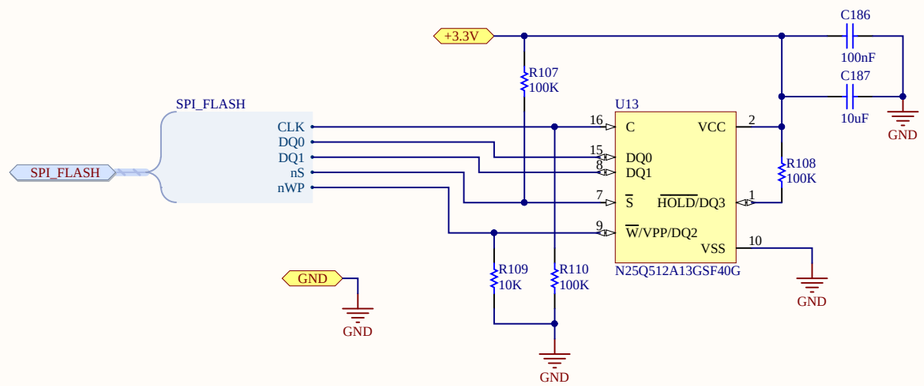

Sheet Title: *SPI NOR Flash*			***Makani Project*** *Google Inc. 2175 Monarch St. Alameda CA, 94501 USA*
Project Title: *AIO_Module.PrjPCB*			
Size: Tabloid	Number:	Revision:	
Date: 2/6/2018	Time: 2:30:48 PM	Sheet 7 of 14	
Author: EAC	File: MMS-N25Q-FLASH.SchDoc		

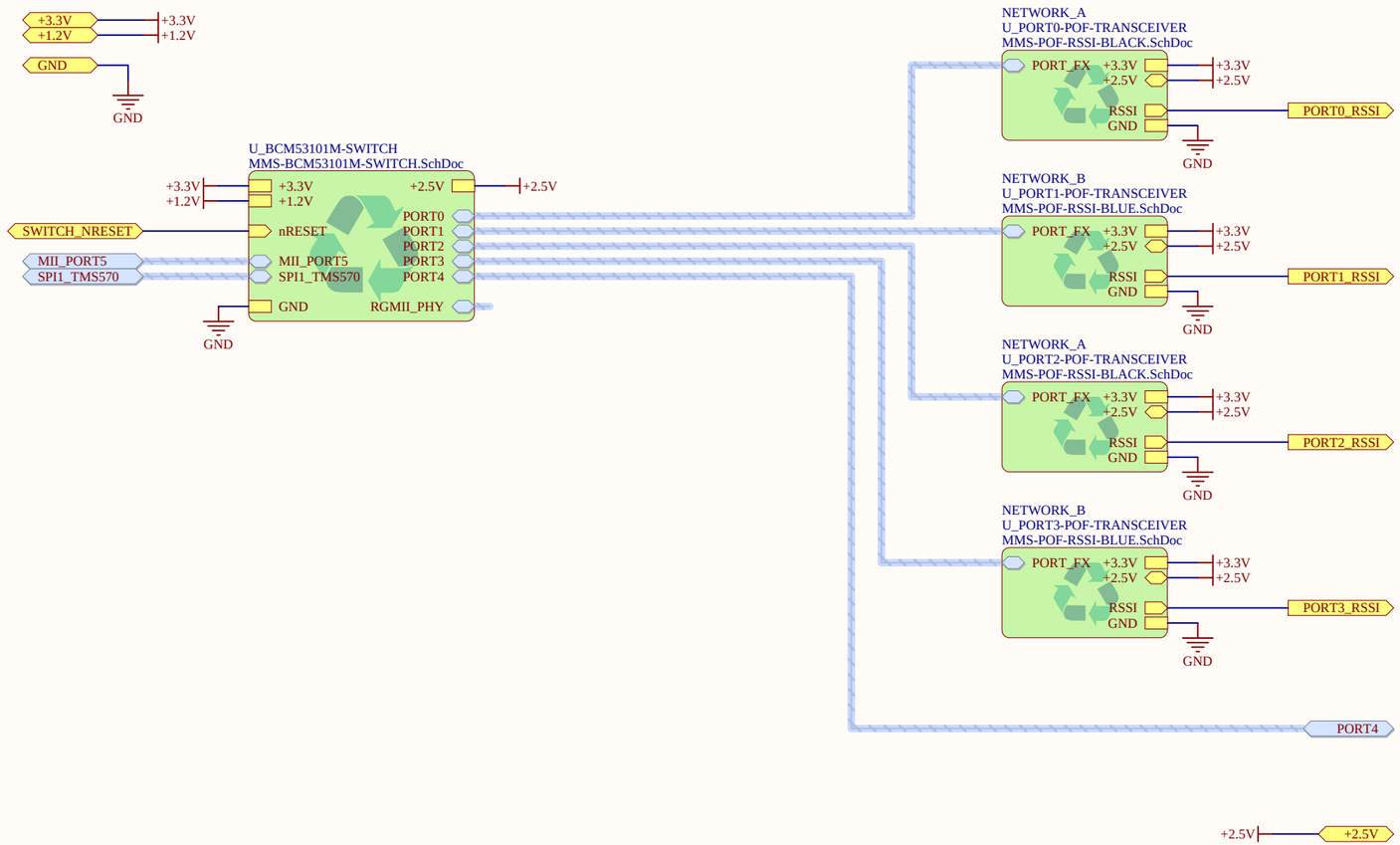

Sheet Title: *Switch and transceivers*		**Makani Project**
Project Title: *AIO_Module.PrjPCB*		*Google Inc.* *2175 Monarch St.* *Alameda CA, 94501* *USA*
Size: Tabloid	Number:	Revision:
Date: 2/6/2018	Time: 2:30:48 PM	Sheet 8 of 14
Author: EAC	File: Switch.SchDoc	

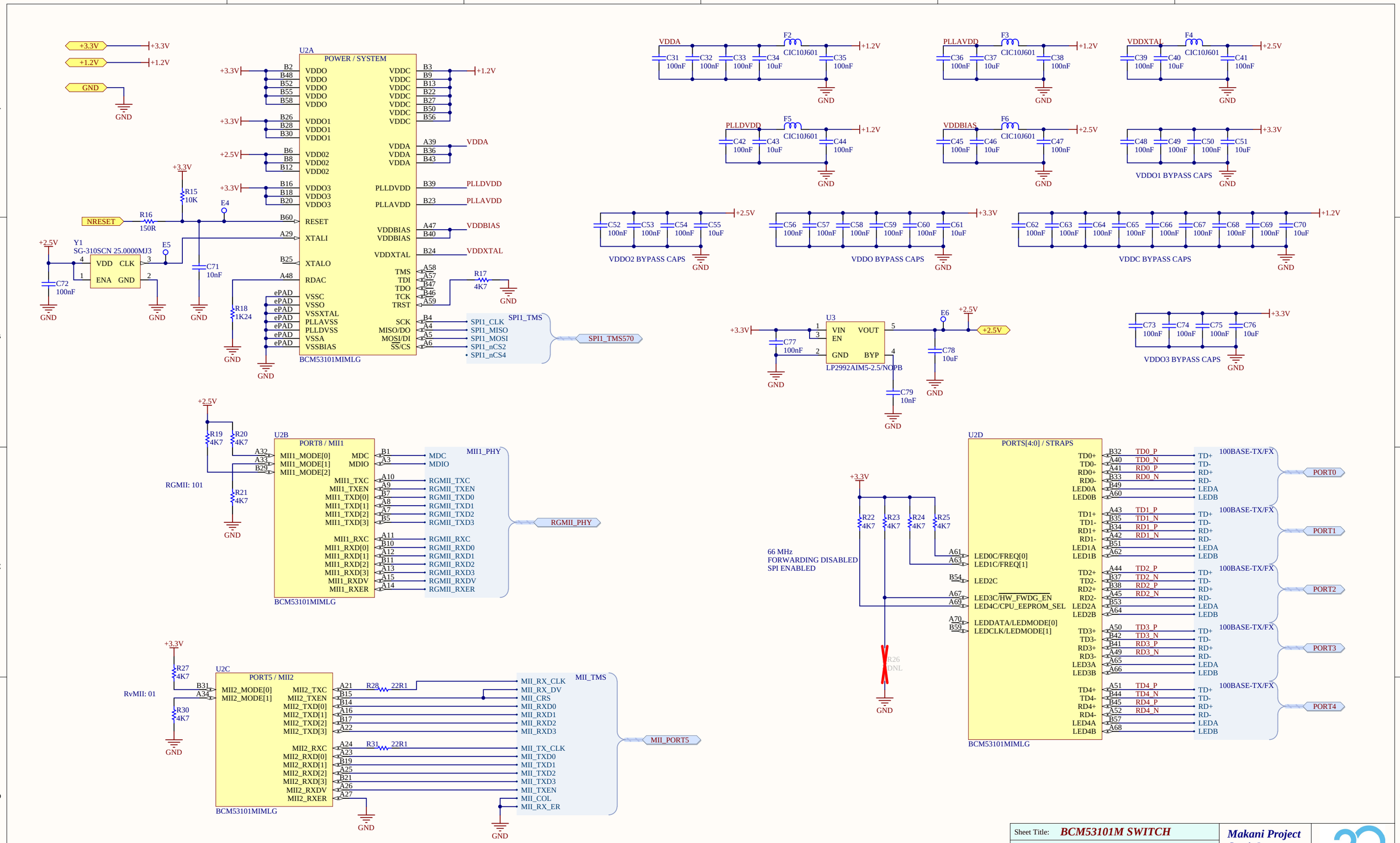

Sheet Title: **BCM53101M SWITCH**		**Makani Project**
Project Title: **AIO_Module.PrjPCB**		Google Inc. 2175 Monarch St. Alameda CA, 94501 USA
Size: Tabloid	Number:	Revision:
Date: 2/6/2018	Time: 2:30:48 PM	Sheet 9 of 14
Author: EAC	File: MMS-BCM53101M-SWITCH.SchDoc	

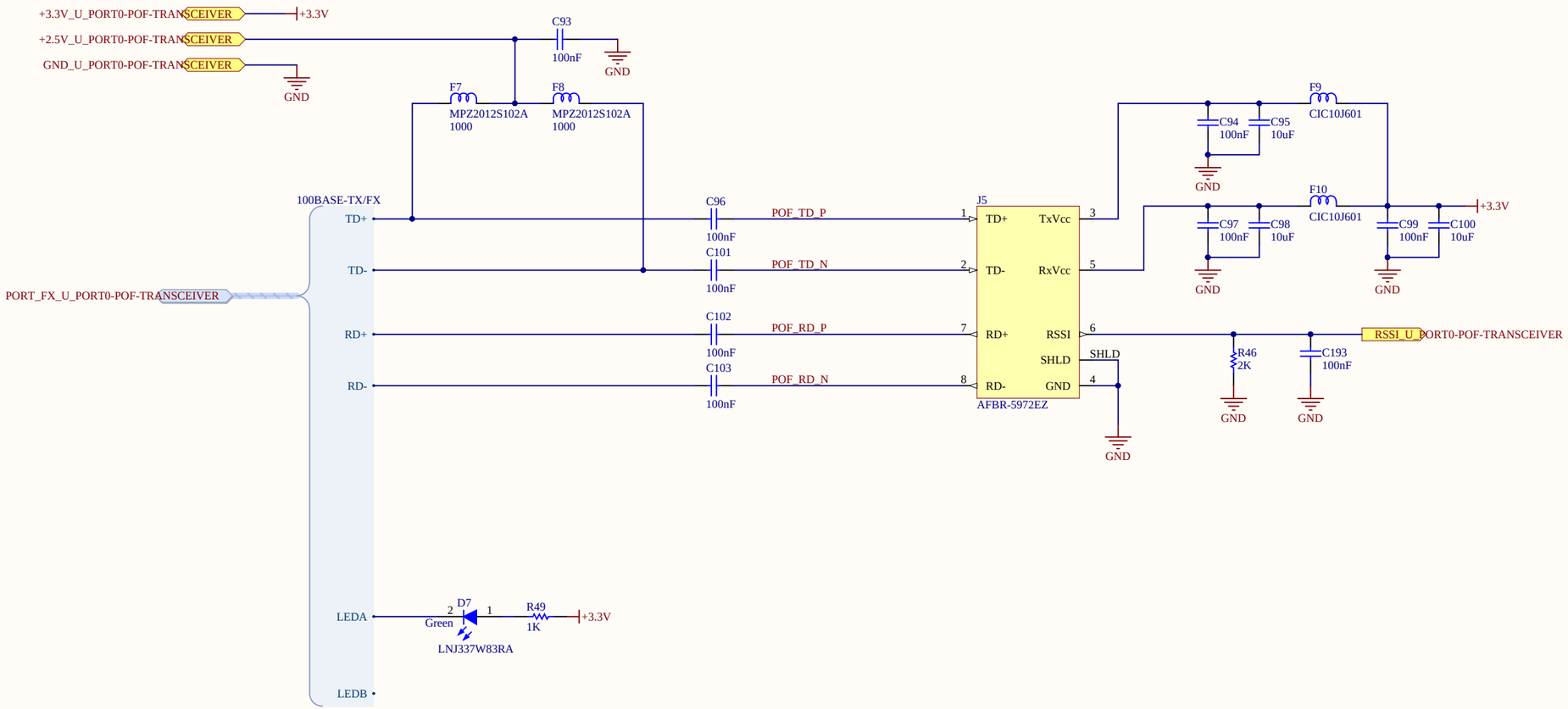

Sheet Title: **POF FX Transceiver**		**Makani Project**
Project Title: **AIO_Module.PrjPCB**		Google Inc. 2175 Monarch St. Alameda CA, 94501 USA
Size: Tabloid	Number:	Revision:
Date: 2/6/2018	Time: 2:30:49 PM	Sheet 10 of 14
Author: EAC	File: MMS-POF-RSSI-BLACK.SchDoc	

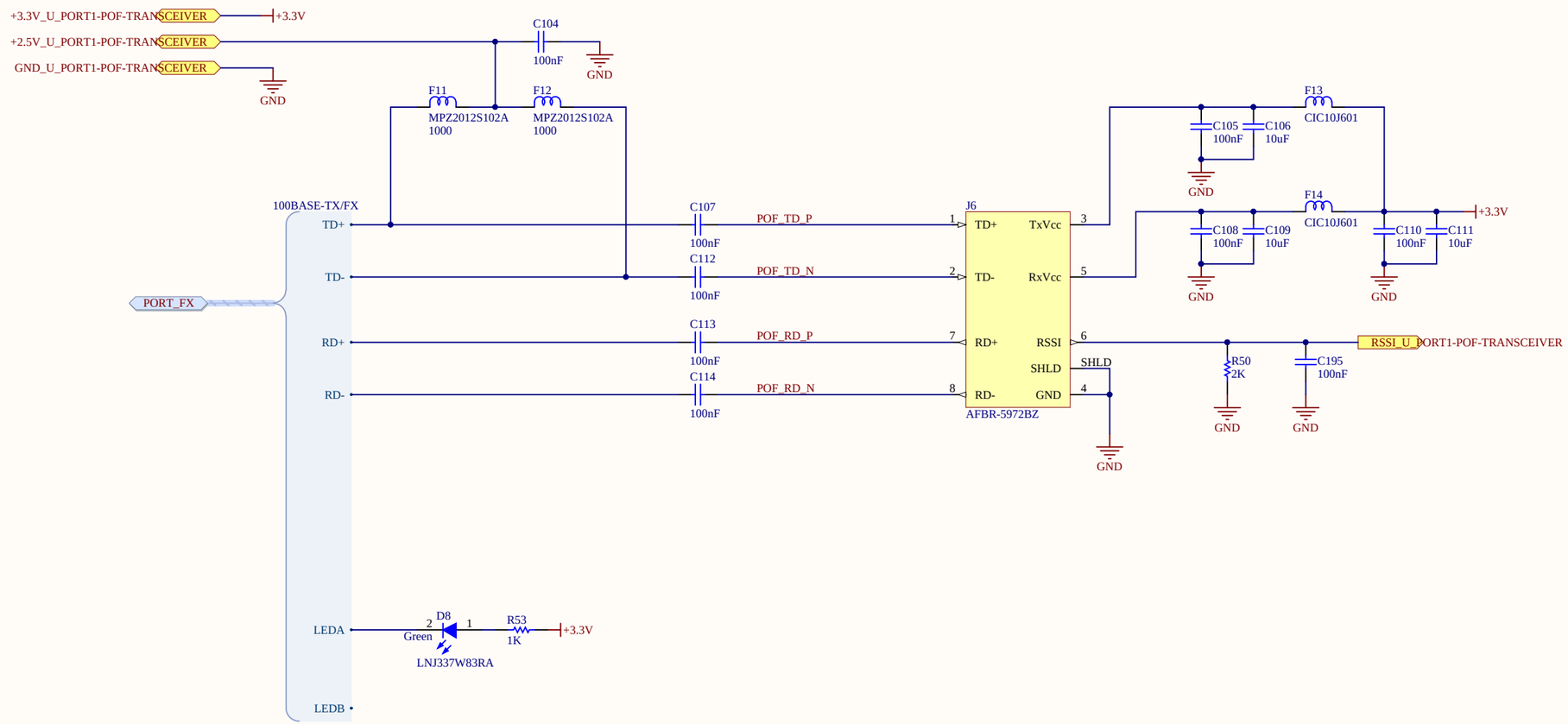

Sheet Title: *POF FX Transceiver*			**Makani Project**
Project Title: *AIO_Module.PrjPCB*			*Google Inc.* *2175 Monarch St.* *Alameda CA, 94501* *USA*
Size: Tabloid	Number:	Revision:	
Date: 2/6/2018	Time: 2:30:49 PM	Sheet 11 of 14	
Author: EAC	File: MMS-POF-RSSI-BLUE.SchDoc		

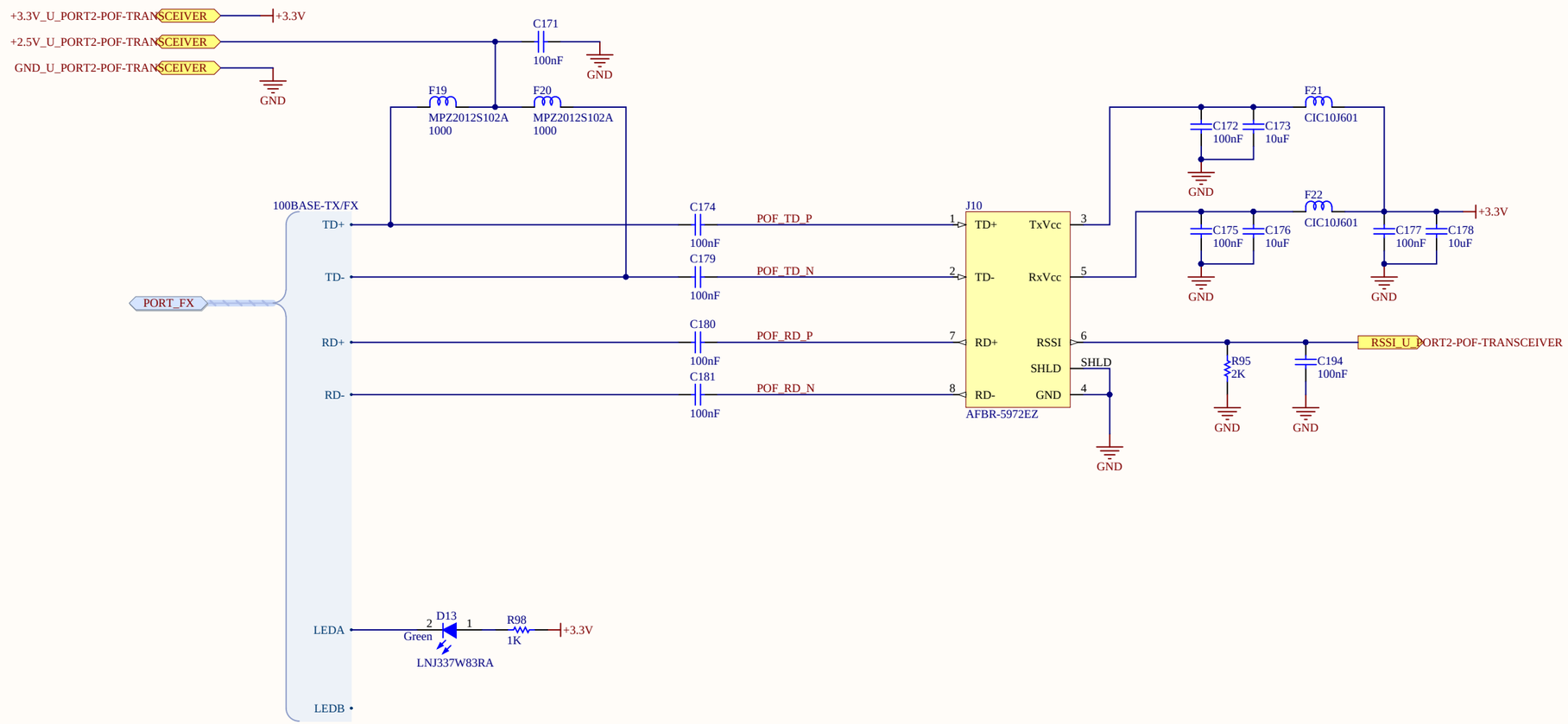

Sheet Title: *POF FX Transceiver*			**Makani Project**
Project Title: *AIO_Module.PrjPCB*			*Google Inc.* *2175 Monarch St.* *Alameda CA, 94501* *USA*
Size: Tabloid	Number:	Revision:	
Date: 2/6/2018	Time: 2:30:49 PM	Sheet 12 of 14	
Author: EAC	File: MMS-POF-RSSI-BLACK.SchDoc		

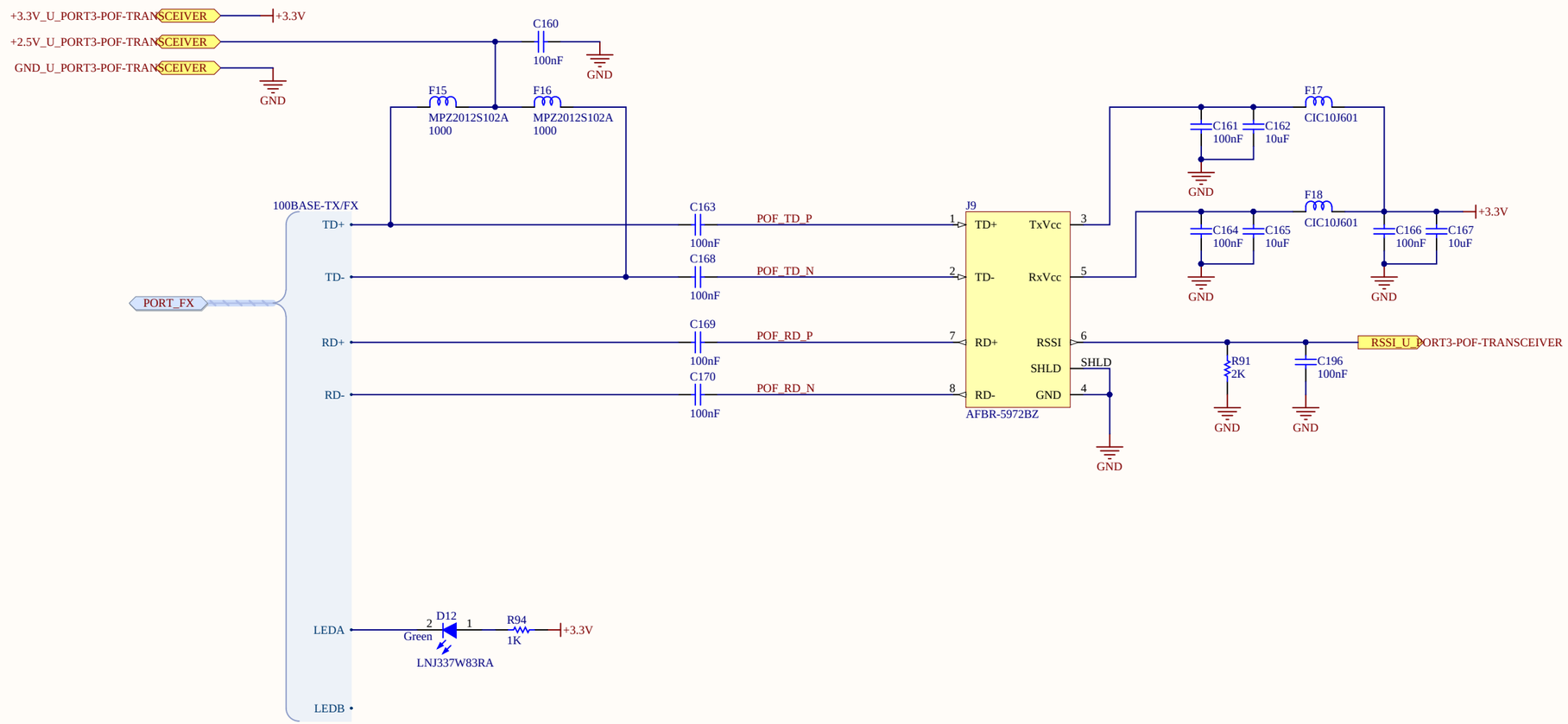

Sheet Title: *POF FX Transceiver*			**Makani Project**
Project Title: *AIO_Module.PrjPCB*			*Google Inc.* *2175 Monarch St.* *Alameda CA, 94501* *USA*
Size: Tabloid	Number:	Revision:	
Date: 2/6/2018	Time: 2:30:49 PM	Sheet 13 of 14	
Author: EAC	File: MMS-POF-RSSI-BLUE.SchDoc		

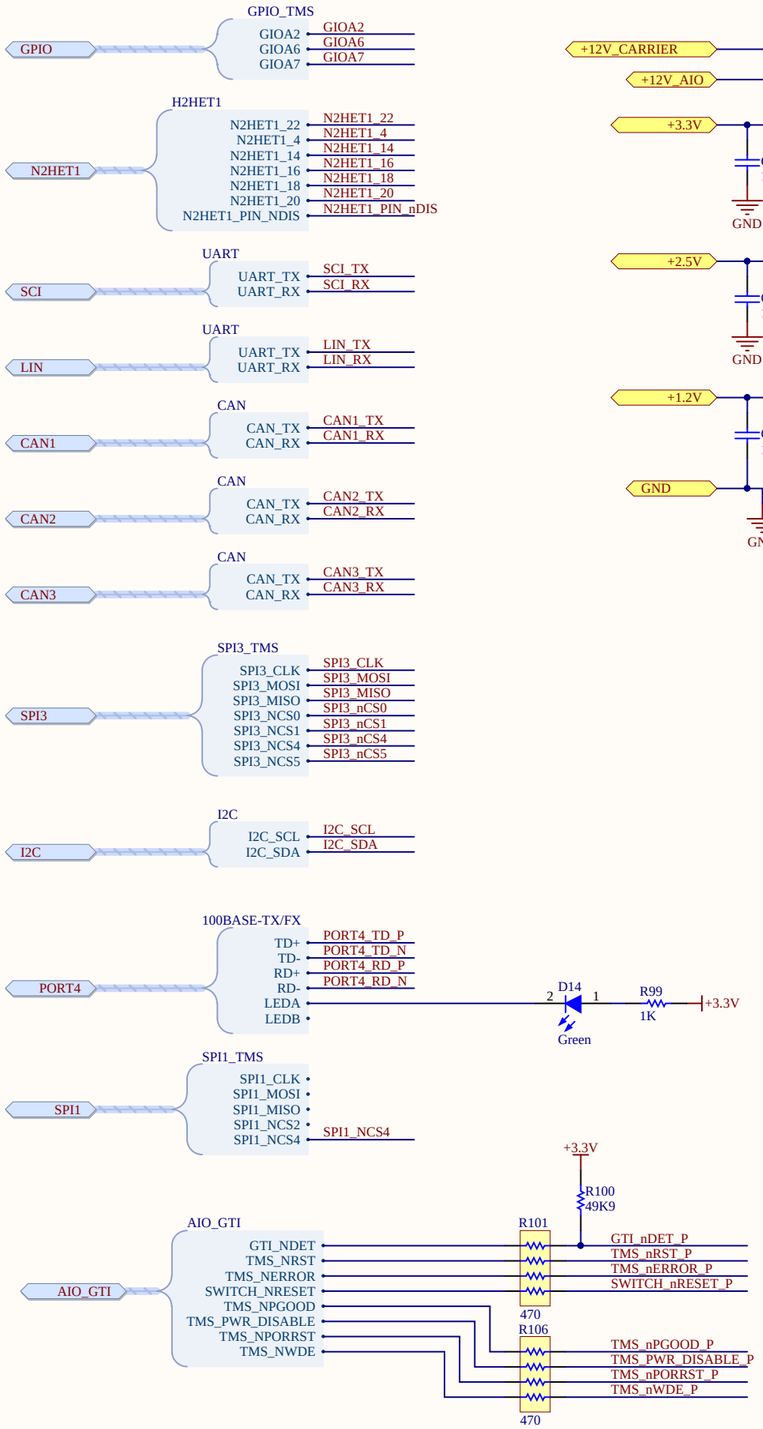

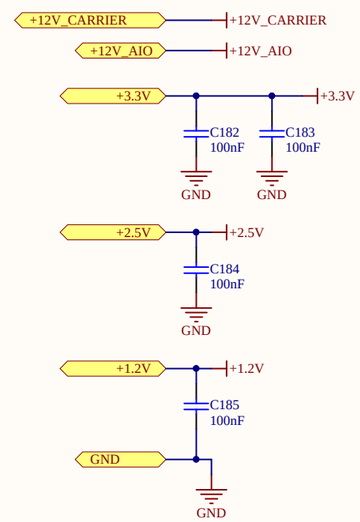

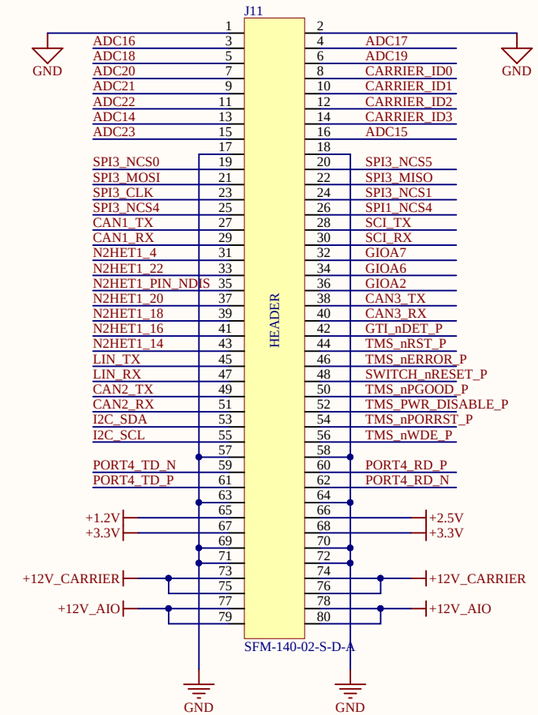

NOTES ON POWER

+1.2V: For monitoring only.
+2.5V: For PORT4 ethernet bias and monitoring only.
+3.3V: Limit current to 250 mA (needs verification).
+12V_CARRIER: Supplied by the carrier board to the AIO board.
+12V_AIO: Supplied by the AIO board to the carrier board.

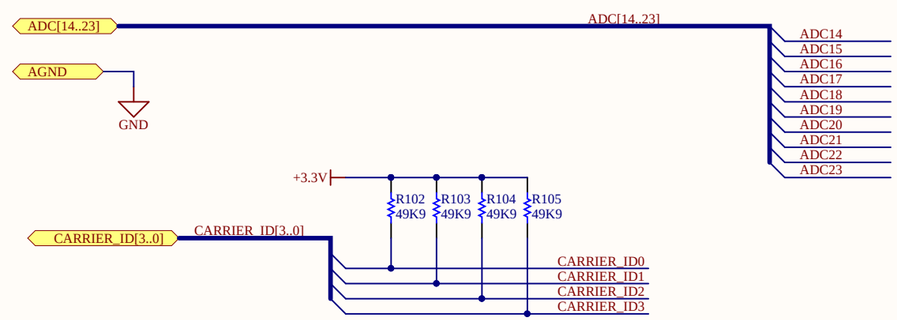

Sheet Title: *Carrier Interface*		**Makani Project**
Project Title: *AIO_Module.PrjPCB*		*Google Inc.* *2175 Monarch St.* *Alameda CA, 94501* *USA*
Size: Tabloid	Number:	Revision:
Date: 2/6/2018	Time: 2:30:49 PM	Sheet 14 of 14
Author: EAC	File: Carrier-Interface.SchDoc	