Chipcon

– Connecting Smarter

SmartRF®02 – Product line

User Manual

Rev. 2.1

SmartRF® CC1000DK Development Kit

Chipcon AS, Gaustadalléen 21, N-0349 Oslo, Norway. Support tel. +47 22 95 85 45, fax: +47 22 95 85 46.

E-mail: support@chipcon.com

Table of contents:

INTRODUCTION **3**
EVALUATION BOARD **4**
DESCRIPTION 4
LAYOUT SKETCHES, ASSEMBLY DRAWINGS AND CIRCUIT DIAGRAM 10
BILL OF MATERIALS 17
USING THE DEVELOPMENT KIT **22**
GENERAL INFORMATION 24

Introduction

The CC1000 single chip transceiver includes many features and great flexibility which makes the chip suitable for a very large number of applications and system requirements. The CC1000DK Development Kit is designed to make it very easy for the user to evaluate transceiver performance and in short time develop his own applications.

The Development Kit includes two evaluation boards with a complete CC1000 transceiver, voltage regulator and PC interface circuitry. Using the evaluation board connected to a PC running the SmartRF® Studio software, various system parameters can be changed and tested by keystrokes.

Technical features:

- RF power up to 10 mW (10 dBm) programmable in 1dB steps
- -109 dBm sensitivity for 10^{-3} bit error rate
- Logic level data input/output (Manchester coded or NRZ)
- Logic level synchronisation clock output
- RSSI output
- 10.7 MHz IF output
- Selectable RF filtering (SAW or LC)
- All set-up controlled by PC
- Selectable 3V or 4-10Vunregulated voltage supply inputs

This user manual describes how to get started with the Development Kit. You will also find detailed description of the evaluation board and advice how to develop your own applications. For details on how to use the SmartRF® Studio software please refer to the SmartRF® Studio User Manual.

Your SmartRF® CC1000DK Development Kit should contain the following items:

Evaluation Board (CC1000EB)	2 ex	
PC parallel port extension cable	2 ex	25-pin D-sub, male-female, 3m
Adapter	6 ex	SMA male-BNC female
Antenna	2 ex	50Ω, λ/4 monopole, SMA male
CC1000 samples	5 ex	
Quick Start User Manual		
SmartRF® CD-ROM		

The evaluation board includes a significant number of components for great flexibility. However, only a minor part of these components are required in an actual application. Check the datasheet for a typical application circuit.

Evaluation Board

The kit includes an Evaluation Board (CC1000EB) with the following items:

- A SmartRF® CC1000 chip.
- Necessary external surface mounted devices, SMDs, for the chip.
- Voltage regulator 4V-10V to 3V regulated voltage.
- Possibilities to apply a 3V voltage source directly (chosen by the switch on the board).
- Voltage-level interface circuits between the CC1000 chip (3V) and the parallel port of the computer (5V).
- Connector for a PC parallel port cable.
- Connector for antenna, modulation data in/out, synchronisation clock out, RSSI out and IF out.
- Edge connector for future use.

This board is designed with great flexibility so that you can evaluate the circuit performance for several circuit configurations, and in development of your own applications. A layout sketch of the evaluation board is shown in chapter 0.

The evaluation board is distributed in two versions, and the difference is the frequency band of operation. The two versions are optimised for 434 MHz and 869 MHz to cover the two licence free band in Europe. The operating frequency band is marked on the Evaluation Board.

Description

The evaluation circuit board constitutes of three main parts. These are the RF-section, the voltage supply and the PC-interface. The PC-interface contains voltage level shift circuit, which buffers the control lines.

Voltage supply

You can chose between applying a 4-10V non-regulated supply voltage or a 3V regulated supply voltage by setting a switch on the board (SPDT). If a non-regulated supply voltage is applied, an on board regulator generates a regulated 3V supply. A diode prevents damage if wrong polarity is used for the non-regulated input. The connector has five contacts, which is shown below. In addition to the three supply voltage contacts, there are two contacts, which can be used to measure the DC current to the CC1000 chip. A short jumper is placed between these two contacts for the circuit to work. If you want to measure the DC current, replace the jumper with an amperemeter (as shown in the figure below). The current range is from 0 to 26 mA.

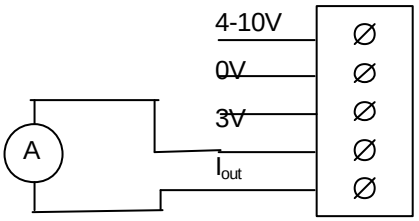

Figure: The power connector with an amperemeter attached.

RF-section

The RF section consists of a CC1000 chip with external components. The different components are explained below.

The loop filter

The CC1000 has integrated the loop-filter and shaping features on-chip. For flexibility it is also possible to use an external loop-filter. The PLL loop filter contains the components C121-C122 and R121. However, in most cases the internal filter will give the optimum performance. The loop filter is connected to the same pin as the monitoring of the lock indicator (see 2.1.4). When external loop-filter is added, the R122 must be removed to avoid conflict with the lock line connected to the parallel port.

The LOCK signal

A LOCK signal is connected to the parallel port interface to be monitored by the software. The signal tells you if the synthesiser frequency is in lock. It is also available at a test pin, TP2, and is active high.

This digital output can also be configured to other functions, as control signal for external PA or external LNA. Please see the data sheet for details.

Note: To monitor this signal CC1000 must be configured to take out this signal on CHP_OUT. This is the default setting of SmartRF® Studio. If external loop filter is added the lock signal can not be used due to the loop filter is connected to the same pin.

DIO and DCLK

The modulation input/output (DIO) and the synchronisation output (DCLK) is connected to separate connectors. The connectors are of SMA female type. The data to be sent can be of either Manchester or NRZ. The Manchester code ensures that the signal has no DC component. The Manchester code is based on transitions; a “0” is encoded as a low-to-high transition, a “1” is encoded as a high-to-low transition. See figure below. Maximum data-rate is 9.6 kbit/s giving a baud rate of 19.2 kbaud that is chosen in the software. For NRZ the baud rate is equal to the bit rate and is maximum 19.2 kbaud.

To test your module use a $3V_{pp}$ logic level with 1-10 kHz square wave for Manchester coded data and 1- 20 kHz square wave for NRZ data.

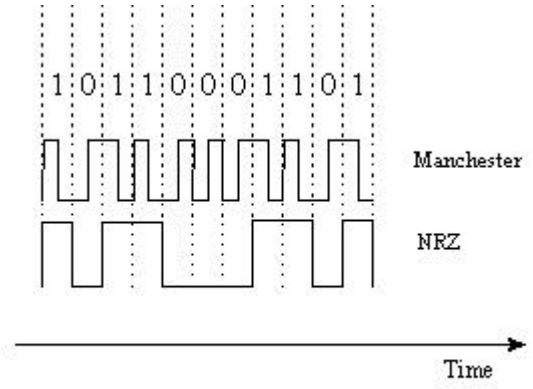

The CC1000 has an internal clock synchronisation circuit that can be monitored on DCLK. The relationship between DIO and DCLK is given below, for the different modes of C1000. Please see datasheet for details.

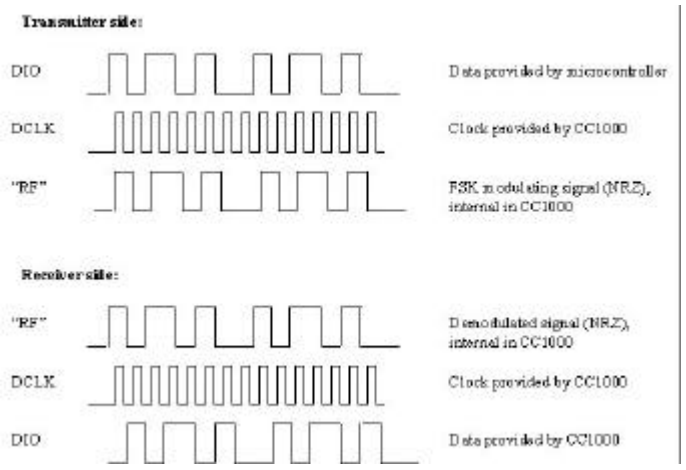

Synchronous NRZ mode

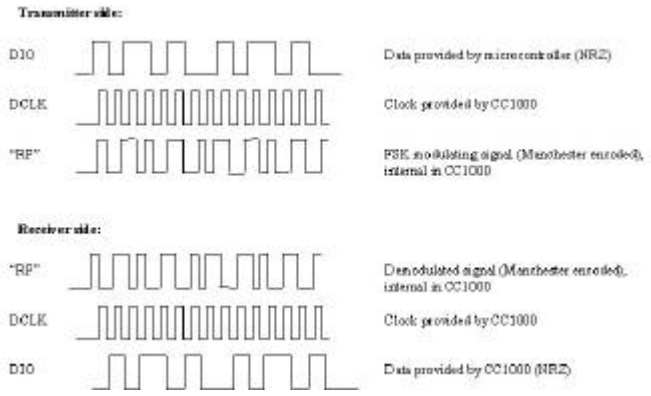

Synchronous Manchester encoded mode

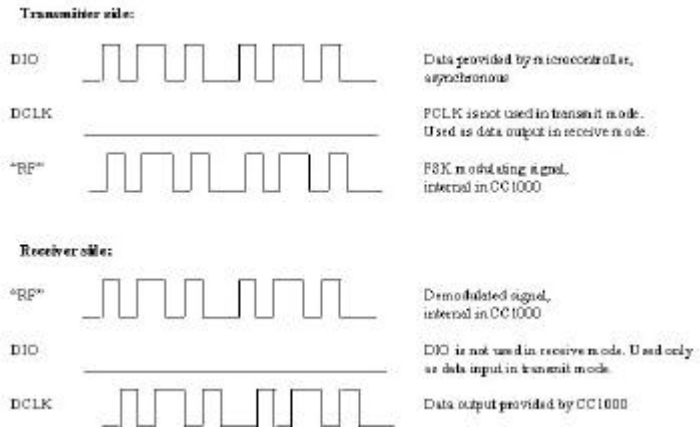

Transparent Asynchronous UART mode

RSSI/IF

The RSSI/IF is connected to a separate connector of SMA female type. This pin is connected from the CC1000 via a serial resistor (R280), and a shunt R (R281) and C(C281). The default of this components is set to give out RSSI information, and the measured voltage will be between 0 - 1.2 V. Based on this voltage the received signal strength can be calculated as given in the CC1000 data sheet.

The RSSI/IF can also be configured to take out the 10.7 MHz IF frequency. This is useful if an external demodulator is needed for narrow band applications. This demodulator can easily be connected to the RSSI/IF connector. The components R180, R181, and C181 must in this case be changed to matching elements. Please see the data sheet for details.

LNA/PA matching

The input/output matching network is optimised for either 434 MHz or 868 MHz operation. The component values are calculated in the software program, and consist of L41, L42, C51, L51 and C52. Using the specified component values for the input/output match will give an optimum match at the specified operating frequency. Minor tuning of the component values may be necessary to compensate for layout parasitics at other frequencies or other layouts.

The crystal oscillator

Crystal frequency is set to 14.7456 MHz, X1. The crystal oscillator circuit has a trimmer capacitor, CT152, which reduces the initial tolerance of the crystal to zero by careful adjustment using a precision frequency counter. The crystal used at this board has ±10 ppm accuracy and ±10 ppm over the –10 to +70 °C temperature range. The crystal oscillator has an AC coupled (C153) test pin for external clock injection, TP1. Be sure to remove the crystal when an external clock is used. The external clock should have amplitude of 1-3V_{pp}. The loading capasitors are designed for a 12 pF crystal load.

The RF filter options

There are three RF filter options: LC-filter, SAW filter, or no filter used. Each of the three filter alternatives is equipped with a female SMA antenna connector. To choose between the three filters there is a zero ohm resistor that can be moved (R61-R63).

Unfiltered antenna output

To select an unfiltered this output the zero ohm resistor must be put in R61, and R62 and R63 shall not be mounted.

LC-filtered antenna output

To choose the LC filtered antenna output the zero ohm resistor must be put in the R62 position. A LC-filter consisting of L52, C52 and C53 make up a 3dB-equal ripple low-pass filter that prevents harmonics to be emitted from the transmitter. In receive mode the filter removes high frequencies in order to prevent distortion and jamming of the receiver. The filter is designed for 50Ω termination impedance. The LC-filter is selected by placing the zero ohm resistor in the R62 position. For operation at other frequencies, use the formulas below.

$$w_C \approx w_{RF} \cdot \left(\frac{1}{1 - 0.1333} \right), \qquad L = \frac{35.6}{w_C}, \qquad C = \frac{0.067}{w_C},$$

where ω_C is the cut-off frequency and ω_{RF} is the transmitted RF frequency .

SAW filtered antenna output

To choose the SAW filtered antenna output the zero ohm resistor must be put in the R63 position. The components around the filter (F2) can be changed to match any SAW filter type. The SAW filter will introduce additional loss, but will increase the selectivity of the receiver.

Layout sketches, assembly drawings and circuit diagram

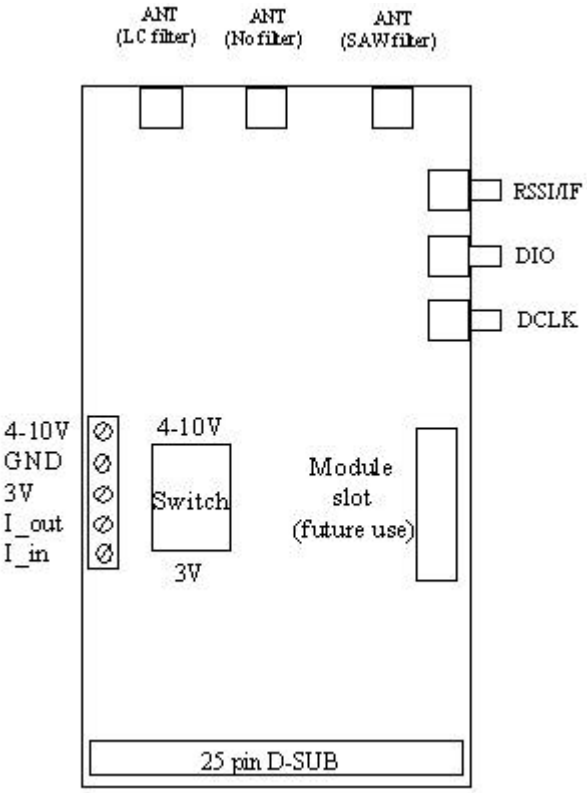

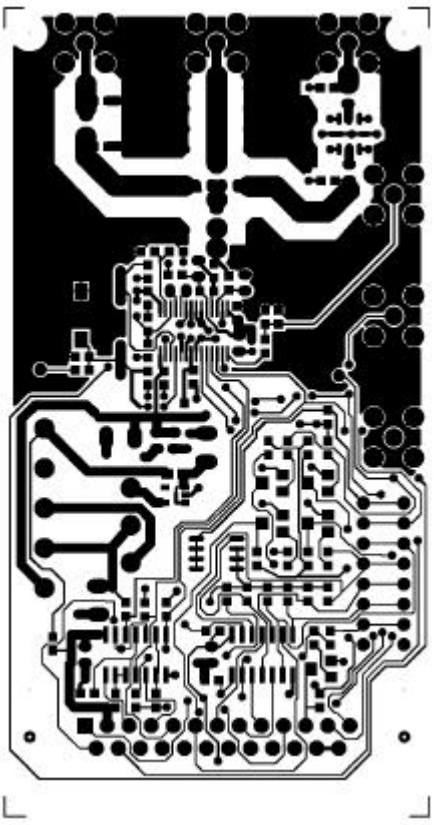

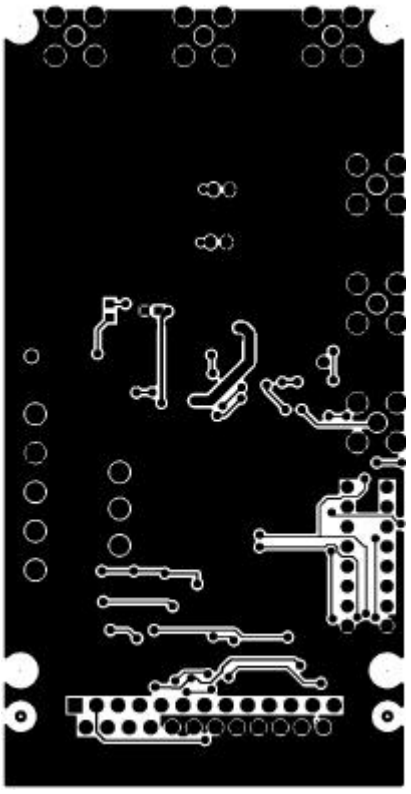

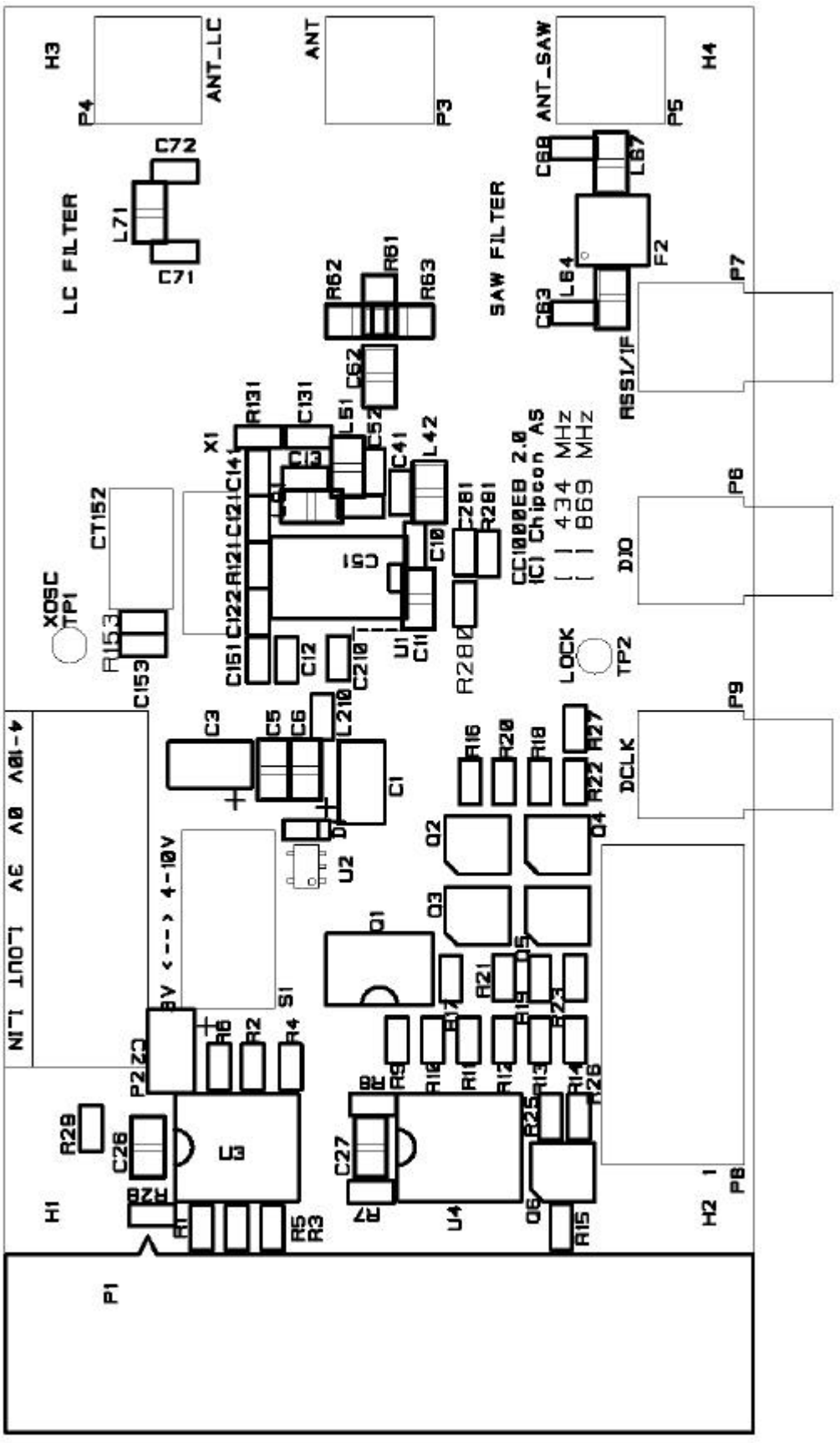
ANT_LC
ANT
ANT_SAW
LC FILTER
SAW FILTER
XOSC
LOCK
DIO
DCLK
CC1000EB 2.0
(C) Chipcon AS
434 MHz
869 MHz
4-10V
3V LOUT LIN

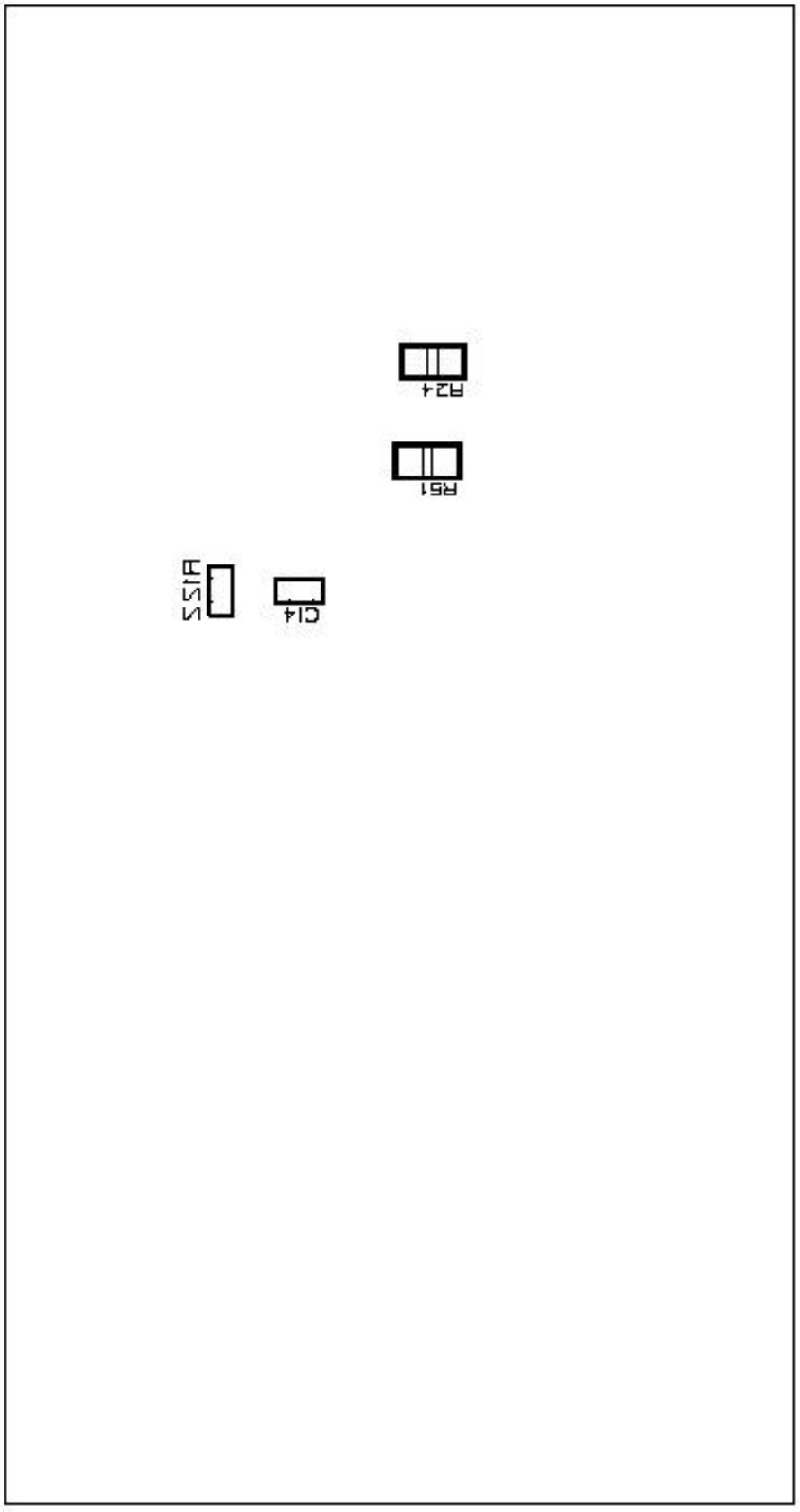
R24
R51
C14

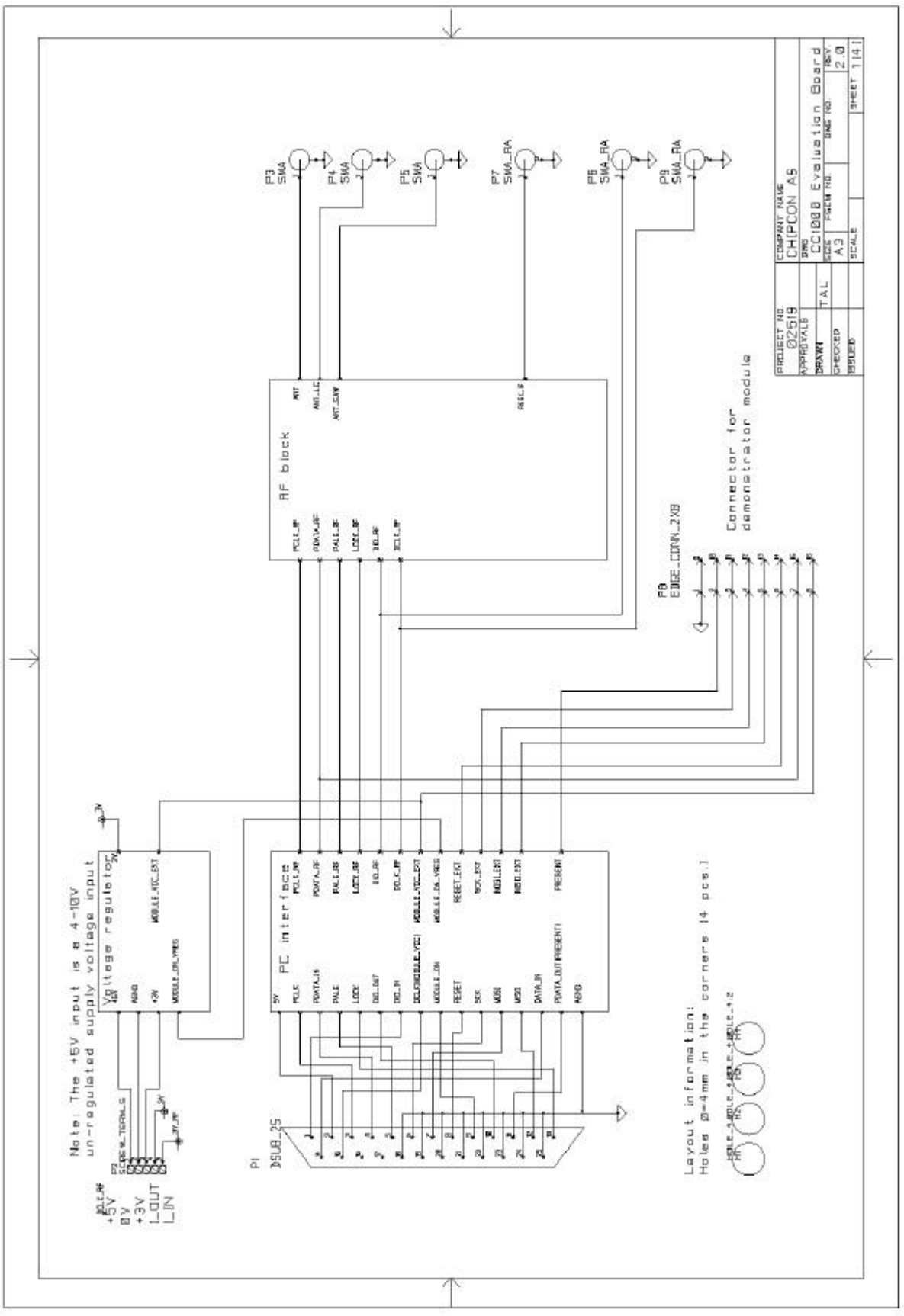

RF block
PC interface
Voltage regulator
Connector for demonstrator module
Note: The +5V input is a 4-10V un-regulated supply voltage input
Layout information: Holes Ø=4mm in the corners (4 pcs.)
CHIPCON AS
CC1000 Evaluation Board

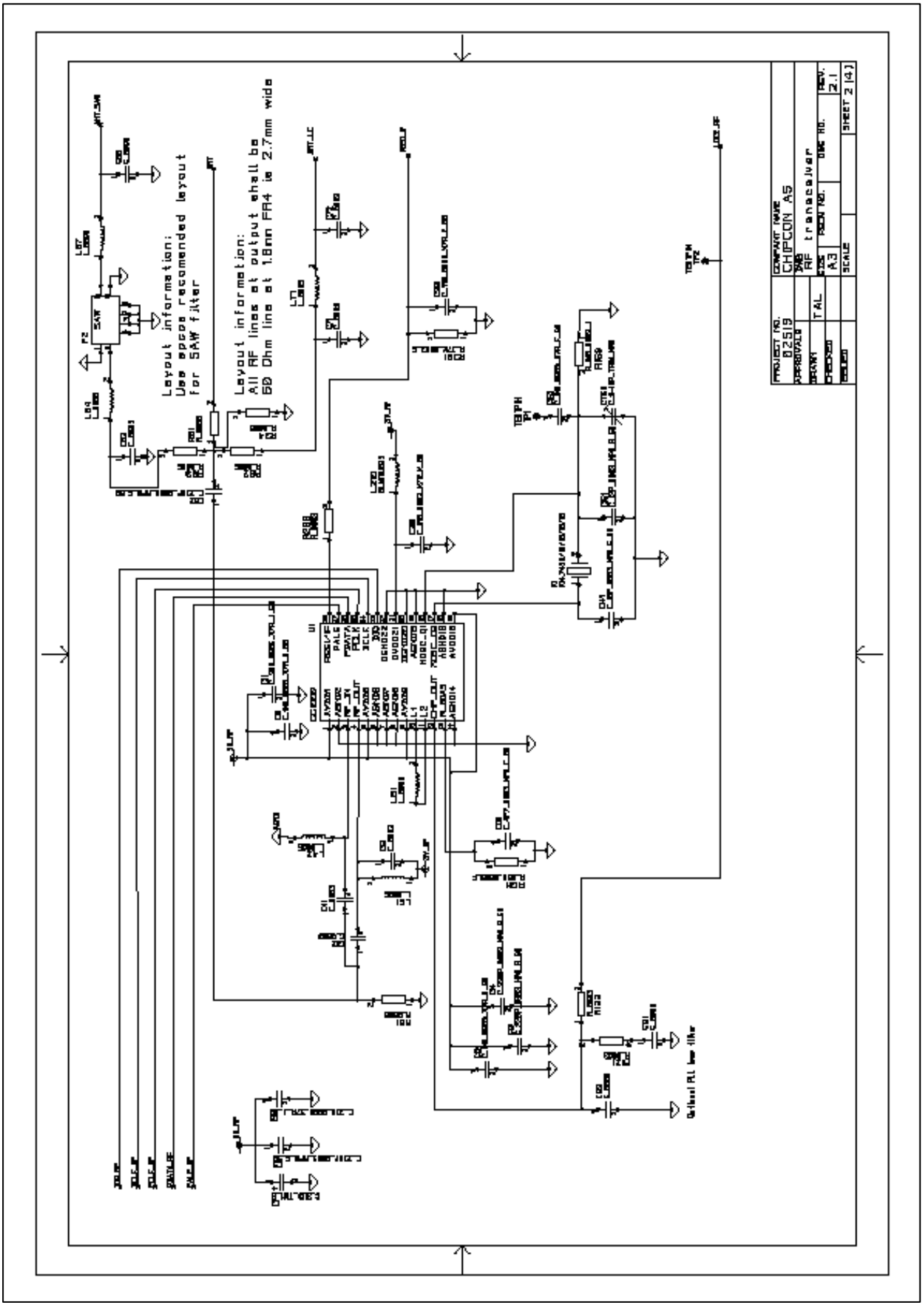
Layout information:
Use space recomended layout
for SAW filter
Layout information:
All RF lines at output shall be
50 Ohm line at 1.8mm FR4 is 2.7mm wide
CHIPCON AS
RF transceiver
TAL
A3
2.1

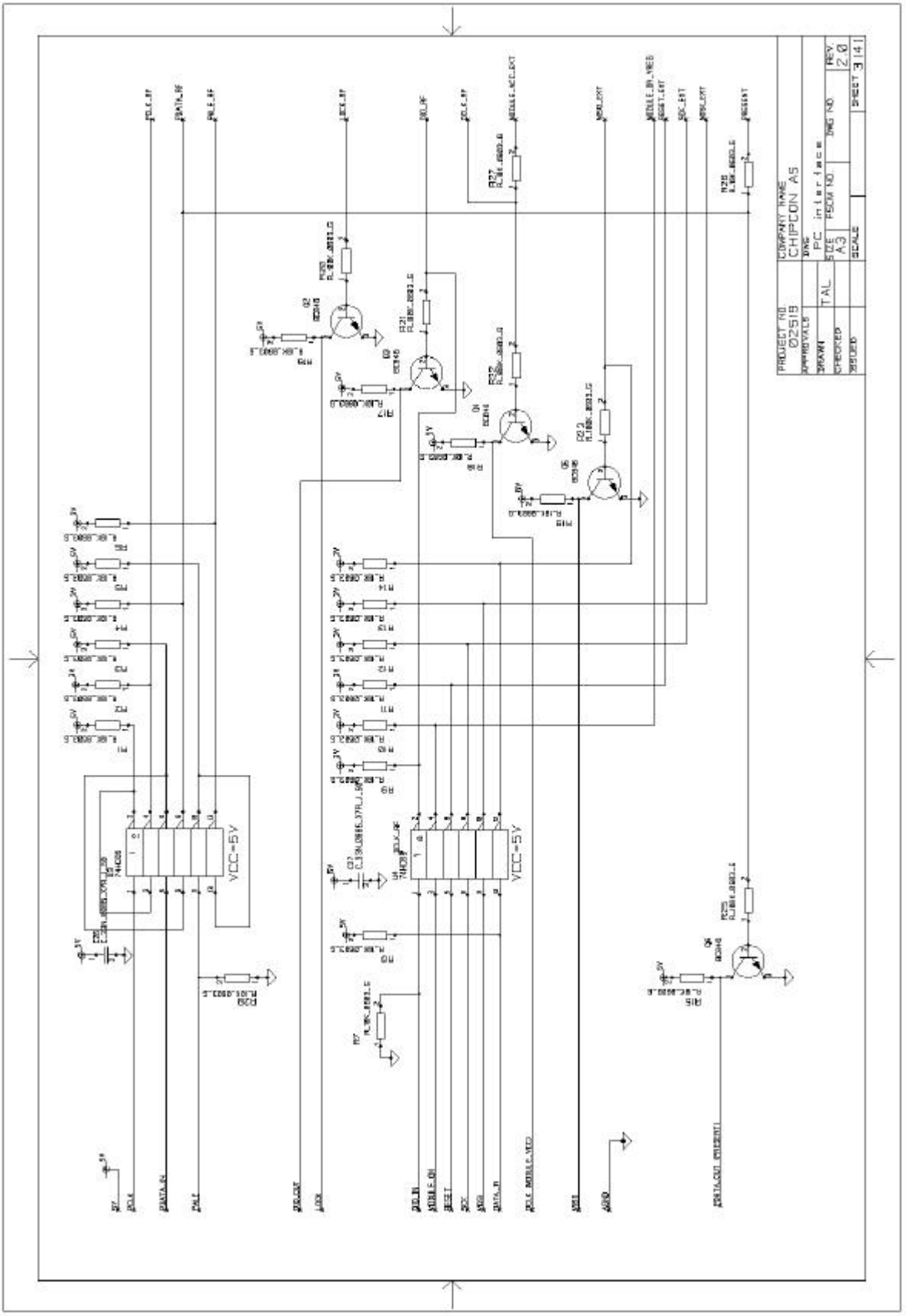
COMPANY NAME
CHIPCON AS
PROJECT NO
02518
APPROVED
DRAWN
TAL
CHECKED
ISSUED
SIZE
A3
SCALE
TITLE
PC interface
DWG NO
REV.
2.0
SHEET 3 of 4
VCC=5V
VCC=5V

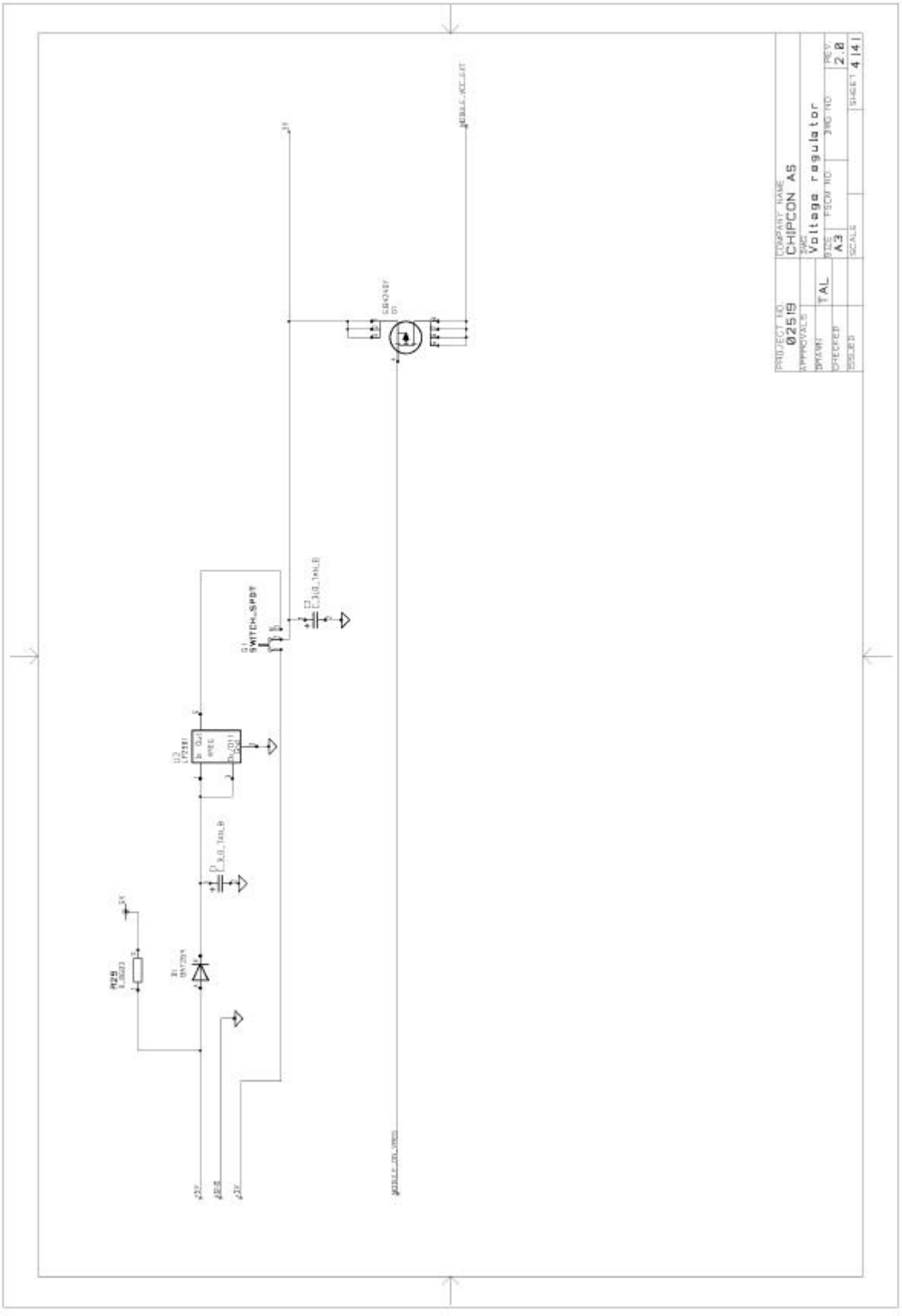
PROJECT NO.
02519
COMPANY NAME
CHIPCON AS
Voltage regulator
TAL
A3
2.0
4141

Bill of materials

RF part 434 MHz			
Reference	*Description*	*Value*	*Part*
C3	Capacitor, tantal	3,3 uF	C_3u3_B
C5	Capacitor 0805	220 pF	C_220P_0805_NP0_G_50
C6	Capacitor 0805	33 nF	C_33N_0805_X7R_J_50
C10	Capacitor 0603	1 nF	C_1N0_0603_X7R_K_50
C11	Capacitor 0805	33 nF	C_33N_0805_X7R_J_5
C12	Capacitor 0603	1 nF	C_1N0_0603_X7R_K_50
C13	Capacitor 0603	220 pF	C_220P_0603_NP0_G_50
C14	Capacitor 0603	220 pF	C_220P_0603_NP0_G_50
C41	Capacitor 0603	15 pF	C_15P_0603_NP0_J_50
C51	Capacitor 0603	8.2 pF	C_8P2_0603_NP0_J_50
C52	Capacitor 0603	5.6 pF	C_5P6_0603_NP0_J_50
C62	Capacitor 0805	220 pF	C_220P_0805_NP0_G_50
C63	Capacitor 0603	5.6 pF	C_5P6_0603_NP0_C_5
C68	Capacitor 0603	5.6 pF	C_5P6_0603_NP0_C_50
C71	Capacitor 0603	15 pF	C_15P_0603_NP0_J_50
C72	Capacitor 0603	22 pF	C_22P_0603_NP0_J_50
C121	Capacitor 0603		Not used
C122	Capacitor 0603		Not used
C131	Capacitor 0603	4.7 pF	C_4P7_0603_NP0_C_50
C141	Capacitor 0603	8.2 pF	C_8P2_0603_NP0_G_50
C151	Capacitor 0603	6.8 pF	C_6P8_0603_NP0_J_50
C153	Capacitor 0603	1 nF	C_1N0_0603_X7R_K_50
C210	Capacitor 0603	1 nF	C_1N0_0603_X7R_K_50
C281	Capacitor 0603	1 nF	C_1N0_0603_X7R_K_50
CT152	Trimmer Capacitor		C_3-10P_TRIM_NP0
F2	SAW-filter, 433.92 MHz		B3550 (Epcos)
L42	Inductor 0805	68 nH	L_68N_0805_J
L51	Inductor 0805	6.2 nH	L_6N2_0805_J
L64	Inductor 0805	33 nH	L_33N_0805_J
L67	Inductor 0805	33 nH	L_33N_0805_J

L71	Inductor 0805	8.2 nH	L_8N2_0805_J
L91	Inductor 0805	33 nH	L_33N_0805_J (Koa KL732ATE33NJ)
L210	EMI filter bead		BLM11A102S (Murata)
R24			Not used
R51			Not used
R61	Resistor 0805		0R_0805
R62			Not used
R63			Not used
R121			Not used
R122	Resistor 0603		0R, 0603
R131	Resistor 0603		R_82K_0603_F
R153			Not used
R280	Resistor 0603		0R_0603
R281	Resistor 0603		R_27K_0603_G
TP1	Testpoint		TESTPIN
TP2	Testpoint		TESTPIN
U1	Single chip transceiver		CC1000
X1	Crystal, HC-49-SMD		X_14.7456/10/10/10/12

RF part 869 MHz			
Reference	*Description*	*Value*	*Part*
C3	Capasitor, tantal	3,3 uF	C_3u3_B
C5	Capasitor 0805	220 pF	C_220P_0805_NP0_G_50
C6	Capacitor 0805	33 nF	C_33N_0805_X7R_J_50
C10	Capacitor 0603	1 nF	C_1N0_0603_X7R_K_50
C11	Capacitor 0805	33 nF	C_33N_0805_X7R_J_5
C12	Capacitor 0603	1 nF	C_1N0_0603_X7R_K_50
C13	Capacitor 0603	220 pF	C_220P_0603_NP0_G_50
C14	Capacitor 0603	220 pF	C_220P_0603_NP0_G_50
C41	Capacitor 0603	10 pF	C_10P_0603_NP0_J_50
C51	Capacitor 0603		Not used
C52	Capacitor 0603	4.7 pF	C_4P7_0603_NP0_J_50

C62	Capacitor 0805	220 pF	C_220P_0805_NP0_G_50
C63	Capacitor 0603	3.3 pF	C_3P3_0603_NP0_C_50
C68	Capacitor 0603	3.3 pF	C_3P3_0603_NP0_C_50
C71	Capacitor 0603	8.2 pF	C_8P2_0603_NP0_G_50
C72	Capacitor 0603	8.2 pF	C_8P2_0603_NP0_G_50
C121	Capacitor 0603		Not used
C122	Capacitor 0603		Not used
C131	Capacitor 0603	4.7 pF	C_4P7_0603_NP0_C_50
C141	Capacitor 0603	8.2 pF	C_8P2_0603_NP0_G_50
C151	Capacitor 0603	6.8 pF	C_6P8_0603_NP0_J_50
C153	Capacitor 0603	1 nF	C_1N0_0603_X7R_K_50
C210	Capacitor 0603	1 nF	C_1N0_0603_X7R_K_50
C281	Capacitor 0603	1 nF	C_1N0_0603_X7R_K_50
CT152	Trimmer Capacitor		C_3-10P_TRIM_NP0
F2	SAW-filter, 868.6 MHz		B3571 (Epcos)
L42	Inductor 0805	120 nH	L_120N_0805_J
L51	Inductor 0805	2.5 nH	L_2N5_0805_J
L64	Inductor 0805	15 nH	L_15N_0805_J
L67	Inductor 0805	15 nH	L_15N_0805_J
L71	Inductor 0805	3.3 nH	L_3N3_0805_J
L91	Inductor 0805	4.7 nH	L_4N7_0805_J (Koa KL732ATE4N7C)
L210	EMI filter bead		BLM11A102S (Murata)
R24			Not used
R51			Not used
R61	Resistor 0805		0R_0805
R62			Not used
R63			Not used
R121			Not used
R122	Resistor 0603		0R, 0603
R131	Resistor 0603		R_82K_0603_F
R153			Not used
R280	Resistor 0603		0R_0603
R281	Resistor 0603		R_27K_0603_G

TP1	Testpoint		TESTPIN
TP2	Testpoint		TESTPIN
U1	Single chip transceiver		CC1000
X1	Crystal, HC-49-SMD		X_14.7456 /10/10/10/12

Voltage regulator			
Reference	*Description*	*Value*	*Part*
C1	Capacitor, tantal	3.3µF	C_3U3_TAN_B
C2	Capacitor, tantal	3.3µF	C_3U3_TAN_B
R29	Resistor 0603		Not used
D1	Diode, Si		BAT254
Q1	MOSFET, P ch.		SI9424DY, Siliconix
S1	SPDT switch		SWITCH_SPDT
U2	Voltage regulator		LP2981, 3V, National Semiconductor

PC interface			
Reference	*Description*	*Value*	*Part*
C26	Capacitor 0805	33nF	C_33N_0805_X7R_J_50
C27	Capacitor 0805	33nF	C_33N_0805_X7R_J_50
Q2	BJT, Si, NPN, small signal		BC846
Q3	BJT, Si, NPN, small signal		BC846
Q4	BJT, Si, NPN, small signal		BC846
Q5	BJT, Si, NPN, small signal		BC846
Q6	BJT, Si, NPN, small signal		BC846
R1	Resistor 0603	10kΩ	R_10K_0603_G
R2	Resistor 0603	10kΩ	R_10K_0603_G
R3	Resistor 0603	10kΩ	R_10K_0603_G
R4	Resistor 0603	10kΩ	R_10K_0603_G
R5	Resistor 0603	10kΩ	R_10K_0603_G
R6	Resistor 0603	10kΩ	R_10K_0603_G
R7	Resistor 0603	10kΩ	R_10K_0603_G
R8	Resistor 0603	10kΩ	R_10K_0603_G

R9	Resistor 0603	10kΩ	R_10K_0603_G
R10	Resistor 0603	10kΩ	R_10K_0603_G
R11	Resistor 0603	10kΩ	R_10K_0603_G
R12	Resistor 0603	10kΩ	R_10K_0603_G
R13	Resistor 0603	10kΩ	R_10K_0603_G
R14	Resistor 0603	10kΩ	R_10K_0603_G
R15	Resistor 0603	10kΩ	R_10K_0603_G
R16	Resistor 0603	10kΩ	R_10K_0603_G
R17	Resistor 0603	10kΩ	R_10K_0603_G
R18	Resistor 0603	10kΩ	R_10K_0603_G
R19	Resistor 0603	10kΩ	R_10K_0603_G
R20	Resistor 0603	100kΩ	R_100K_0603_G
R21	Resistor 0603	100kΩ	R_100K_0603_G
R22	Resistor 0603	100kΩ	R_100K_0603_G
R23	Resistor 0603	100kΩ	R_100K_0603_G
R25	Resistor 0603	100kΩ	R_100K_0603_G
R26	Resistor 0603	10kΩ	R_10K_0603_G
R27	Resistor 0603	10kΩ	R_10K_0603_G
R28	Resistor 0603	10kΩ	R_10K_0603_G
U3	Hex inverter, oc		74HC05
U4	Hex inverter, oc		74HC05

Evaluation board			
Reference	*Description*	*Value*	*Part*
H1	Circuit Board Support		Distance 12.5mm
H2	Circuit Board Support		Distance 12.5mm
H3	Circuit Board Support		Distance 12.5mm
H4	Circuit Board Support		Distance 12.5mm
P1	D-Sub, 25 pin		DSUB_25
P2	5 pin terminal, screw		SCREW_TERM_5
P3	SMA connector		SMA (Straight)
P4	SMA connector		SMA (Straight)

P5	SMA connector		SMA	(Straight)
P6	SMA connector		SMA_RA	(Right angle)
P7	SMA connector		SMA_RA	(Right angle)
P9	SMA connector		SMA_RA	(Right angle)
P8	Edge connector, 2 x 8 pin		EDGE_CONN_2X8	

Note: Items shaded are different for different frequencies

Using the Development Kit

The purpose of the Development Kit is to give users of the integrated transceiver CC1000 hands-on experience with the chip. A typical set-up of the evaluation board is shown below. Each of the evaluation boards is connected to a PC to be programmed by the software.

- How to set up a transmitter.

The data signal that you want to send in transmit mode can be of either Manchester or NRZ code. A square wave from a function generator can be used to generate this data. The signal source shall be connected to the Data I/O port (DIO) at the evaluation board. The signal must be a square wave from 0 to 3V as shown. Do not apply a 5V signal because it can damage the CC1000 chip. The signal from the function generator will represent either zeroes or ones, and the bit rate in Manchester coded will be 1/T, where T is the period time. For the NRZ case, the bit rate is given by 2/T due to the fact that the bit rate is equal to the baud rate in NRZ.

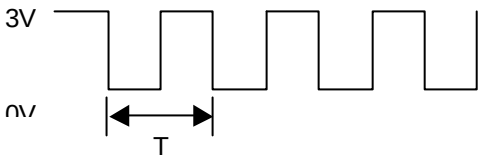

The transmitted signal can be studied on a spectrum analyser, sent out on the antenna (see note below) or sent to the receiver via a cable with an attenuator attached.

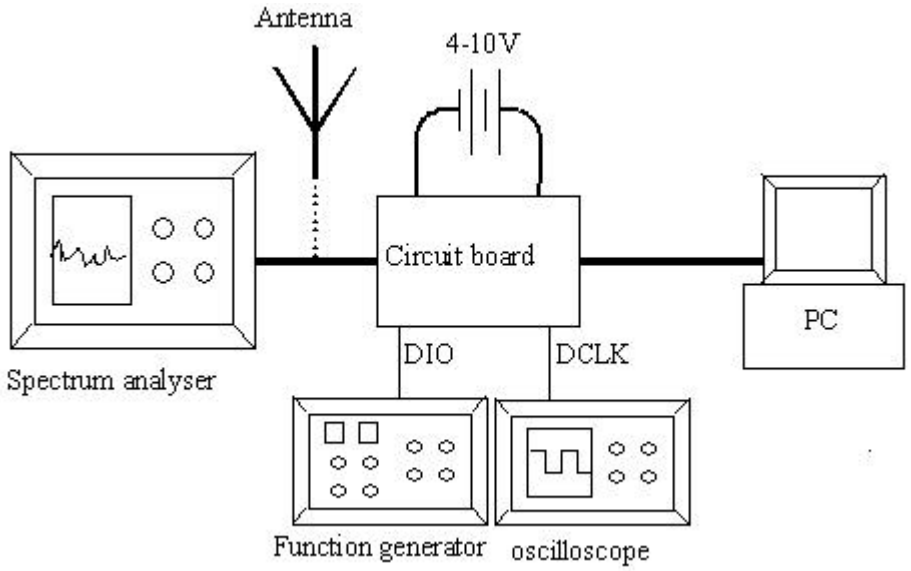

Figure: Equipment set-up in transmit mode.

- How to set up a receiver

In receive mode a RF generator can be connected to the antenna input to give an ideal RF signal to the circuit board for testing the receiver. Use FSK modulation with appropriate deviation and modulation rate. If you don't have the equipment to send FSK modulation, you can use a RF generator with FM modulation and use an external function generator to modulate the signal with a square wave. The RF signal can also come from the transmitter via the antenna. An oscilloscope is used to see the signal that is being received.

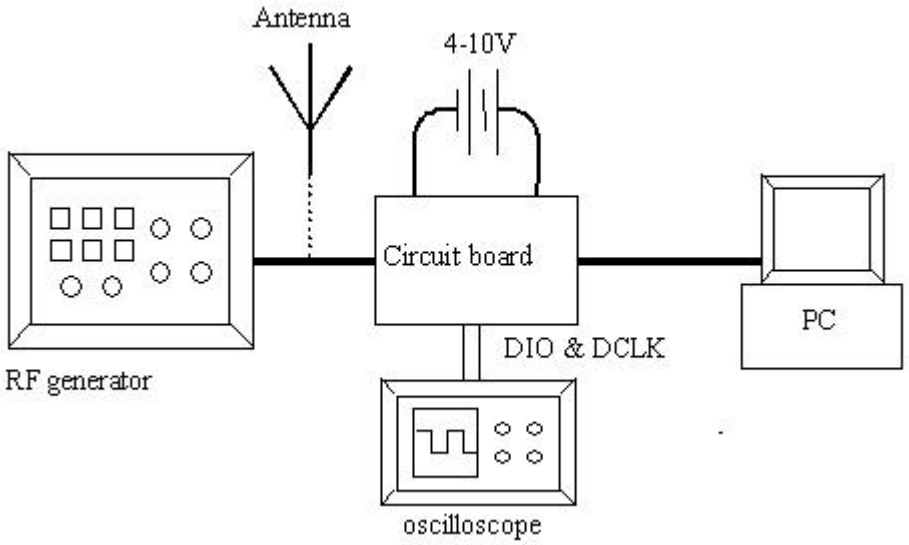

Figure: Equipment set-up in receive mode.

Important: The use of radio transceivers is regulated by international and national rules. Before transmitting a RF signal out on the antenna, please contact your local telecommunication authorities to check if you are licensed to operate the transceiver.

General Information

Chipcon AS believes the furnished information is correct and accurate at the time of this printing. However, Chipcon AS reserves the right to make changes to this product without notice. Chipcon AS does not assume any responsibility for the use of the described product. Please refer to Chipcon's web site for the latest update.

SmartRF® is a registered trademark of Chipcon AS. SmartRF® is Chipcon's RF technology platform with RF library cells, modules and design expertise. Based on SmartRF® Chipcon develops standard component RF-circuits as well as full custom ASICs based on customers' requirements.