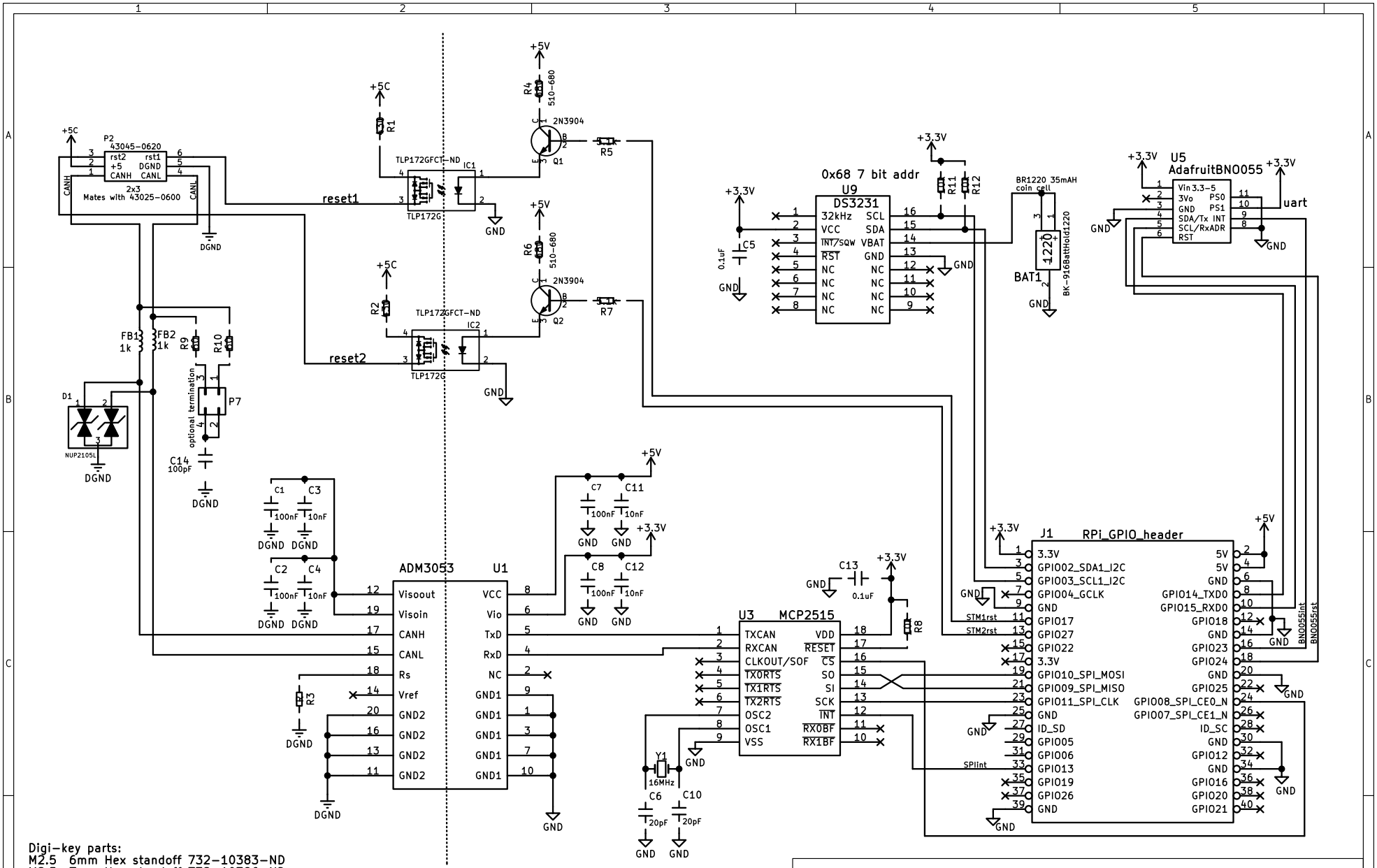

Digi-key parts:
M2.5 6mm Hex standoff 732-10383-ND
M2.5 7mm Hex standoff 732-10386-ND
M2.5 10mm Hex standoff 732-10397-ND

H1 MountingHole

H2 MountingHole

H3 MountingHole

H4 MountingHole

Ordered 3/15/2017

Sheet: /
File: RPi3HatV1.2.sch

Title: RPi hat: CAN, RTC, Reset, IMU, (Texsun 2017) V1.7

Size: USLetter	Date: March 15, 2017	Rev: 1
KiCad E.D.A. kicad 4.0.7-e2-637658ubuntu16.04.1		Id: 1/1