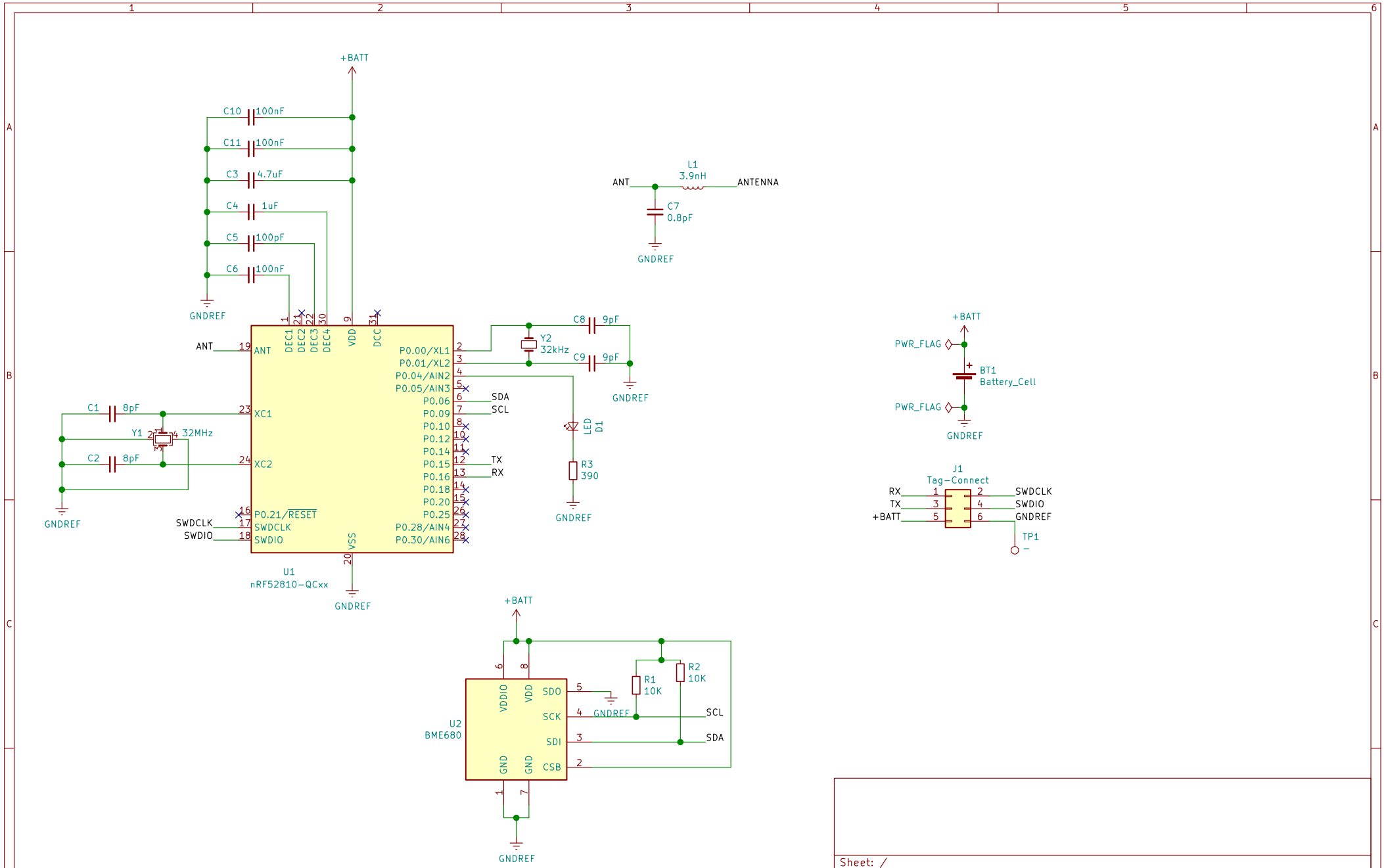

Sheet: /
File: weather.sch

Title:

Size: A4	Date: 2019-04-01	**Rev: 1.2**
KiCad E.D.A. kicad 5.1.0-unknown-567bdd982ubuntu18.10.1		Id: 1/1