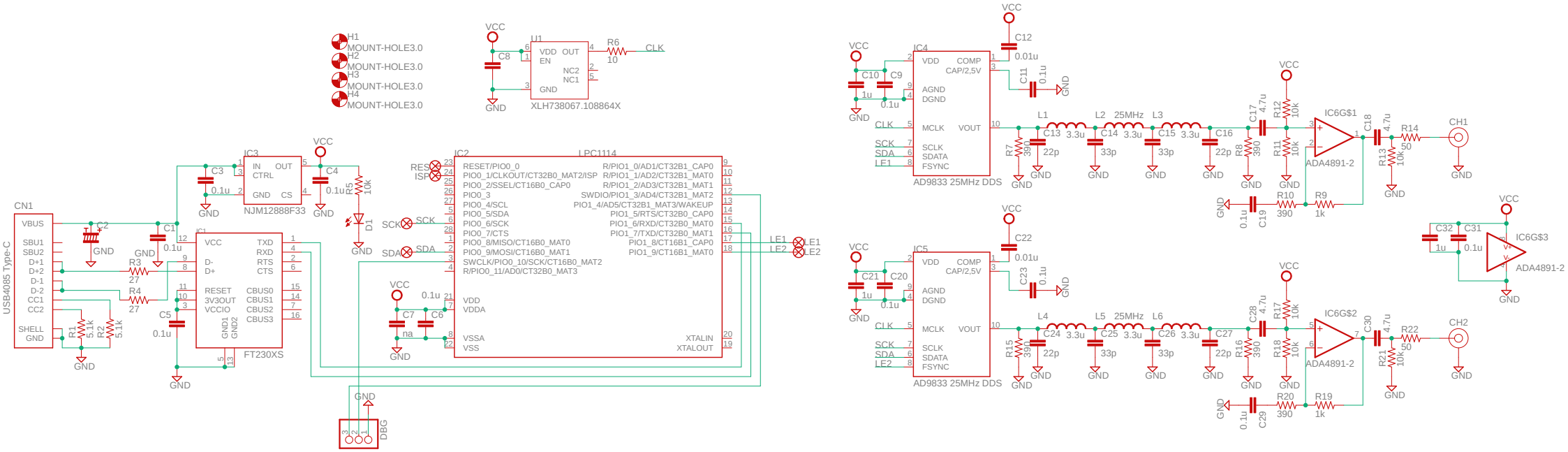
H1 MOUNT-HOLE3.0
H2 MOUNT-HOLE3.0
H3 MOUNT-HOLE3.0
H4 MOUNT-HOLE3.0
U1 XLH738067.108864X
R6 10
CLK
C8
VCC
GND
CN1 USB4085 Type-C
VBUS
SBU1
SBU2
D+1
D+2
D-1
D-2
CC1
CC2
SHELL
GND
C1 0.1u
C2
R1 5.1k
R2 5.1k
R3 27
R4 27
C5 0.1u
IC1 FT230XS
VCC
D-
D+
RESET
3V3OUT
VCCIO
GND1
GND2
TXD
RXD
RTS
CTS
CBUS0
CBUS1
CBUS2
CBUS3
IC3 NJM12888F33
IN
CTRL
OUT
GND
CS
C3 0.1u
C4 0.1u
R5 10k
D1
IC2 LPC1114
RESET/PIO0_0
PIO0_1/CLKOUT/CT32B0_MAT2/ISP
PIO0_2/SSEL/CT16B0_CAP0
PIO0_3
PIO0_4/SCL
PIO0_5/SDA
PIO0_6/SCK
PIO0_7/CTS
PIO0_8/MISO/CT16B0_MAT0
PIO0_9/MOSI/CT16B0_MAT1
SWCLK/PIO0_10/SCK/CT16B0_MAT2
R/PIO0_11/AD0/CT32B0_MAT3
R/PIO1_0/AD1/CT32B1_CAP0
R/PIO1_1/AD2/CT32B1_MAT0
R/PIO1_2/AD3/CT32B1_MAT1
SWDIO/PIO1_3/AD4/CT32B1_MAT2
PIO1_4/AD5/CT32B1_MAT3/WAKEUP
PIO1_5/RTS/CT32B0_CAP0
PIO1_6/RXD/CT32B0_MAT0
PIO1_7/TXD/CT32B0_MAT1
PIO1_8/CT16B1_CAP0
PIO1_9/CT16B1_MAT0
VDD
VDDA
VSSA
VSS
XTALIN
XTALOUT
RES
ISP
SCK
SDA
LE1
LE2
C7 na
C6
DBG
IC4 AD9833 25MHz DDS
VDD
COMP
CAP/2,5V
AGND
DGND
CLK
MCLK
VOUT
SCK
SDA
LE1
SCLK
SDATA
FSYNC
C9 1u
C10 0.1u
C11 0.1u
C12 0.01u
L1
L2 25MHz
L3
C13 3.3u
C14 3.3u
C15 3.3u
C16 22p
C17 4.7u
R7 390
R8 390
R11 10k
R12 10k
IC6G$1 ADA4891-2
C18 4.7u
R13 10k
R14 50
CH1
R9 1k
R10 390
C19 0.1u
IC5 AD9833 25MHz DDS
C20 1u
C21 0.1u
C22 0.01u
C23 0.1u
L4
L5 25MHz
L6
C24 3.3u
C25 3.3u
C26 3.3u
C27 22p
C28 4.7u
R15 390
R16 390
R17 10k
R18 10k
IC6G$2 ADA4891-2
C30 4.7u
R21 10k
R22 50
CH2
R19 1k
R20 390
C29 0.1u
C31 0.1u
C32 1u
IC6G$3 ADA4891-2