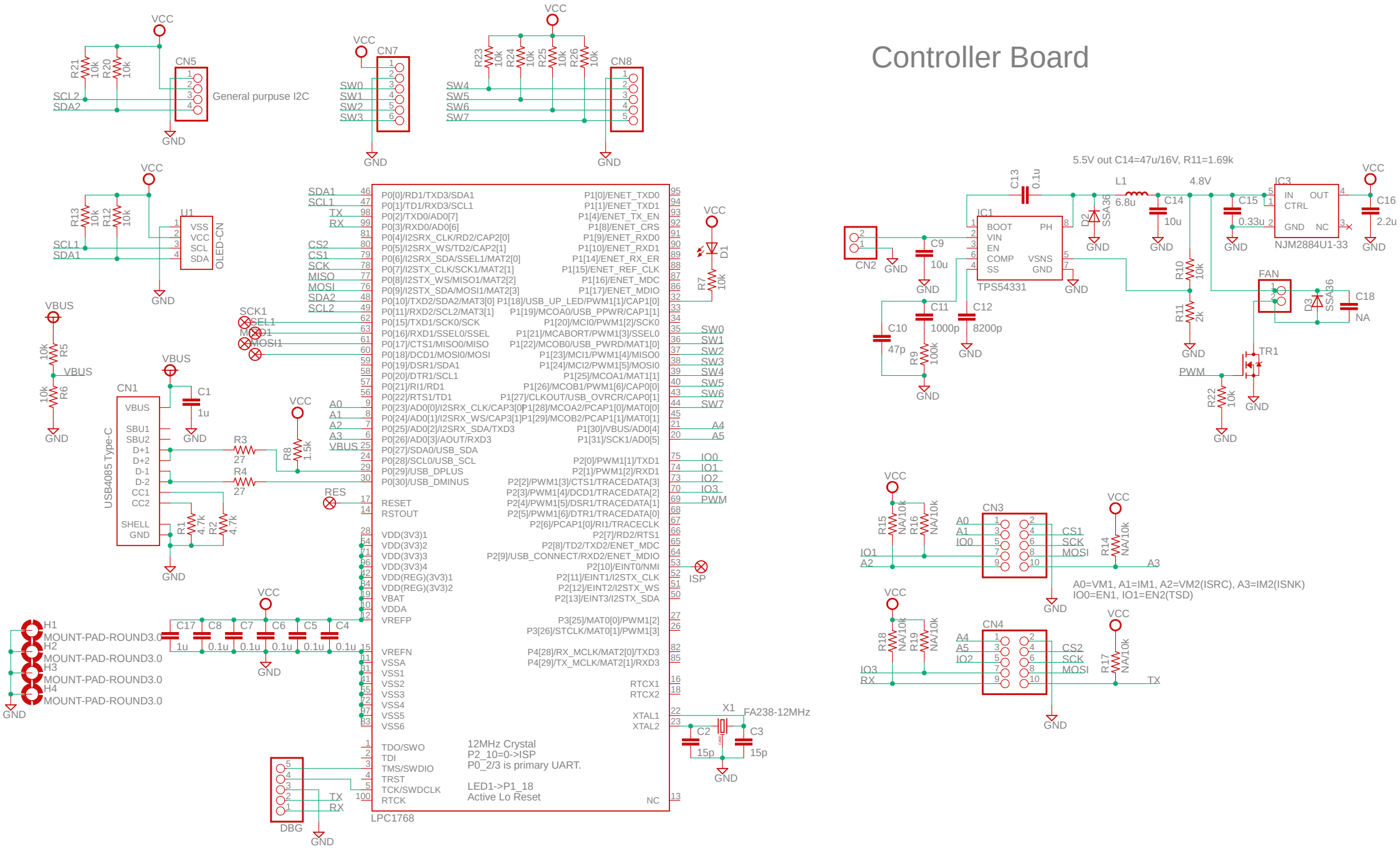Controller Board