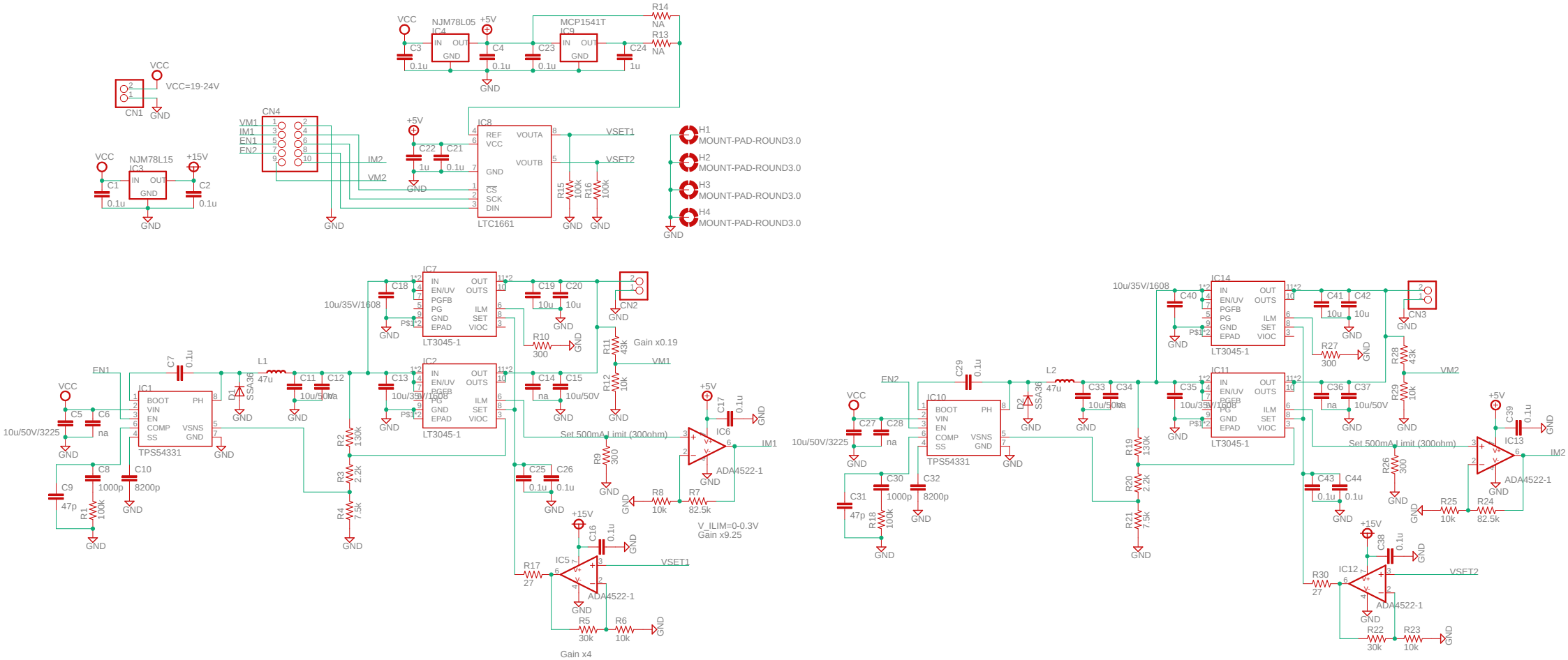
VCC
VCC=19-24V
CN1
GND
NJM78L05
IC4
IN OUT
GND
+5V
C3
0.1u
C4
0.1u
MCP1541T
IC9
C23
0.1u
C24
1u
R14
NA
R13
NA
CN4
VM1
IM1
EN1
EN2
IM2
VM2
NJM78L15
IC3
+15V
C1
0.1u
C2
0.1u
C22
1u
C21
0.1u
IC8
REF
VCC
VOUTA
VOUTB
GND
CS
SCK
DIN
LTC1661
VSET1
VSET2
R15
100k
R16
100k
H1
MOUNT-PAD-ROUND3.0
H2
MOUNT-PAD-ROUND3.0
H3
MOUNT-PAD-ROUND3.0
H4
MOUNT-PAD-ROUND3.0
IC7
IN
EN/UV
PGFB
PG
GND
EPAD
OUT
OUTS
ILM
SET
VIOC
LT3045-1
C18
10u/35V/1608
C19
10u
C20
10u
CN2
R10
300
R11
43k
Gain x0.19
VM1
IC2
C13
10u/35V/1608
C14
na
C15
10u/50V
R12
10k
EN1
VCC
C5
10u/50V/3225
C6
na
C7
0.1u
IC1
BOOT
VIN
EN
COMP
SS
PH
VSNS
GND
TPS54331
D1
SSA36
L1
47u
C11
10u/50V
C12
na
C8
1000p
C10
8200p
C9
47p
R1
100k
R2
130k
R3
2.2k
R4
7.5k
Set 500mA limit (300ohm)
R9
300
C25
0.1u
C26
0.1u
R8
10k
R7
82.5k
IC6
ADA4522-1
C17
0.1u
IM1
V_ILIM=0-0.3V
Gain x9.25
+15V
C16
0.1u
IC5
ADA4522-1
R17
27
VSET1
R5
30k
R6
10k
Gain x4
IC14
C40
10u/35V/1608
C41
10u
C42
10u
CN3
R27
300
R28
43k
VM2
IC11
C35
10u/35V/1608
C36
na
C37
10u/50V
R29
10k
EN2
VCC
C27
10u/50V/3225
C28
na
C29
0.1u
IC10
TPS54331
D2
SSA36
L2
47u
C33
10u/50V
C34
na
C30
1000p
C32
8200p
C31
47p
R18
100k
R19
130k
R20
2.2k
R21
7.5k
Set 500mA limit (300ohm)
R26
300
C43
0.1u
C44
0.1u
C39
0.1u
IC13
ADA4522-1
IM2
R25
10k
R24
82.5k
C38
0.1u
IC12
ADA4522-1
VSET2
R30
27
R22
30k
R23
10k