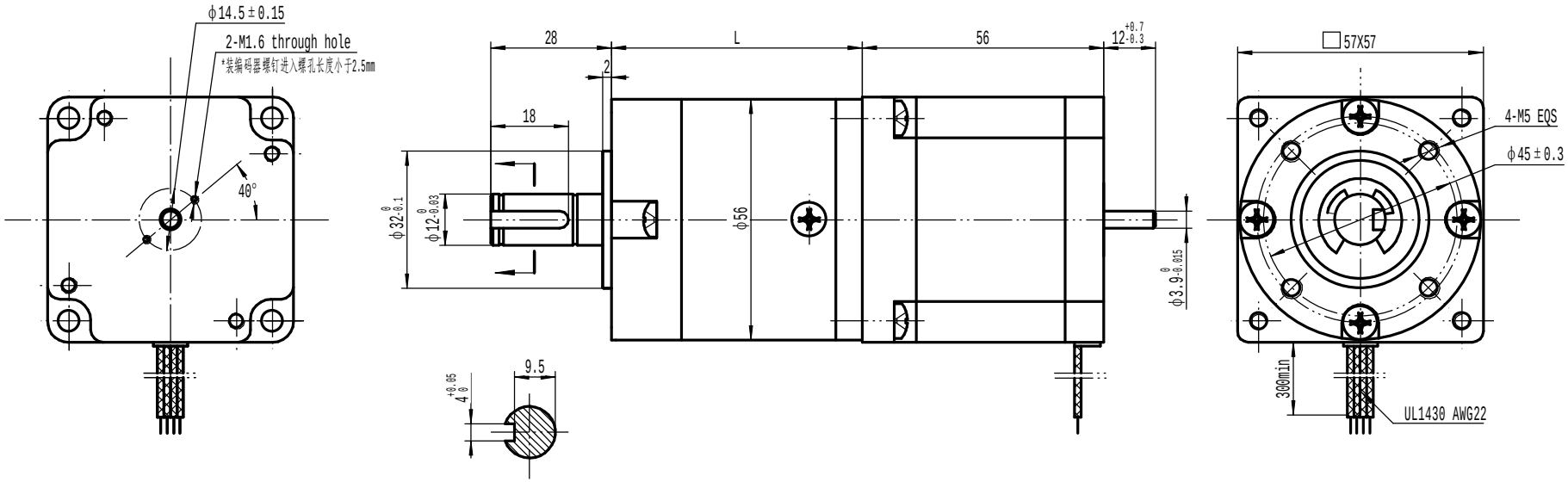

Wiring Diagram:

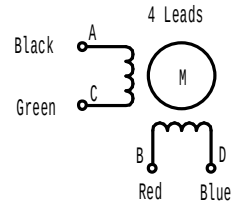

Rotation:

CW Direction	Step	A	C	B	D
⇩	1	+		+	
	2		+	+	
	3		+		+
	4	+			+
	1	+		+	

CW Direction, see from the shaft end.(Only Motor)

Gear Box Specifications:

Gear Ratio	1:77
Number of gear trains	3
Max.rated torque(kg.cm)	240
Max.permissible load in a short time(kg.cm)	720
Length L (mm)	72

Stepper Motor Specifications:

MODEL	Phase	Step Angle	Rated Voltage	Current /Phase	Resistance /Phase	Inductance /Phase	Holding Torque	Rotor Inertia
		Deg/Step	V	A	Ω	mH	kg.cm	$g.cm^2$
57STH56-2804B	2	1.8	2.5	2.8	0.9	2.5	12.6	300

REV	Original content	Changed content	Reason of change	Name	Date
B	61	48	Production need	Zhu Guanghua	2013.11.13

REV.	QTY.	No.	SIG.	DATE
DESIGN	Zhu Guanghua	2013.11.13	STD.	
CHECK				
PROC.			APPR.	

CLS.MAK	QTY	SCALE
S		1:1
PAGE	OF	

DONGZHENG MOTOR

56JXS300K/57STH56-2804B

PLANET GEAR STEPPER MOTOR

0DZ.244.001

REV B