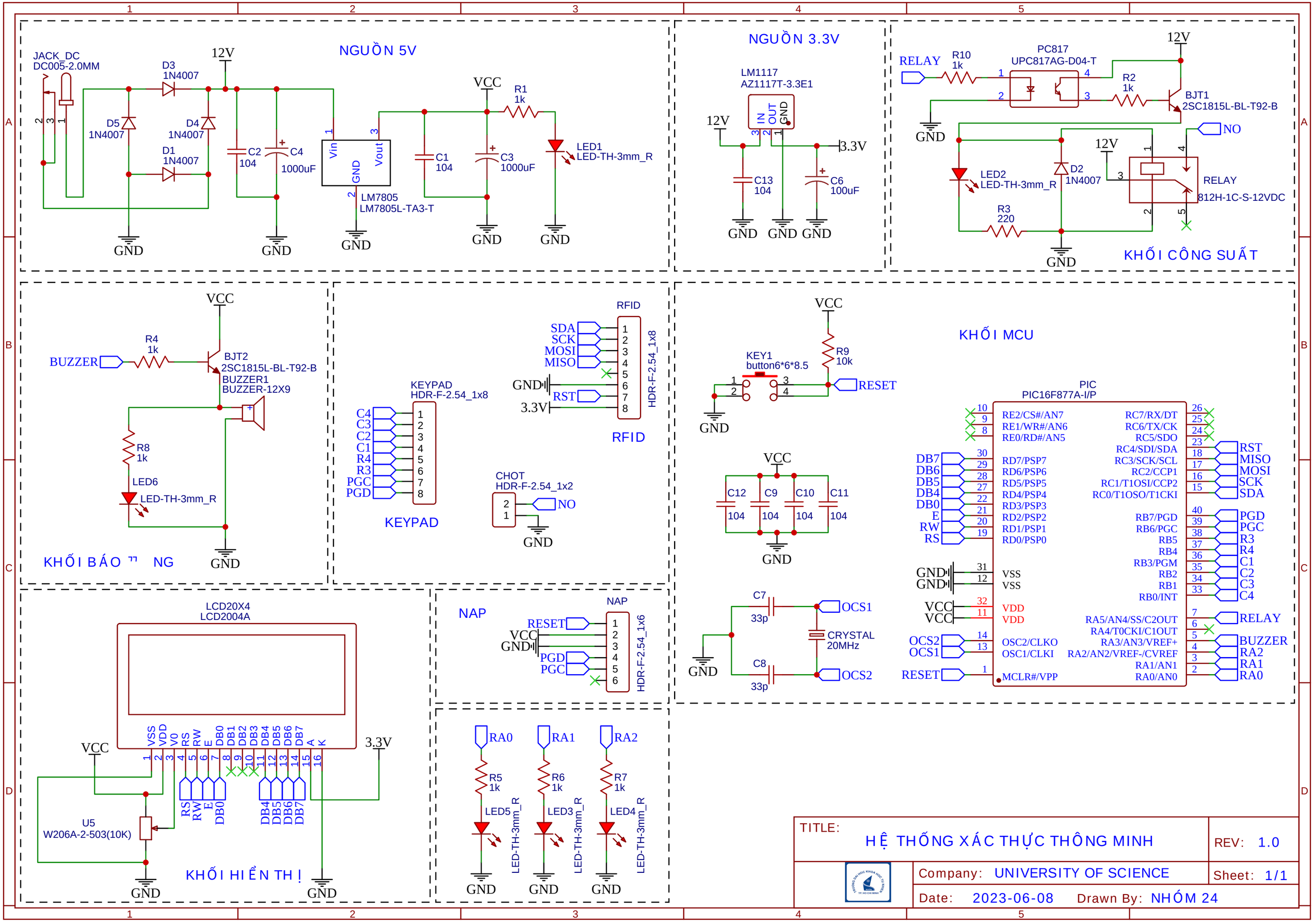
NGUỒN 5V
JACK_DC
DC005-2.0MM
D3
1N4007
D5
1N4007
D4
1N4007
D1
1N4007
12V
C2
104
C4
1000uF
Vin
GND
Vout
LM7805
LM7805L-TA3-T
C1
104
VCC
R1
1k
C3
1000uF
LED1
LED-TH-3mm_R
GND
NGUỒN 3.3V
LM1117
AZ1117T-3.3E1
IN
OUT
GND
3.3V
C13
104
C6
100uF
RELAY
R10
1k
PC817
UPC817AG-D04-T
R2
1k
BJT1
2SC1815L-BL-T92-B
NO
LED2
LED-TH-3mm_R
D2
1N4007
R3
220
RELAY
812H-1C-S-12VDC
KHỐI CÔNG SUẤT
BUZZER
R4
1k
BJT2
2SC1815L-BL-T92-B
BUZZER1
BUZZER-12X9
R8
1k
LED6
LED-TH-3mm_R
KHỐI BÁO ĐỘNG
KEYPAD
HDR-F-2.54_1x8
C4
C3
C2
C1
R4
R3
PGC
PGD
RFID
SDA
SCK
MOSI
MISO
RST
HDR-F-2.54_1x8
CHOT
HDR-F-2.54_1x2
NO
KHỐI MCU
KEY1
button6*6*8.5
R9
10k
RESET
C12
C9
C10
C11
104
C7
33p
C8
33p
OCS1
OCS2
CRYSTAL
20MHz
PIC
PIC16F877A-I/P
RE2/CS#/AN7
RE1/WR#/AN6
RE0/RD#/AN5
RD7/PSP7
RD6/PSP6
RD5/PSP5
RD4/PSP4
RD3/PSP3
RD2/PSP2
RD1/PSP1
RD0/PSP0
VSS
VDD
OSC2/CLKO
OSC1/CLKI
MCLR#/VPP
RC7/RX/DT
RC6/TX/CK
RC5/SDO
RC4/SDI/SDA
RC3/SCK/SCL
RC2/CCP1
RC1/T1OSI/CCP2
RC0/T1OSO/T1CKI
RB7/PGD
RB6/PGC
RB5
RB4
RB3/PGM
RB2
RB1
RB0/INT
RA5/AN4/SS/C2OUT
RA4/T0CKI/C1OUT
RA3/AN3/VREF+
RA2/AN2/VREF-/CVREF
RA1/AN1
RA0/AN0
LCD20X4
LCD2004A
VSS
VDD
V0
RS
RW
E
DB0
DB1
DB2
DB3
DB4
DB5
DB6
DB7
A
K
3.3V
U5
W206A-2-503(10K)
KHỐI HIỂN THỊ
NAP
RESET
VCC
GND
PGD
PGC
HDR-F-2.54_1x6
RA0
RA1
RA2
R5
1k
R6
1k
R7
1k
LED5
LED3
LED4
LED-TH-3mm_R
TITLE:
HỆ THỐNG XÁC THỰC THÔNG MINH
REV: 1.0
Company: UNIVERSITY OF SCIENCE
Sheet: 1/1
Date: 2023-06-08
Drawn By: NHÓM 24