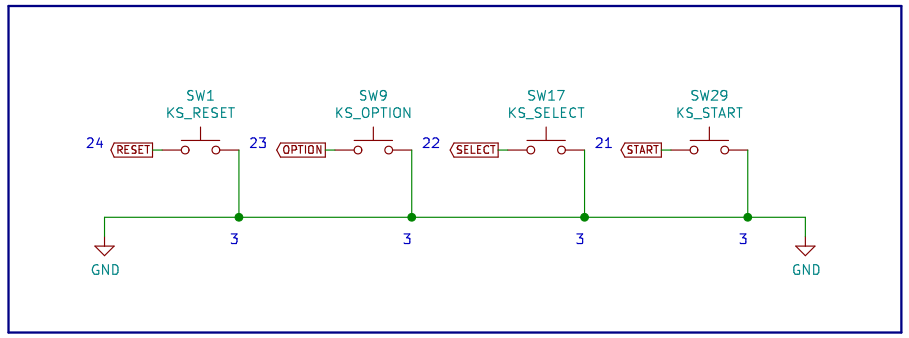

FUNCTION KEYS: HELP, START, SELECT, OPTION and RESET
Those keys should be reused from original

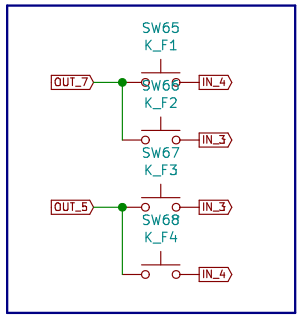

EXTRA FUNCTION KEYS (as Atari 1200XL) F1, F2, F3, F4

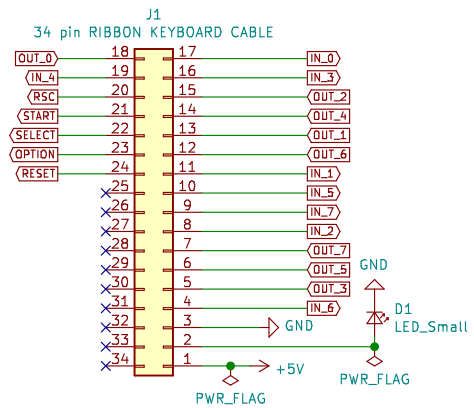

MountingHole H4
MountingHole H3
MountingHole H2
MountingHole H1

CHERRY MX BASED
FOR ANY ATARI XE LINE OF COMPUTERS
A PCB KEYBOARD AS DROP IN REPLACEMENT
RetroBitLab Tech Guy

Sheet: /
File: A130XE_KB_MX.sch

Title: ATARI XE KEYBOARD PCB

Size: A3	Date: 2020-10-10	**Rev: 0.1**
KiCad E.D.A. kicad 5.0.2+dfsg1-1		Id: 1/1