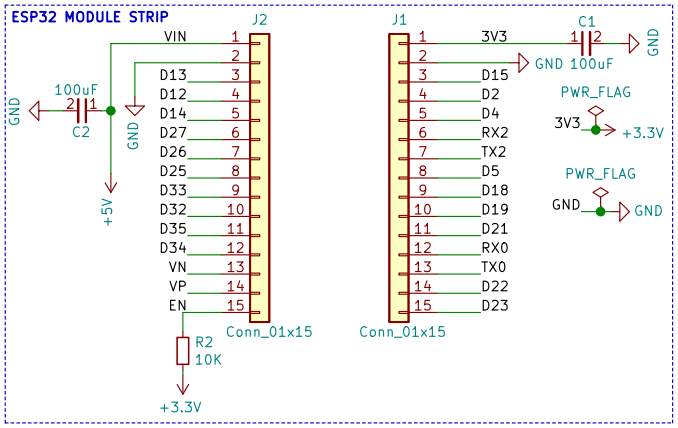

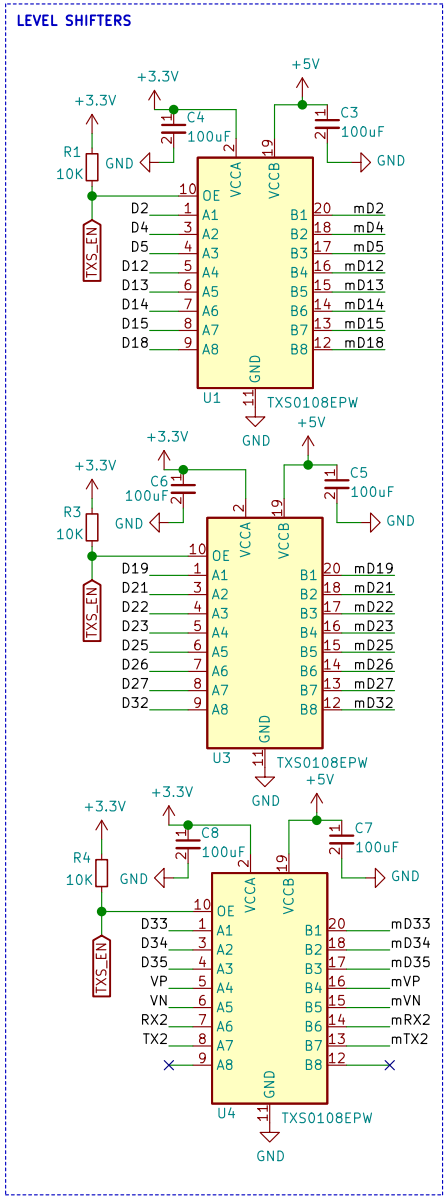

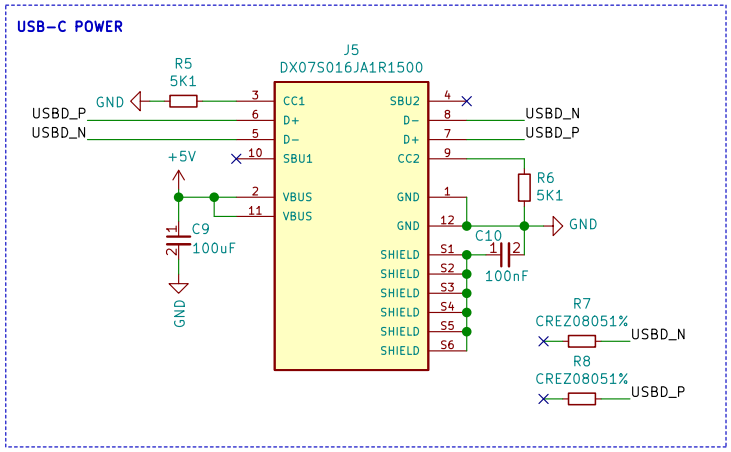

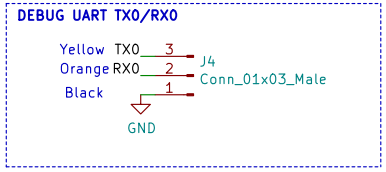

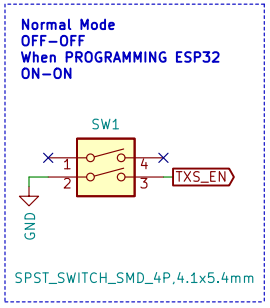

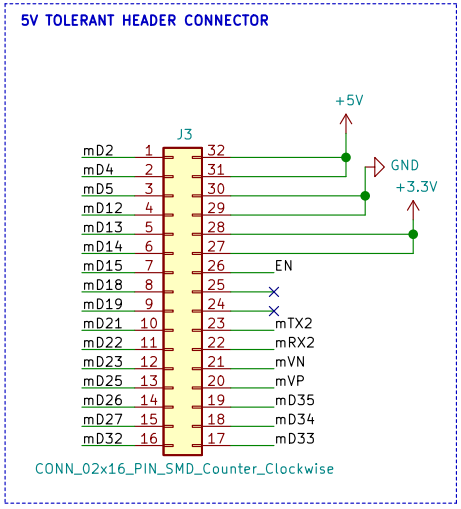

GR1
LOGO

Do not connect USB ESP32
__and__
USB J5 at the same time!

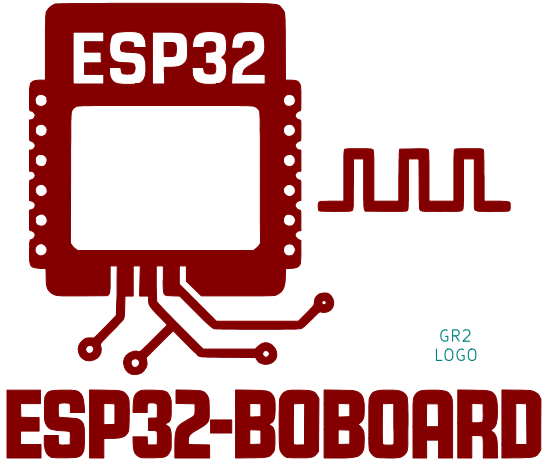

GR2
LOGO

Gianluca Renzi
RetroBit Lab

Sheet: /
File: ESP32-BOBOARD-5V.sch

Title: ESP32 BreakoutBoard 5V

Size: A4	Date: 2025-09-19	**Rev: 1.1**
KiCad E.D.A. kicad 5.1.9+dfsg1-1+deb11u1		Id: 1/1