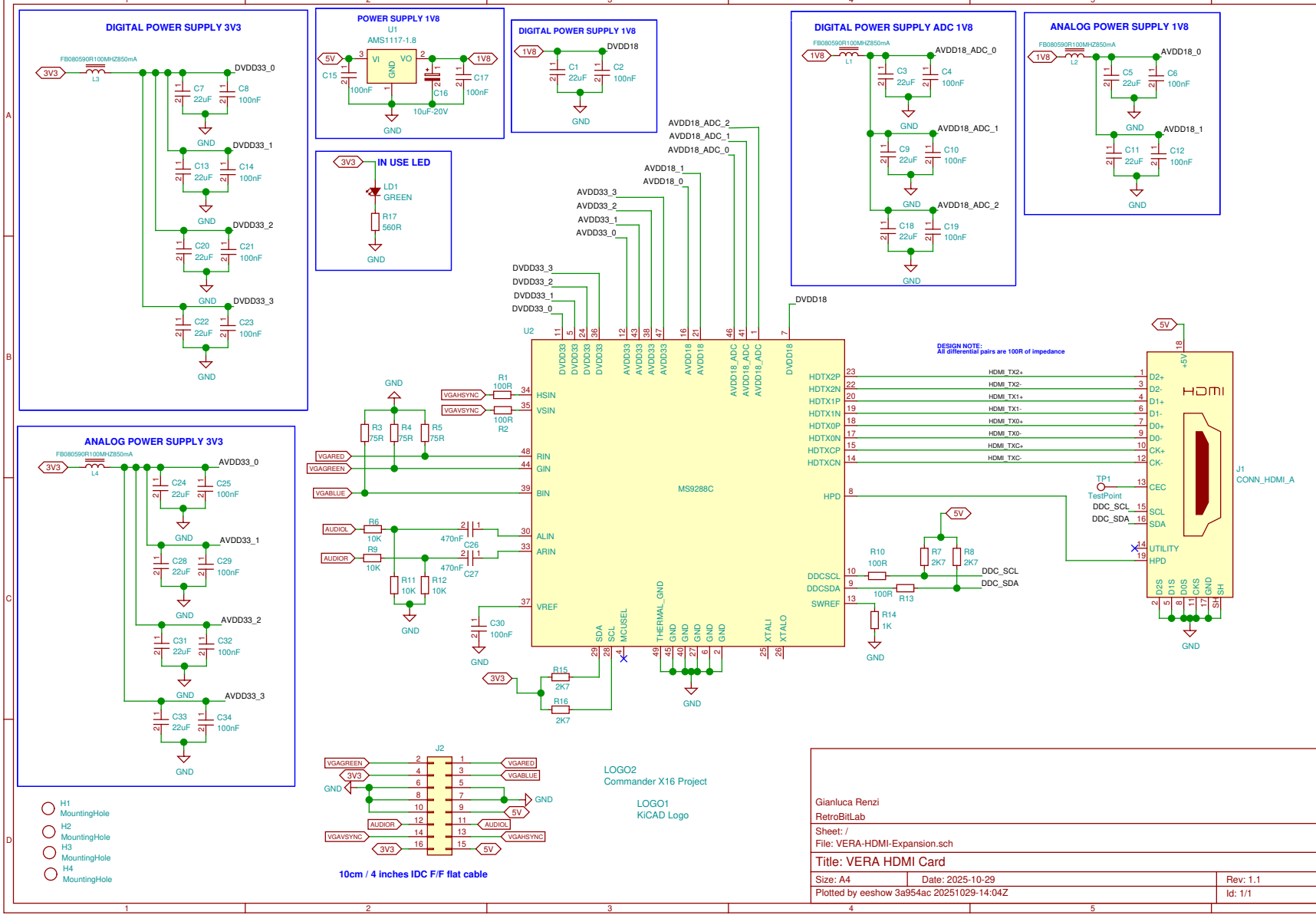
DIGITAL POWER SUPPLY 3V3
FB080590R100MHZ850mA
3V3
L3
DVDD33_0
C7 22uF
C8 100nF
GND
DVDD33_1
C13 22uF
C14 100nF
DVDD33_2
C20 22uF
C21 100nF
DVDD33_3
C22 22uF
C23 100nF
POWER SUPPLY 1V8
U1
AMS1117-1.8
5V
VI
VO
GND
1V8
C15 100nF
C16 10uF-20V
C17 100nF
DIGITAL POWER SUPPLY 1V8
DVDD18
C1 22uF
C2 100nF
IN USE LED
LD1
GREEN
R17
560R
DIGITAL POWER SUPPLY ADC 1V8
FB080590R100MHZ850mA
L1
AVDD18_ADC_0
C3 22uF
C4 100nF
AVDD18_ADC_1
C9 22uF
C10 100nF
AVDD18_ADC_2
C18 22uF
C19 100nF
ANALOG POWER SUPPLY 1V8
FB080590R100MHZ850mA
L2
AVDD18_0
C5 22uF
C6 100nF
AVDD18_1
C11 22uF
C12 100nF
ANALOG POWER SUPPLY 3V3
FB080590R100MHZ850mA
L4
AVDD33_0
C24 22uF
C25 100nF
AVDD33_1
C28 22uF
C29 100nF
AVDD33_2
C31 22uF
C32 100nF
AVDD33_3
C33 22uF
C34 100nF
AVDD18_ADC_2
AVDD18_ADC_1
AVDD18_ADC_0
AVDD18_1
AVDD18_0
AVDD33_3
AVDD33_2
AVDD33_1
AVDD33_0
DVDD33_3
DVDD33_2
DVDD33_1
DVDD33_0
DVDD18
U2
MS9288C
DVDD33
AVDD33
AVDD18
AVDD18_ADC
HSIN
VSIN
RIN
GIN
BIN
ALIN
ARIN
VREF
SDA
SCL
MCUSEL
THERMAL_GND
XTALI
XTALO
HDTX2P
HDTX2N
HDTX1P
HDTX1N
HDTX0P
HDTX0N
HDTXCP
HDTXCN
HPD
DDCSCL
DDCSDA
SWREF
VGAHSYNC
VGAVSYNC
VGARED
VGAGREEN
VGABLUE
AUDIOL
AUDIOR
R1 100R
R2 100R
R3 75R
R4 75R
R5 75R
R6 10K
R9 10K
R11 10K
R12 10K
C26 470nF
C27 470nF
C30 100nF
R15 2K7
R16 2K7
R10 100R
R13 100R
R14 1K
R7 2K7
R8 2K7
DDC_SCL
DDC_SDA
DESIGN NOTE:
All differential pairs are 100R of impedance
HDMI_TX2+
HDMI_TX2-
HDMI_TX1+
HDMI_TX1-
HDMI_TX0+
HDMI_TX0-
HDMI_TXC+
HDMI_TXC-
TP1
TestPoint
CEC
SCL
SDA
UTILITY
HPD
+5V
D2+
D2-
D1+
D1-
D0+
D0-
CK+
CK-
D2S
D1S
D0S
CKS
SH
J1
CONN_HDMI_A
J2
LOGO2
Commander X16 Project
LOGO1
KiCAD Logo
H1 MountingHole
H2 MountingHole
H3 MountingHole
H4 MountingHole
10cm / 4 inches IDC F/F flat cable
Gianluca Renzi
RetroBitLab
Sheet: /
File: VERA-HDMI-Expansion.sch
Title: VERA HDMI Card
Size: A4
Date: 2025-10-29
Rev: 1.1
Plotted by eeshow 3a954ac 20251029-14:04Z
Id: 1/1