Sheet: VeraModule

VERA FPGA

File: vera-fpga.sch

Sheet: BusDecoder

BUS DECODER

File: busdecoder.sch

Sheet: Vera FPGA flash

VERA SPI FLASH
SD CARD INTERFACE

File: vera-fpga-flash.sch

Sheet: CartridgeInterface

CARTRIDGE INTERFACE

File: cartridgeInterface.sch

Sheet: PowerSupply

POWER SUPPLY

File: powersupply.sch

Sheet: VGA Analog

VGA ANALOG

File: vga-analog.sch

FIDUCIAL TOP

FID3 Fiducial
FID4 Fiducial

FIDUCIAL BOTTOM

FID2 Fiducial
FID1 Fiducial

LOGO1
VERA X16 LOGO

LOGO2
ATARI READY

LOGO3
KiCAD DESIGN

LOGO4
ATARI DUO BUS

LOGO5
ESP32_BOBOARD

LBL1

H1
MountingHole

H2
MountingHole

Gianluca Renzi
RetroBit Lab

Sheet: /
File: VERA-MODULE-RBL.sch

Title: VERA FPGA Audio & Video Board

Size: A4	Date: 2025-10-17	**Rev: 1.0**
KiCad E.D.A. kicad 5.1.9+dfsg1-1+deb11u1		Id: 1/7

FPGA VERA LOGIC VIDEO & AUDIO CARD

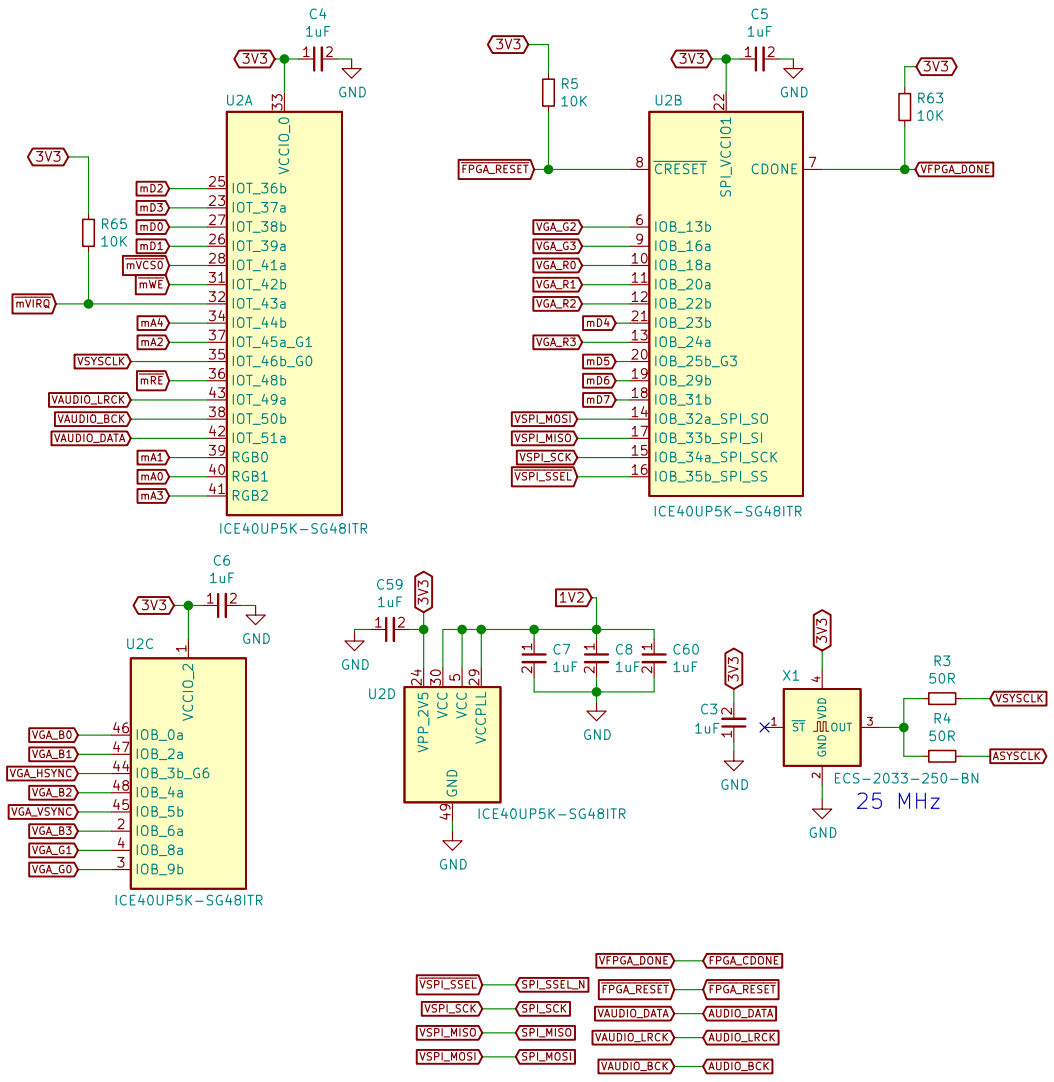

iceprog programmer USB FTDI / SPI

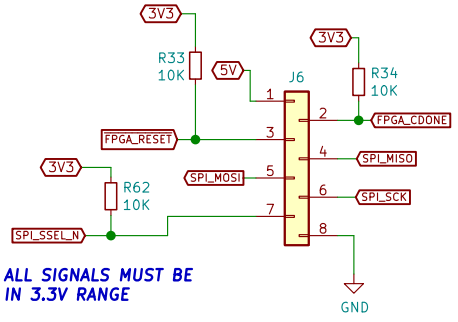

ALL SIGNALS MUST BE IN 3.3V RANGE

VERA FPGA PROGRAMMED OK

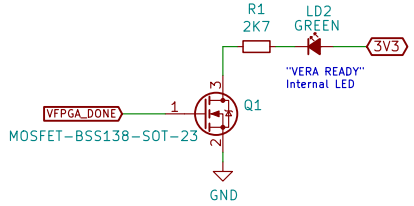

Gianluca Renzi
RetroBit Lab

Sheet: /VeraModule/
File: vera-fpga.sch

Title: VERA MODULE AND PROGRAMMING CONNECTOR

Size: A4	Date: 2025-10-17	**Rev: 1.0**
KiCad E.D.A. kicad 5.1.9+dfsg1-1+deb11u1		Id: 2/7

PBI Bus Interface Decoder:
$D1XX, $D1FF, MPD, $D8XX–$DFXX, EX(T)SEL

PBI DEVICE ID: software selectable only

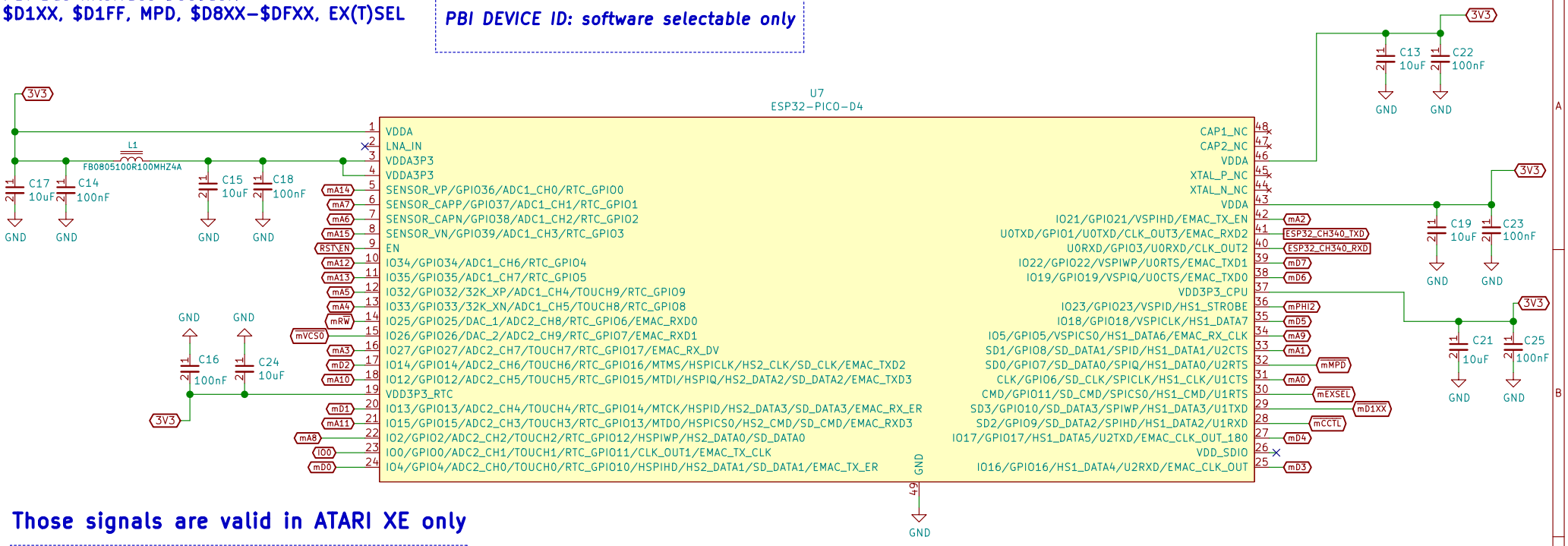

Those signals are valid in ATARI XE only

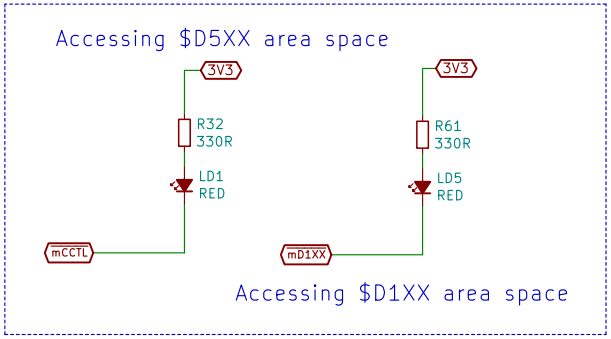

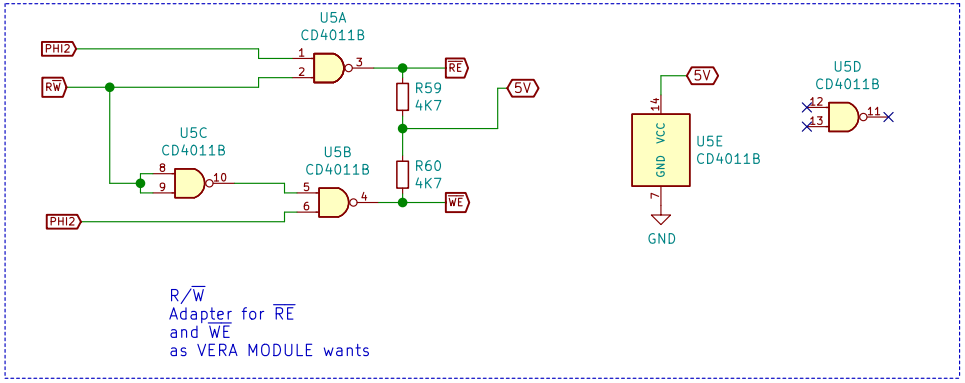

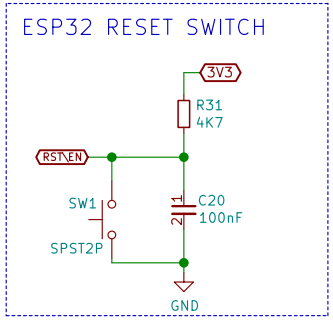

Enternal Memory Setup:
The range must be defined in software
EXSEL

In PBI Atari XL there is EXTENB signal output and EXTSEL signal input
In PBI Atari XE there is only the EXSEL signal output

mVCS0 active & A15..A0 $D8XX–$DFXX –> MPD active (Internal 2K ROM)

$D1FF access & DATABUS = PBI DEVICE ID –> mVCS0 active/deactive

Gianluca Renzi
RetroBit Lab

Sheet: /BusDecoder/
File: busdecoder.sch

Title: BUS DECODER

Size: A4	Date: 2025-10-17	**Rev: 1.0**
KiCad E.D.A. kicad 5.1.9+dfsg1-1+deb11u1		Id: 3/7

ATARI 130XE ECI & CARTRIDGE INTERFACE

All 8-Bit signals must be shifted from 5V to 3.3V and vice versa

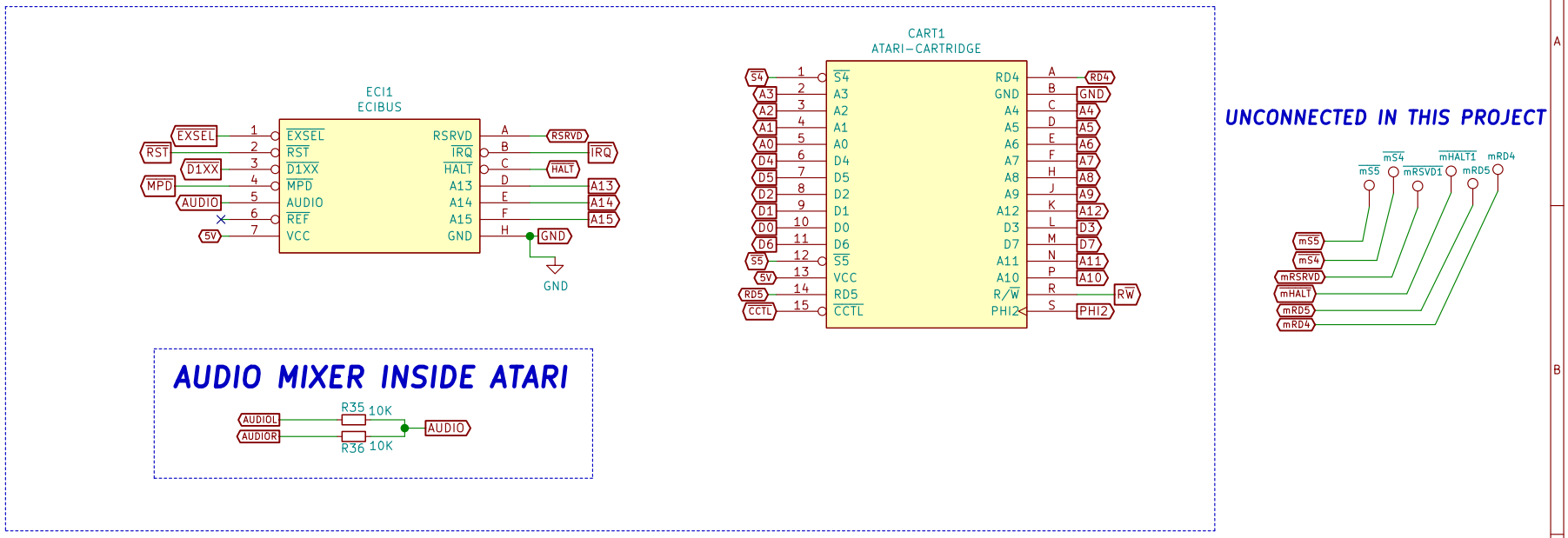

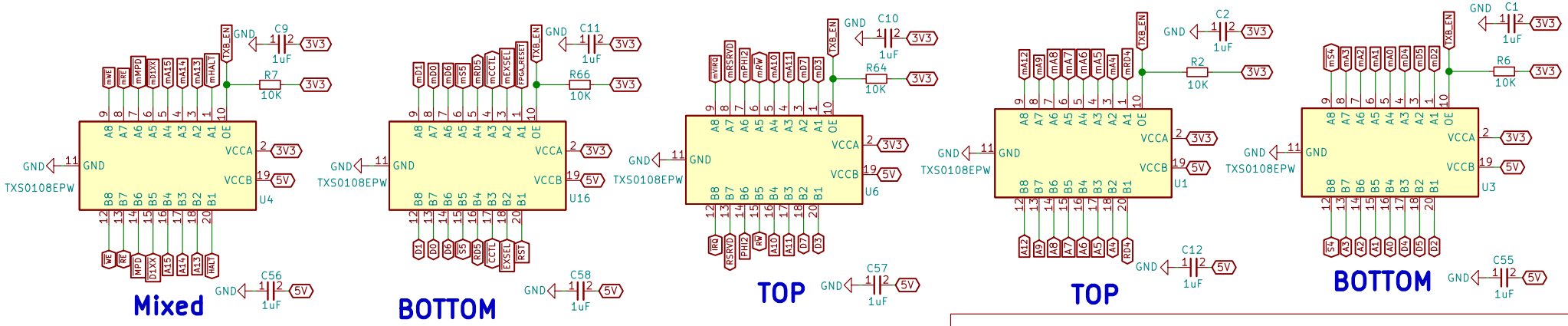

BUS LOGIC LEVEL SHIFTERS

Gianluca Renzi
RetroBit Lab

Sheet: /CartridgeInterface/
File: cartridgeInterface.sch

Title: CARTRIDGE INTEFACE AND BUS LEVEL SHIFTERS

Size: A4	Date: 2025-10-17	**Rev: 1.0**
KiCad E.D.A. kicad 5.1.9+dfsg1-1+deb11u1		Id: 4/7

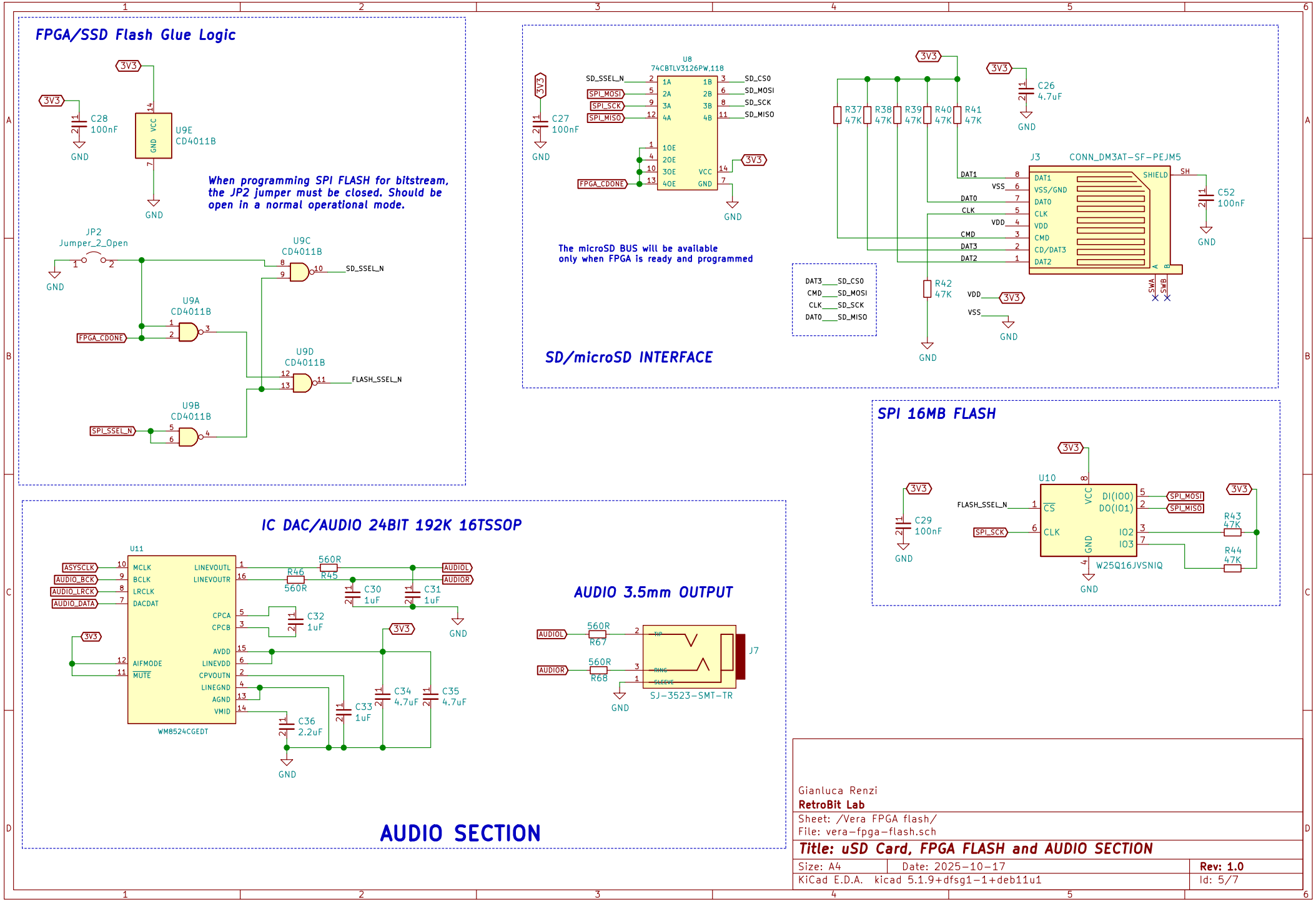
FPGA/SSD Flash Glue Logic
3V3
C28
100nF
GND
U9E
CD4011B
When programming SPI FLASH for bitstream, the JP2 jumper must be closed. Should be open in a normal operational mode.
JP2
Jumper_2_Open
U9C
CD4011B
SD_SSEL_N
U9A
CD4011B
FPGA_CDONE
U9D
CD4011B
FLASH_SSEL_N
U9B
CD4011B
SPI_SSEL_N
U8
74CBTLV3126PW,118
SD_SSEL_N
SPI_MOSI
SPI_SCK
SPI_MISO
SD_CS0
SD_MOSI
SD_SCK
SD_MISO
C27
100nF
The microSD BUS will be available only when FPGA is ready and programmed
R37
47K
R38
47K
R39
47K
R40
47K
R41
47K
C26
4.7uF
J3
CONN_DM3AT-SF-PEJM5
DAT1
VSS/GND
DAT0
CLK
VDD
CMD
CD/DAT3
DAT2
SHIELD
SH
C52
100nF
DAT3 SD_CS0
CMD SD_MOSI
CLK SD_SCK
DAT0 SD_MISO
R42
47K
SD/microSD INTERFACE
SPI 16MB FLASH
U10
FLASH_SSEL_N
SPI_SCK
CS
CLK
VCC
GND
DI(IO0)
DO(IO1)
IO2
IO3
W25Q16JVSNIQ
C29
100nF
R43
47K
R44
47K
IC DAC/AUDIO 24BIT 192K 16TSSOP
U11
ASYSCLK
AUDIO_BCK
AUDIO_LRCK
AUDIO_DATA
MCLK
BCLK
LRCLK
DACDAT
LINEVOUTL
LINEVOUTR
CPCA
CPCB
AVDD
AIFMODE
MUTE
LINEVDD
CPVOUTN
LINEGND
AGND
VMID
WM8524CGEDT
R46
560R
R45
560R
AUDIOL
AUDIOR
C30
1uF
C31
1uF
C32
1uF
C33
1uF
C34
4.7uF
C35
4.7uF
C36
2.2uF
AUDIO 3.5mm OUTPUT
R67
560R
R68
560R
J7
SJ-3523-SMT-TR
AUDIO SECTION
Gianluca Renzi
RetroBit Lab
Sheet: /Vera FPGA flash/
File: vera-fpga-flash.sch
Title: uSD Card, FPGA FLASH and AUDIO SECTION
Size: A4
Date: 2025-10-17
Rev: 1.0
KiCad E.D.A. kicad 5.1.9+dfsg1-1+deb11u1
Id: 5/7

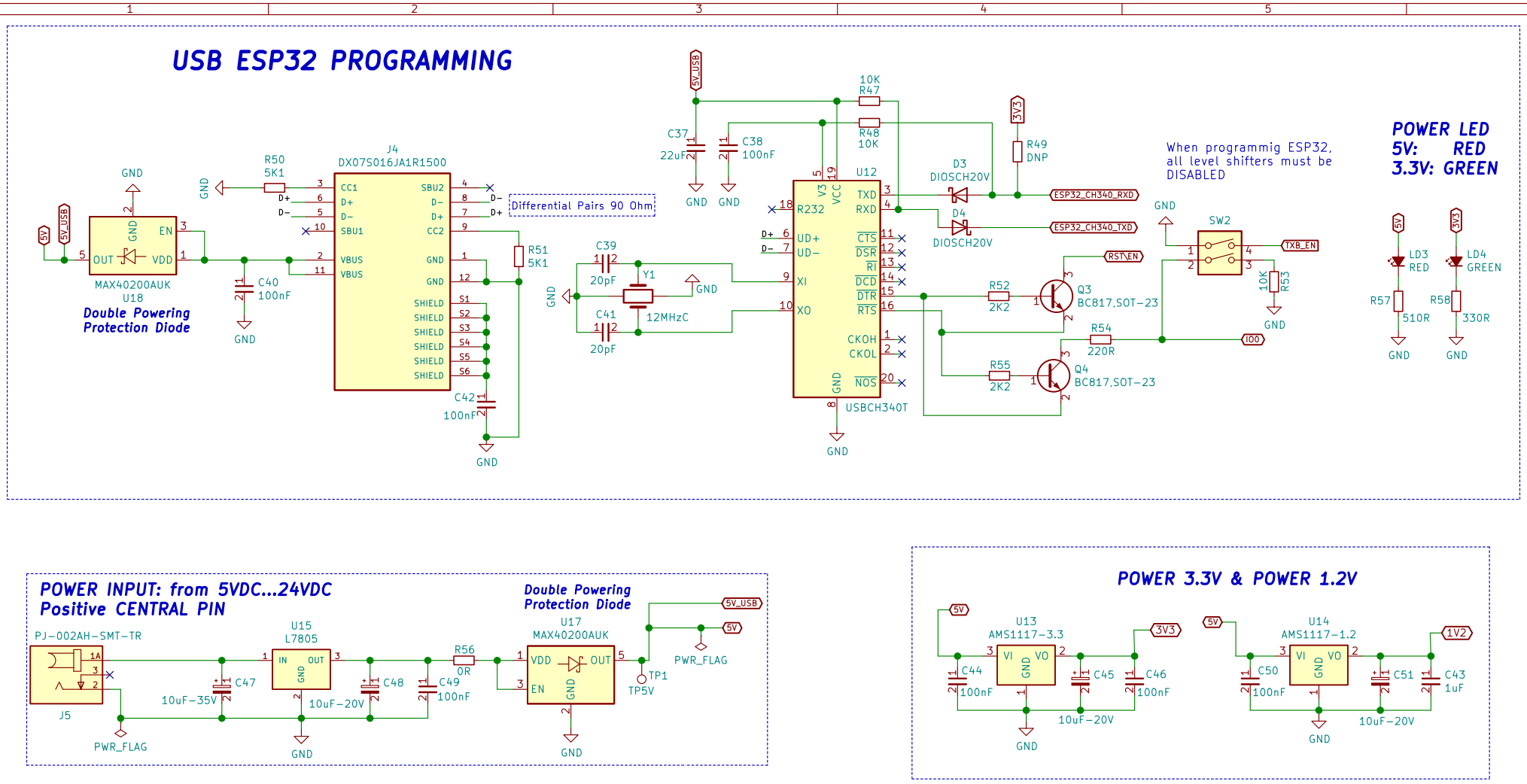

Gianluca Renzi
RetroBit Lab

Sheet: /PowerSupply/
File: powersupply.sch

Title: POWERSUPPLY and USB

Size: A4	Date: 2025-10-17	Rev: 1.0
KiCad E.D.A. kicad 5.1.9+dfsg1-1+deb11u1		Id: 6/7

ANALOG VGA SIGNALS

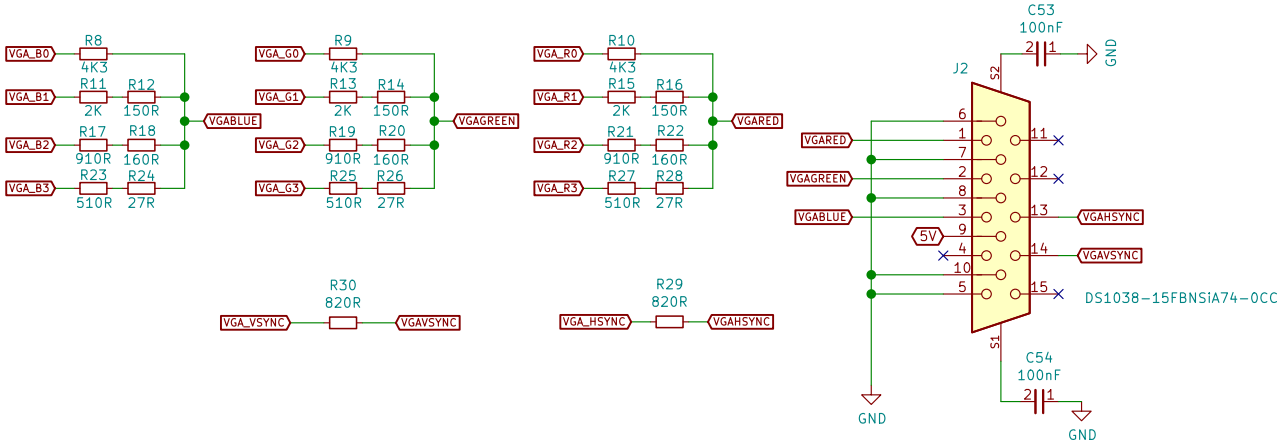

EXTERNAL VIDEO CONNECTOR

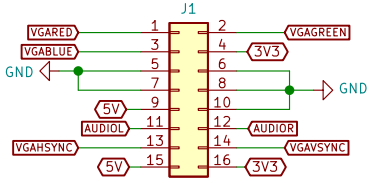

EXTERNAL DISPLAY WITH AUDIO

Gianluca Renzi
RetroBit Lab

Sheet: /VGA Analog/
File: vga-analog.sch

Title: VGA ANALOG AND EXTERNAL VIDEO CONNECTOR

Size: A4	Date: 2025-10-17	**Rev: 1.0**
KiCad E.D.A. kicad 5.1.9+dfsg1-1+deb11u1		Id: 7/7