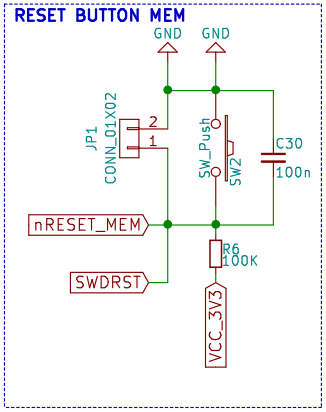

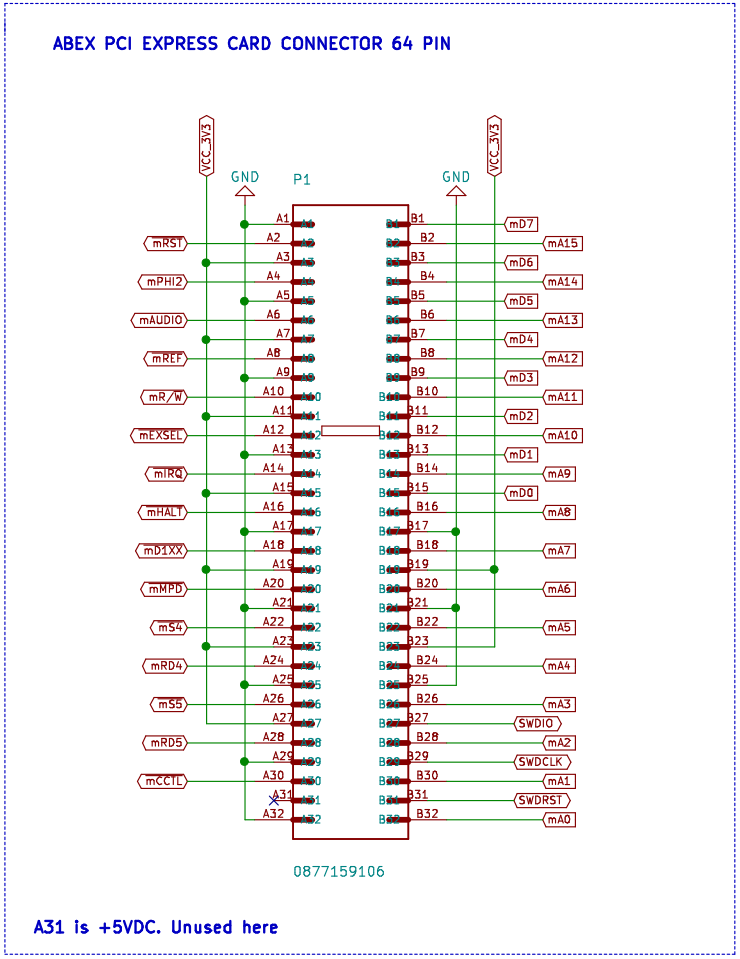

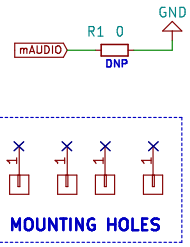

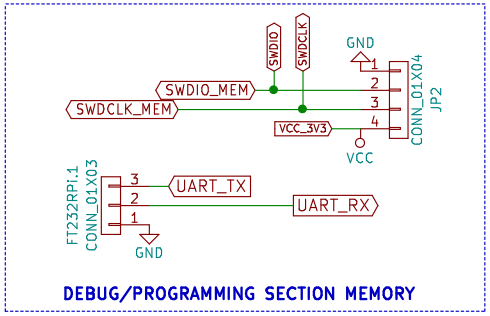

For ABEX Bus Extender
ABEX BUS EXPANSION CARTRIDGE BOARD
microSD Cartridge Emulator
CARTRIDGE Emulator like UnoCart
RetrobitLab

Sheet: /
File: abex-duocart.sch

Title: ATARI XE DUO CART CARTRIDGE EMULATOR

Size: A4	Date: 2019-05-25	Rev:
KiCad E.D.A. kicad 4.0.2+dfsg1-stable		Id: 1/2

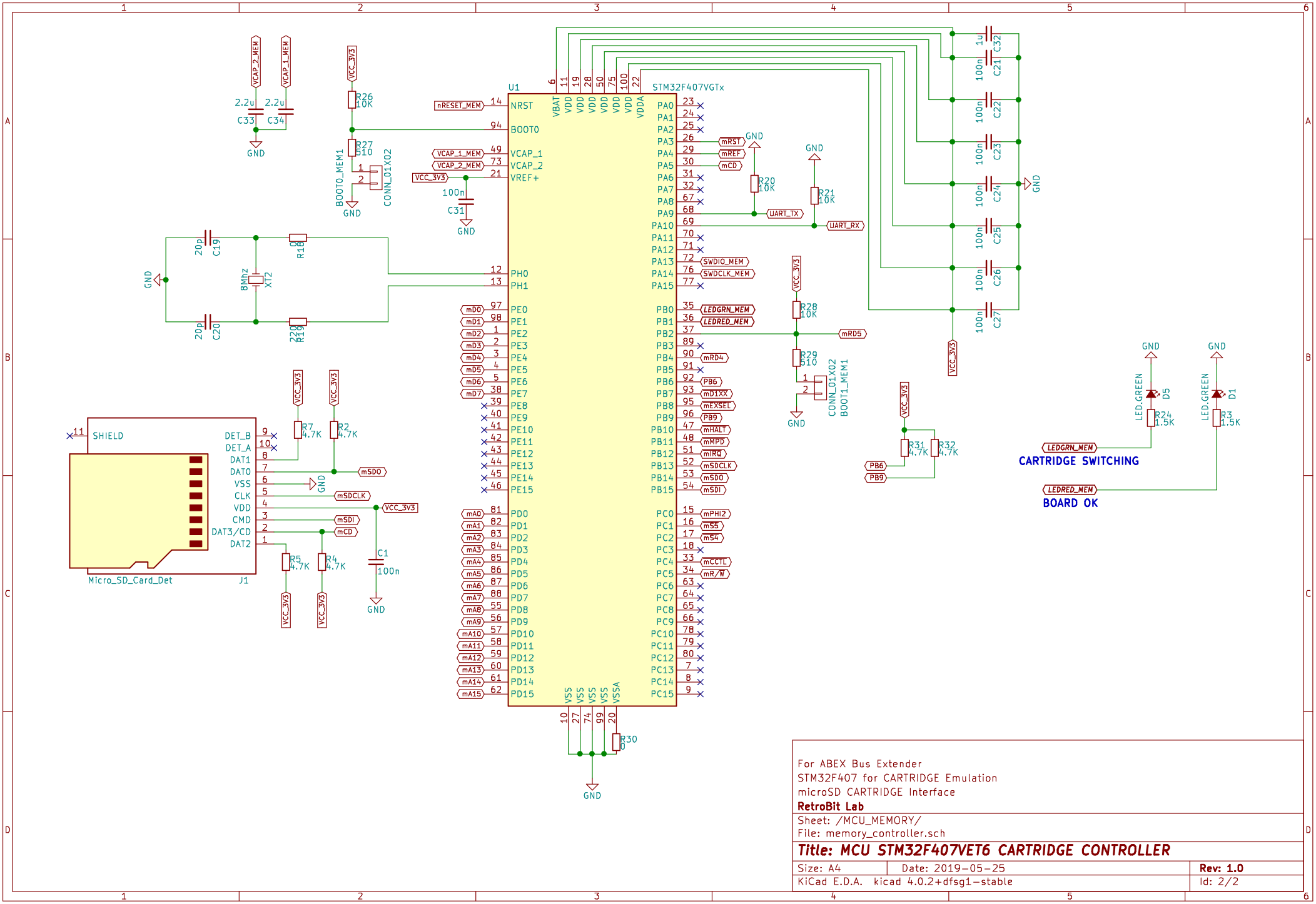

For ABEX Bus Extender
STM32F407 for CARTRIDGE Emulation
microSD CARTRIDGE Interface
RetroBit Lab

Sheet: /MCU_MEMORY/
File: memory_controller.sch

Title: MCU STM32F407VET6 CARTRIDGE CONTROLLER

Size: A4	Date: 2019-05-25	Rev: 1.0
KiCad E.D.A. kicad 4.0.2+dfsg1-stable		Id: 2/2