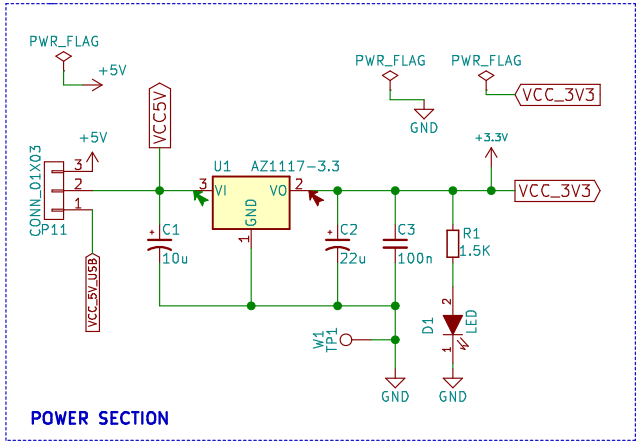

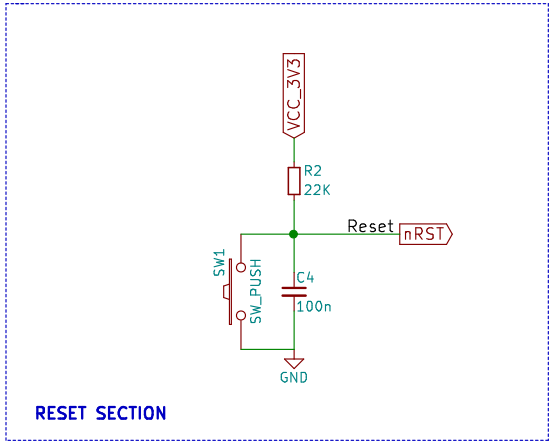

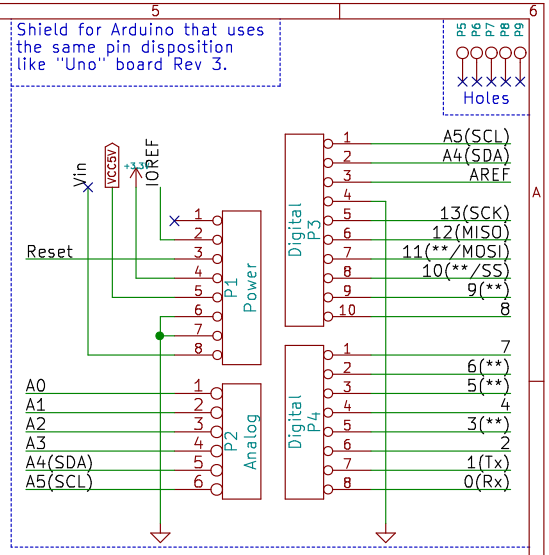

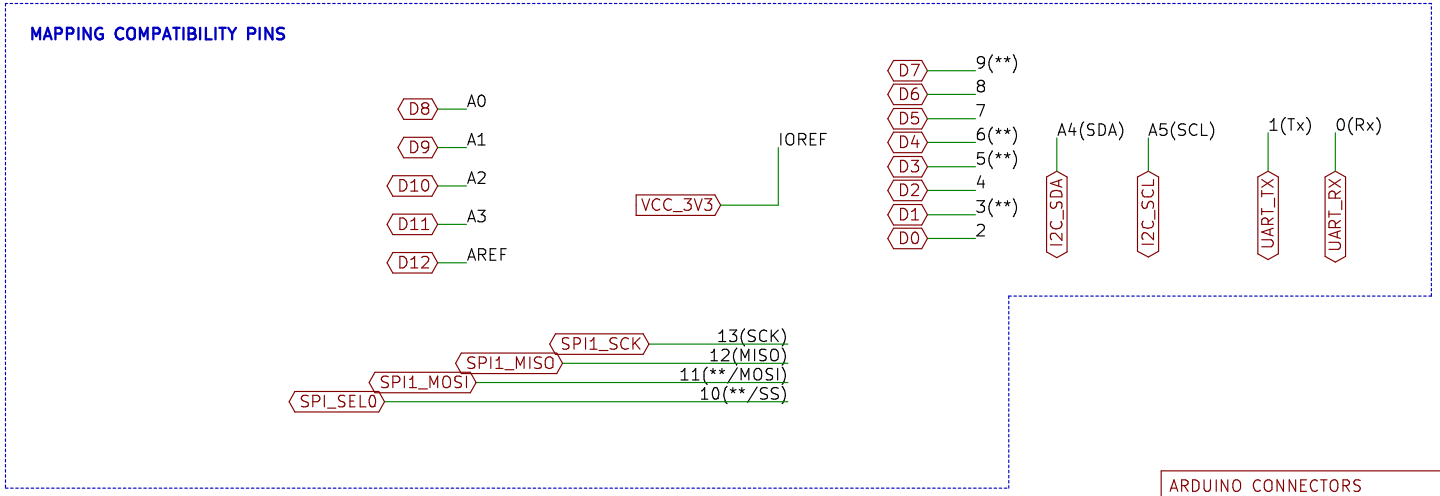

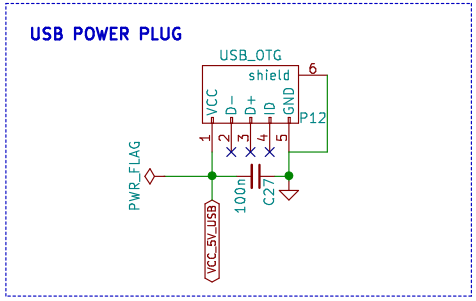

ARDUINO CONNECTORS

Arduino Shield Layout

RetroBit Lab

Sheet: /

File: stduinof429.sch

Title: STM32Duino429

Size: A4	Date: lun. 30 mars 2015	**Rev: 1.0**
KiCad E.D.A. kicad 4.0.2+dfsg1-stable		Id: 1/2

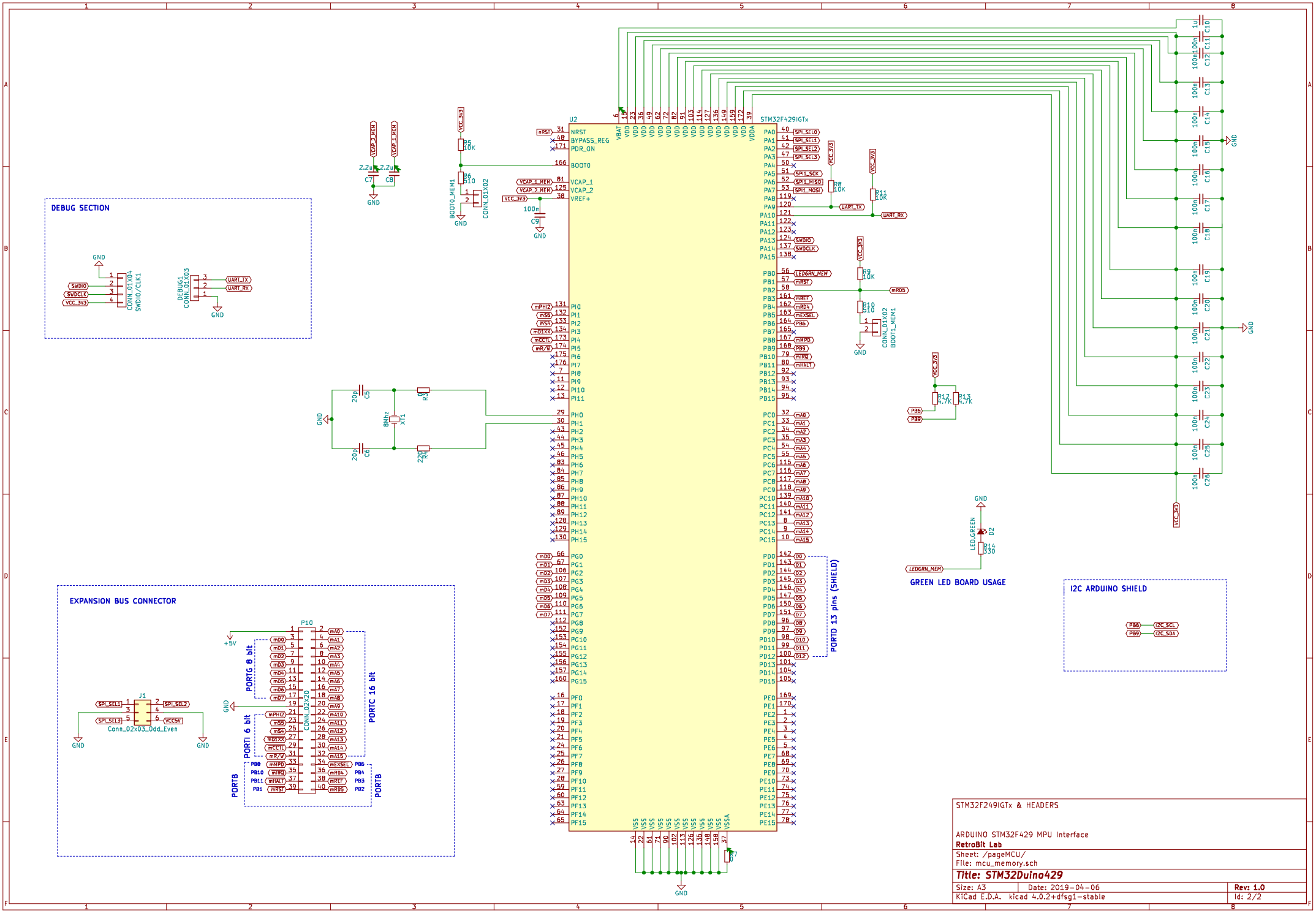
DEBUG SECTION
EXPANSION BUS CONNECTOR
GREEN LED BOARD USAGE
I2C ARDUINO SHIELD
U2
STM32F429IGTx
PORTD 13 pins (SHIELD)
PORTG 8 bit
PORTC 16 bit
PORTI 6 bit
PORTB
P10
J1
Conn_02x03_Odd_Even
CONN_02X20
CONN_01X04
SWDIO/CLK1
DEBUG1
CONN_01X03
BOOT0_MEM1
BOOT1_MEM1
CONN_01X02
8MHz
X1
LED_GREEN
D2
STM32F249IGTx & HEADERS
ARDUINO STM32F429 MPU Interface
RetroBit Lab
Sheet: /pageMCU/
File: mcu_memory.sch
Title: STM32Duino429
Size: A3
Date: 2019-04-06
Rev: 1.0
KiCad E.D.A. kicad 4.0.2+dfsg1-stable
Id: 2/2