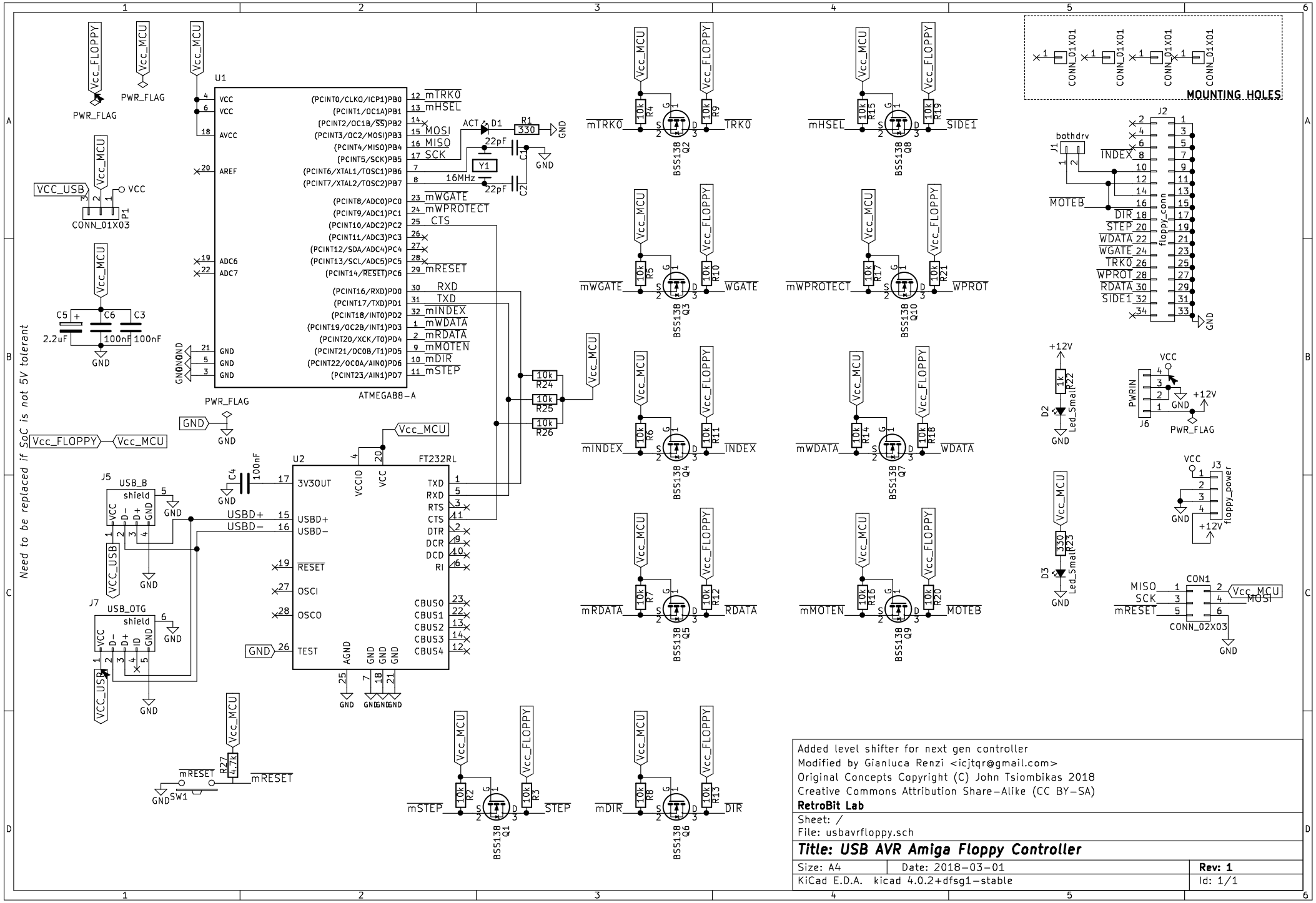
U1
ATMEGA88-A
U2
FT232RL
J5
USB_B
J7
USB_OTG
J2
floppy_conn
J1
bothdrv
J3
floppy_power
J6
PWRIN
CON1
CONN_02X03
CONN_01X03
P1
SW1
Y1
16MHz
22pF
C1
C2
C3
C4
C5
C6
2.2uF
100nF
R1
330
R27
4.7k
R24
R25
R26
R2
R3
R4
R5
R6
R7
R8
R9
R10
R11
R12
R13
R14
R15
R16
R17
R18
R19
R20
R21
R22
R23
10k
1k
D1
D2
D3
Led_Small
BSS138
Q1
Q2
Q3
Q4
Q5
Q6
Q7
Q8
Q9
Q10
MOUNTING HOLES
CONN_01X01
Need to be replaced if SoC is not 5V tolerant
Vcc_FLOPPY
Vcc_MCU
PWR_FLAG
VCC_USB
GND
+12V
VCC
mTRK0
mHSEL
MOSI
MISO
SCK
mWGATE
mWPROTECT
CTS
mRESET
RXD
TXD
mINDEX
mWDATA
mRDATA
mMOTEN
mDIR
mSTEP
TRK0
SIDE1
WGATE
WPROT
INDEX
WDATA
RDATA
MOTEB
STEP
DIR
USBD+
USBD−
ACT
Added level shifter for next gen controller
Modified by Gianluca Renzi <icjtqr@gmail.com>
Original Concepts Copyright (C) John Tsiombikas 2018
Creative Commons Attribution Share-Alike (CC BY-SA)
RetroBit Lab
Sheet: /
File: usbavrfloppy.sch
Title: USB AVR Amiga Floppy Controller
Size: A4
Date: 2018-03-01
Rev: 1
KiCad E.D.A. kicad 4.0.2+dfsg1-stable
Id: 1/1