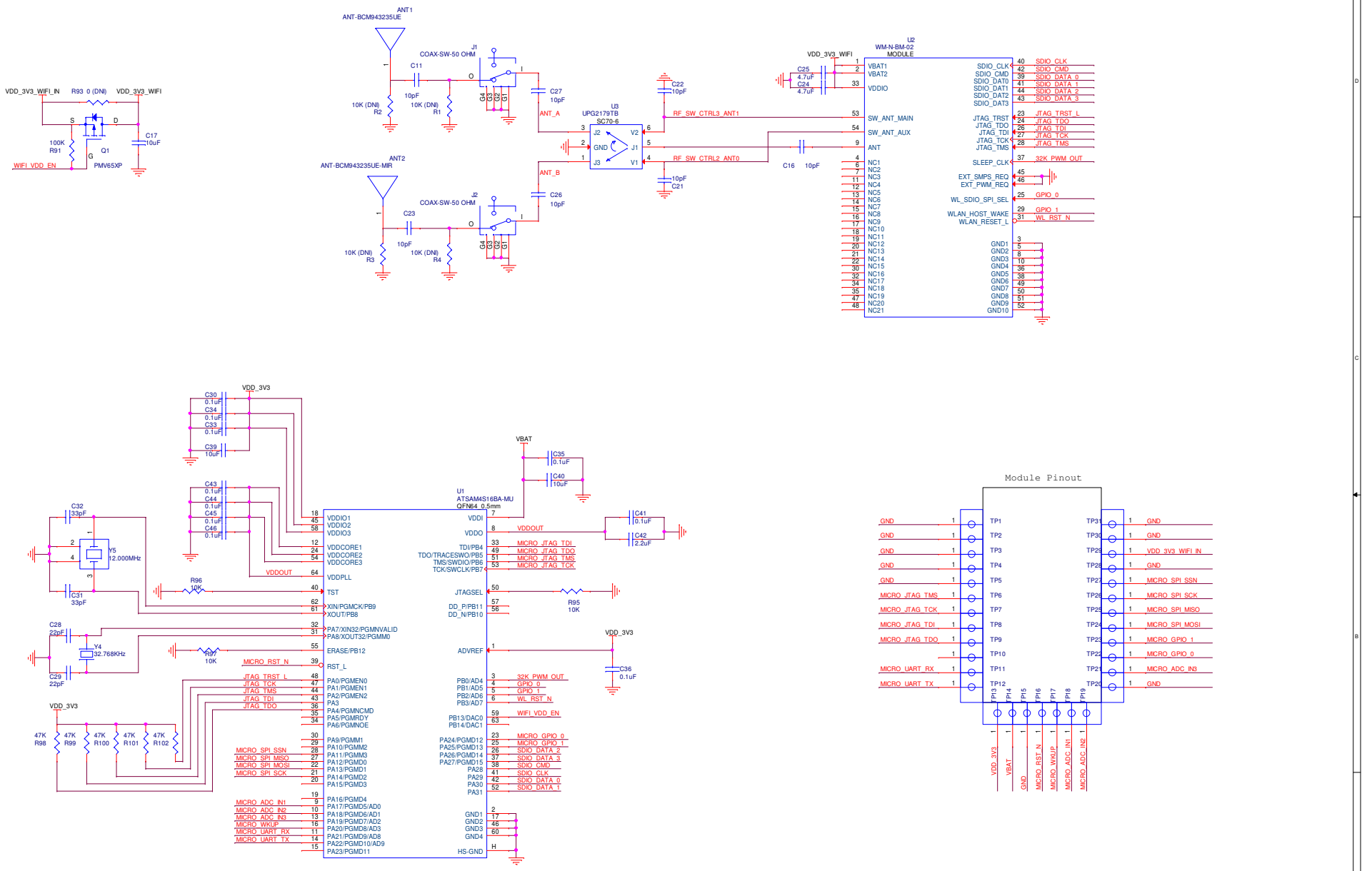

PC1
PCB NUMBER: 200-125315-0010
PCB NAME: BCM943362WCD8_1

ZHI
SCHEMATIC DIAGRAM

Broadcom Corporation

<OrgAddr1>
<OrgAddr2>
<OrgAddr3>

BCM943362WCD8_1

Size	DWG NO	Rev
C	824-125315-0010	Rev 01

Wednesday, January 30, 2013

Scale

Sheet 1 of 1