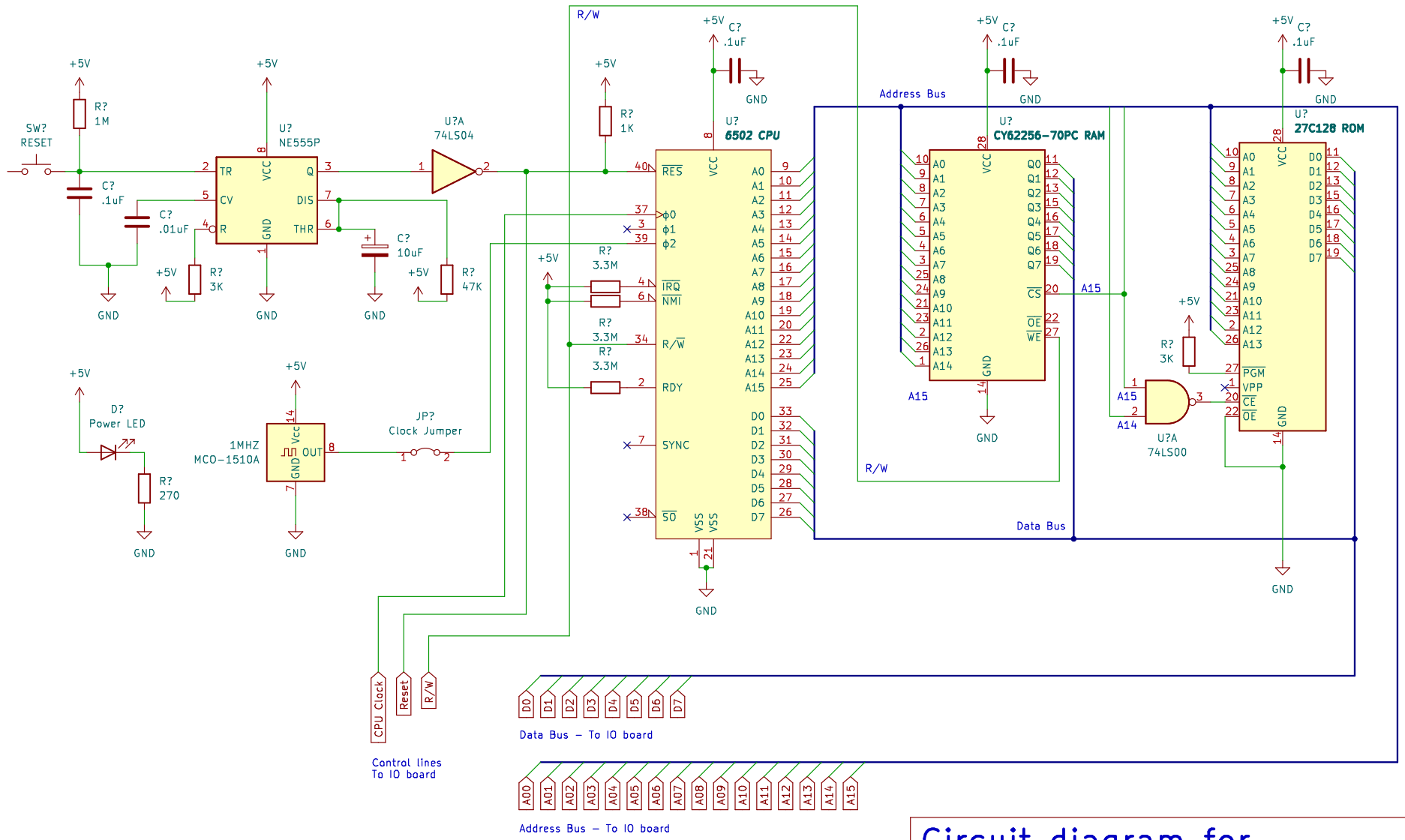

Circuit diagram for GAVDAN-2 Microcomputer

Sheet: /
File: gavdan-2-main-board.kicad_sch

Title: GAVDAN-2 Main Board

Size: A4	Date: 09 October 2022	**Rev: 1.0**
KiCad E.D.A. kicad 6.0.2+dfsg-1		Id: 1/1