REVISIONS			
REV.	DESCRIPTION	DATE	APPROVED
A	REDRAWN; CHANGED TOLERANCES TO .XX ±.1, .X ±.25	8/11/2004	S G CAMPBELL

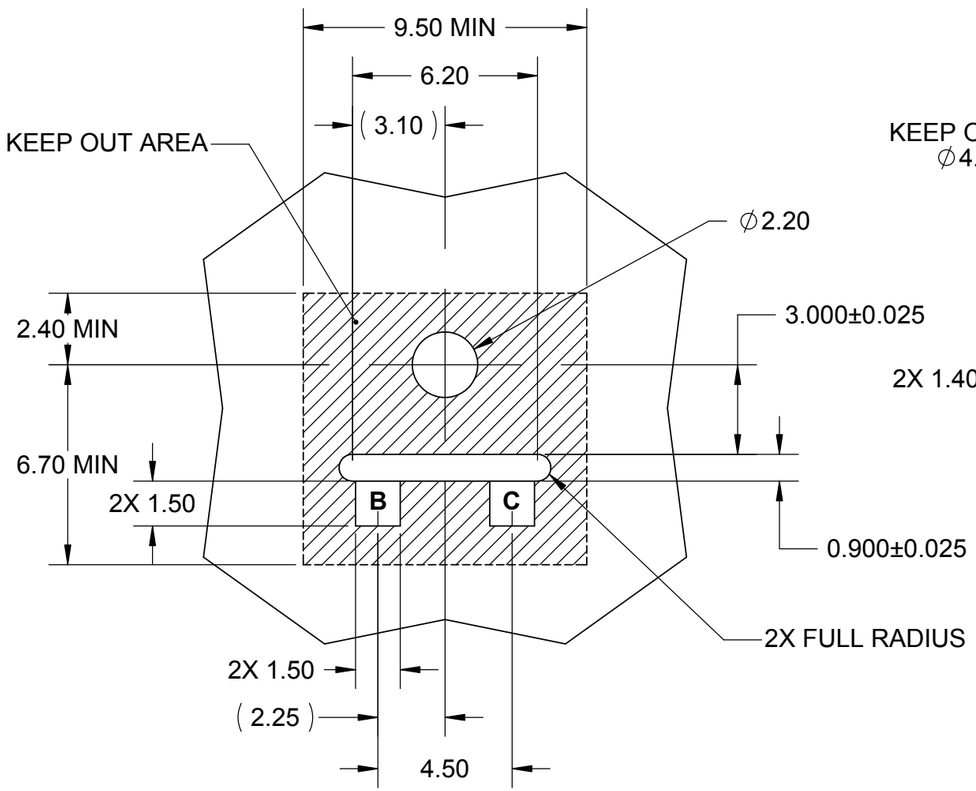

TOP SIDE

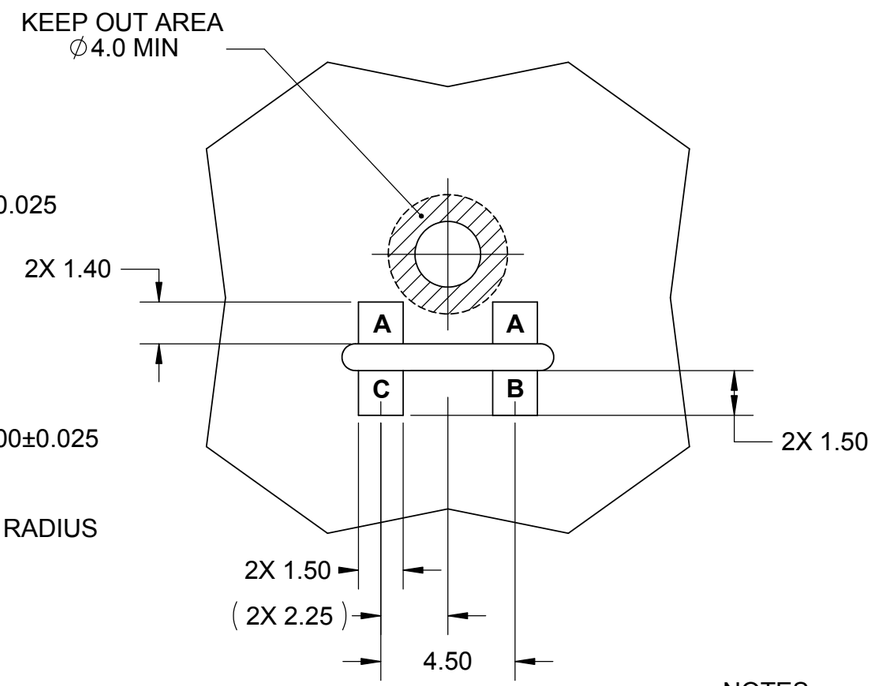

BOTTOM SIDE

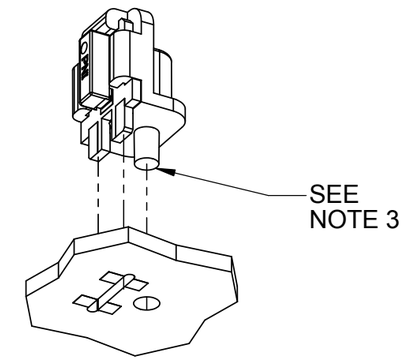

ASSEMBLY WITH P/N 12342

NOTES:
1. PAD CONNECTIONS:
   A - SENSOR SHIELD (BOTTOM SIDE ONLY).
   B - SENSOR POSITIVE (TOP AND BOTTOM SIDES).
   C - SENSOR NEGATIVE (TOP AND BOTTOM SIDES).
2. FOR USE BY END USER FOR MATING PCB INTERFACE LAYOUT.
3. STAKE 12342 INTO PLACE AFTER INSERTION INTO MATING PCB.

PROPRIETARY AND CONFIDENTIAL

THE INFORMATION CONTAINED IN THIS DRAWING IS THE SOLE PROPERTY OF PNI CORP. ANY REPRODUCTION IN PART OR AS A WHOLE WITHOUT THE WRITTEN PERMISSION OF PNI CORP. IS PROHIBITED.

TOLERANCES
DIMENSIONS ARE MILLIMETERS
.X ± .25
.XX ± .10
ANGLES ± .5° (30')

MATERIAL: N/A

FINISH: N/A

DO NOT SCALE DRAWING

CAD GENERATED DRAWING, DO NOT MANUALLY UPDATE

APPROVALS	DATE
DRAWN S G CAMPBELL	08/11/04
CHECKED	

THIRD ANGLE PROJECTION

DOC NO. 1000927

PNI Corp
5464 SKYLANE BLVD. SUITE A
SANTA ROSA, CA 95403-1084
TEL (707) 566-2260
FAX (707) 566-2261
www.pnicorp.com

PCB, MOTHER
LAYOUT CONTROL DRAWING

SIZE	PART NO.	REV.
B	REF 12342	A

SCALE	DWG. NO.	SHEET
5:1	D0010026	1 OF 1

CAD FILE: (D0010026A)Layout, PCB, Mother