/tikz/,/tikz/graphs/
conversions/canvas coordinate/.code=1 ,
conversions/coordinate/.code=1
force
circular

Fundamental Algorithmic Techniques VIII

Outline

Search on Graphs

Advanced notions

Graph Traversals: BFS vs DFS

Breadth First Search

- **Queue** (FIFO)
- Level-order
- Shortest path (unweighted)

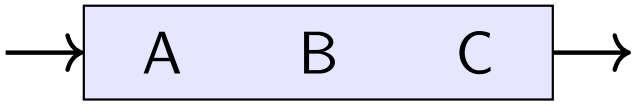

queue (FIFO)

Depth First Search

- **Stack** (LIFO)
- Deep-first, backtrack
- Discovery/finish times
- SCCs = Strongly Connected Components

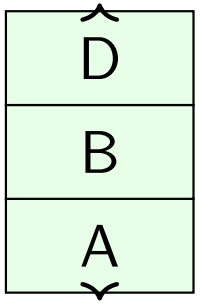

stack (LIFO)

Both solve reachability — BFS: wide, DFS: deep

Breadth First Search in Practice

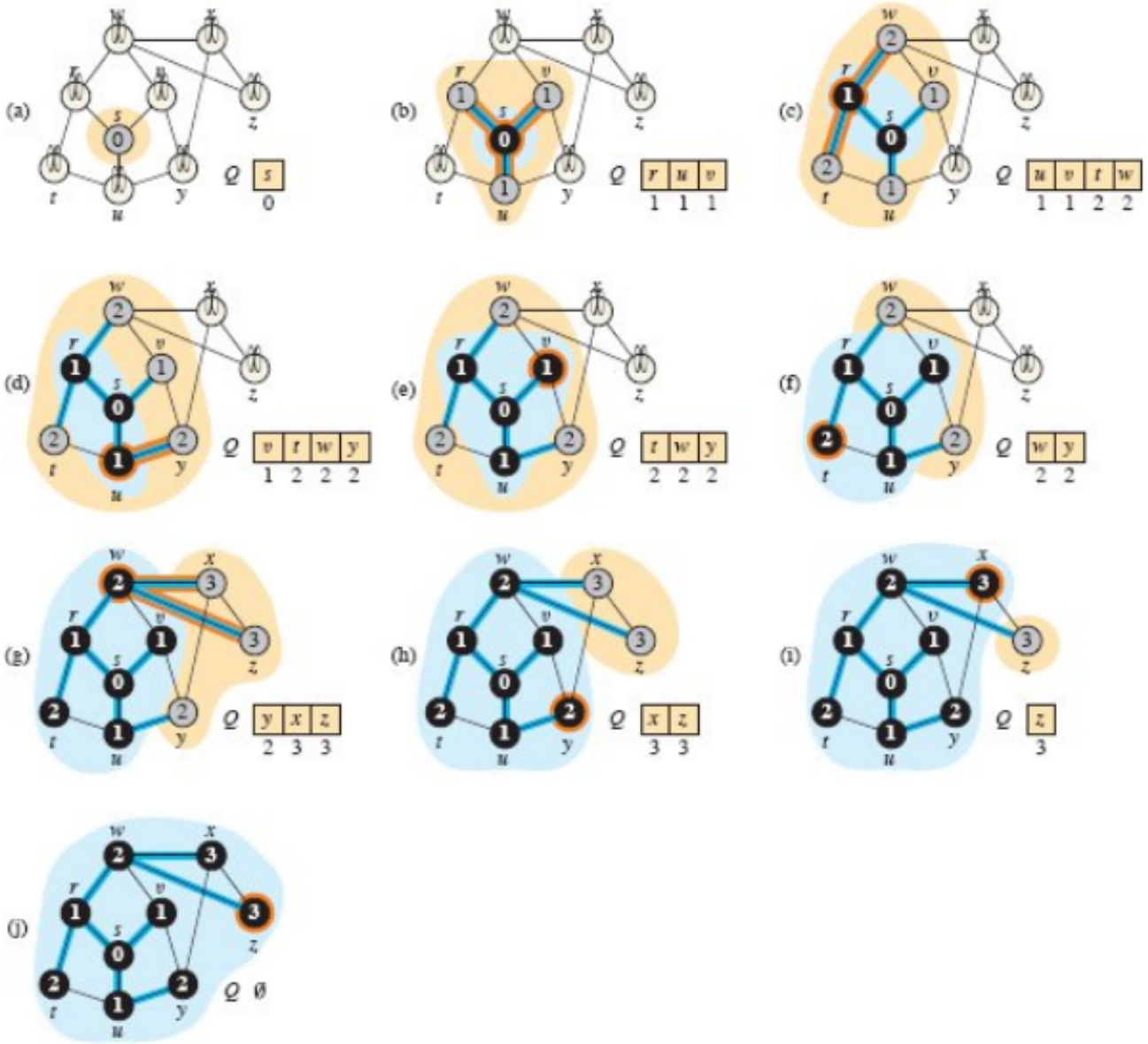

Example of breadth first search steps

Analysis of Search

Search on graph: $\mathcal{G} = (V, E)$,

- Each edge uv in the component traversed twice $\implies 2E + 1$
- Search in sparse! Adjacency matrix $\mathcal{O}(V)$, $\mathcal{O}(V^2)$ if not sparse!

Time complexity: $\mathcal{O}(V + E)$

Cliques

A **clique** is a subset of vertices in an undirected graph such that:

- Every two distinct vertices are **adjacent**
- The induced subgraph is **complete**

Examples:

3-clique (size 3)

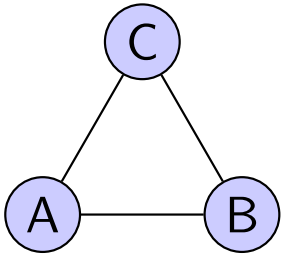

2-clique (size 2)

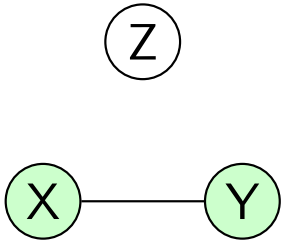

Note:

- Any single edge is a clique of size 2. The largest clique in a graph is the *maximum clique* (NP-hard to compute).
- Bron-Kerbosch algorithm for finding maximum clique

Minimum Spanning Tree (MST)

A **spanning tree** of a connected, undirected graph $G = (V, E)$ is:

- A subgraph that is a **tree**
- Includes **all vertices** ($|V|$ nodes)
- Has exactly $|V| - 1$ edges (no cycles)

A **minimum spanning tree** (MST) is a spanning tree with the **smallest possible total edge weight**.

Example:

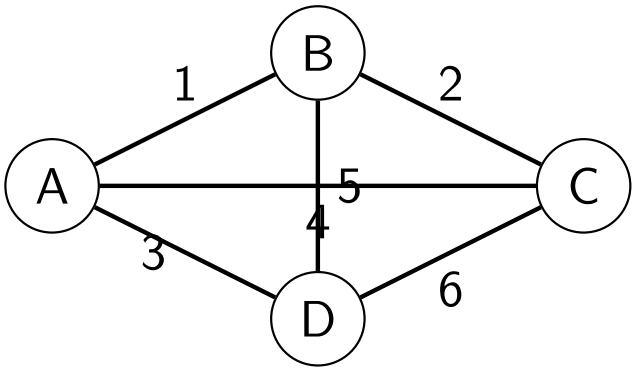

Original graph

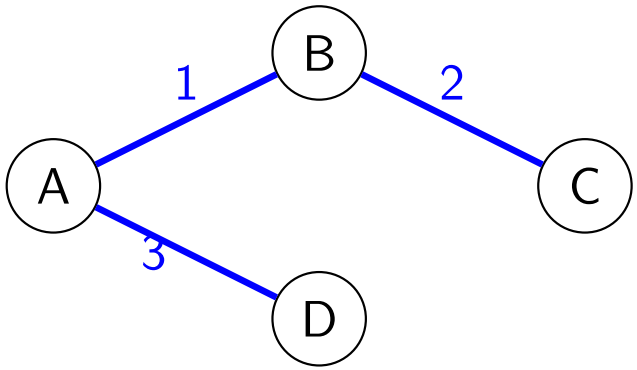

MST (total weight = 6)

Used in network design, clustering, and approximation algorithms.

Shortest Path

total weight = 10

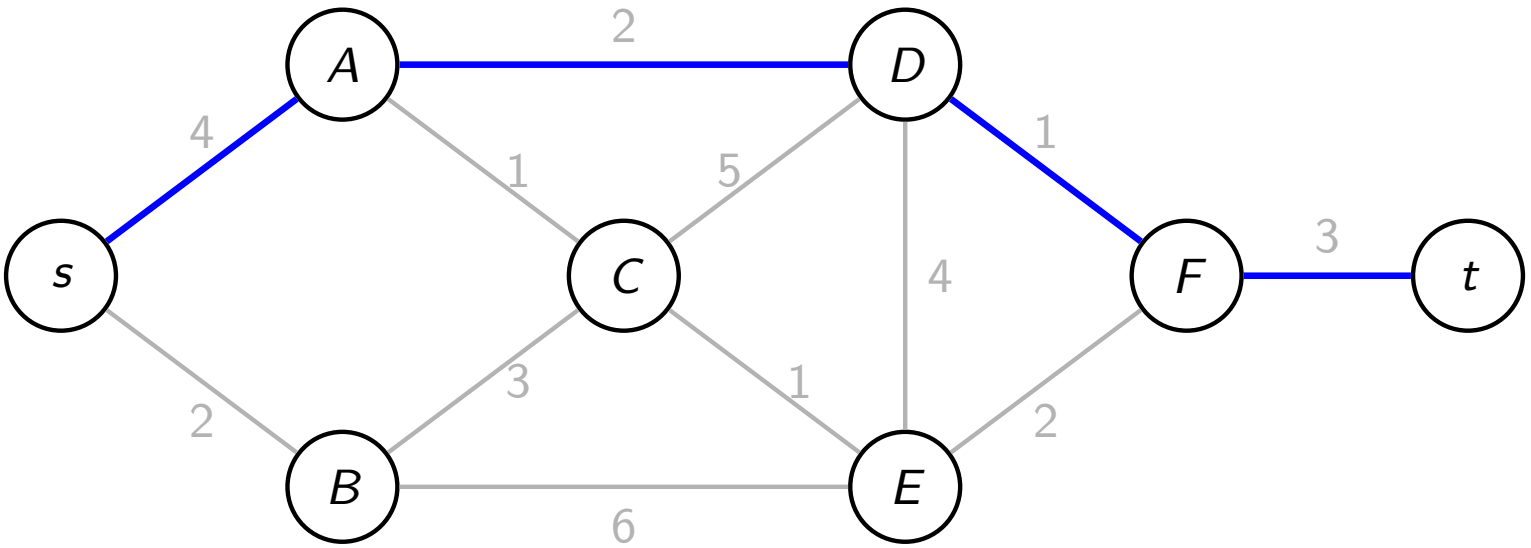

The **shortest path** from s to t minimizes the sum of edge weights.

Graph Coloring

A **proper coloring** assigns colors to vertices so that **no two adjacent vertices share the same color**.

Valid 3-coloring

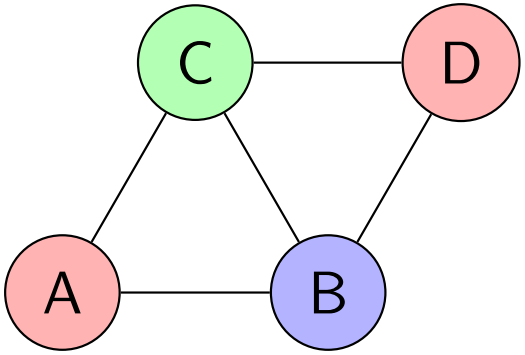

Invalid coloring

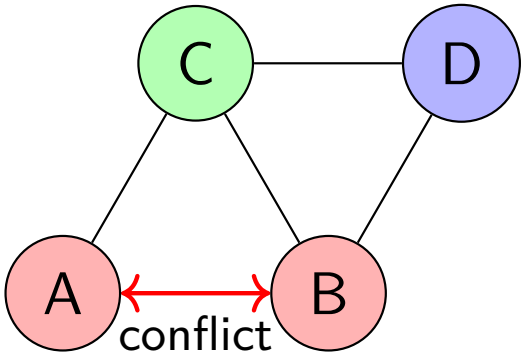

The smallest number of colors needed is the **chromatic number**.

Planar Graphs

A graph is **planar** if it can be drawn in the plane **without edge crossings** (except at vertices).

Planar graph

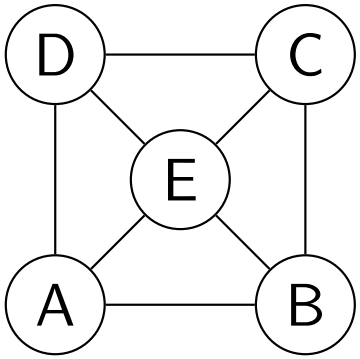

Drawing without crossings $\rightarrow$ planar.

Non-planar graph

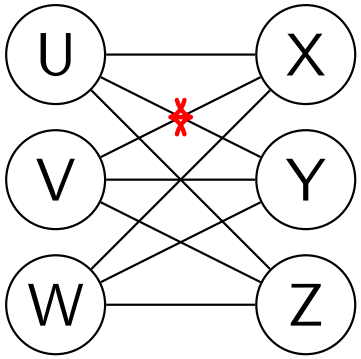

$K_{3,3}$ (complete bipartite) is non-planar.

Strongly Connected Components (SCCs)

Definition: In a directed graph $G = (V, E)$, a strongly connected component is a maximal subset $C \subseteq V$ such that for every pair $u, v \in C$, there is a directed path from u to v **and** from v to u}.

Key ideas:

- Every vertex belongs to exactly one SCC.
- SCCs partition the vertex set.
- The *condensation* of G (contracting each SCC to a node) is a DAG.

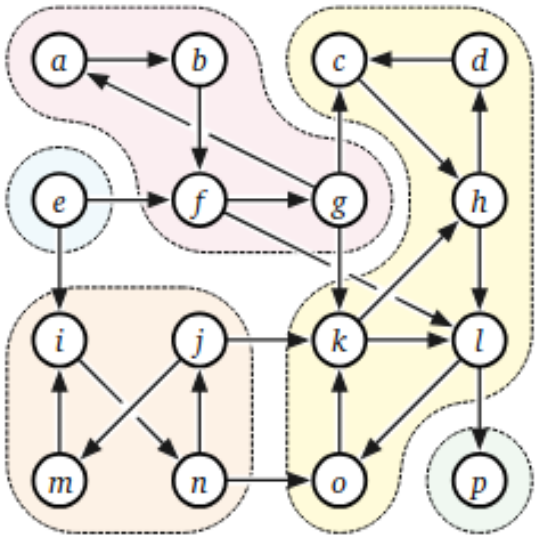

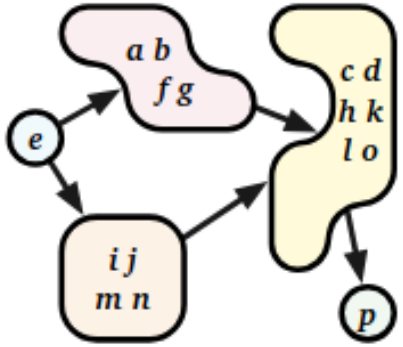

Algorithms: Kosaraju's, Tarjan's, or Gabow's $O(|V| + |E|)$.

Graph Transformations

Original Graph

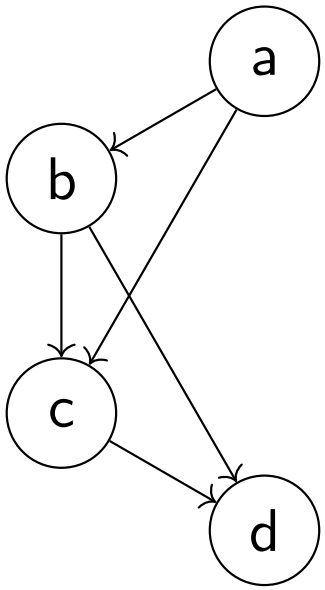

Transpose Graph
(Edges reversed)

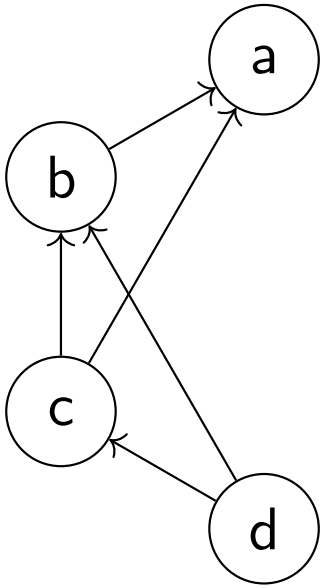

Dual Graph
(Faces become vertices)

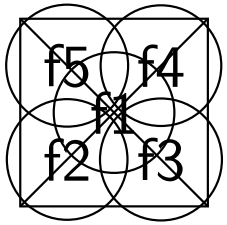

Inverse Graph: If $(u, v) \in E$, then $(u, v) \notin E_{inv}$ (complement)