Working with Messy Data

EES 4891-06/5891-01

Bayesian Statistical Methods

Jonathan Magnolia Gilligan

Class #21: Wednesday April 1, 2026

Working with Uncertain Data

Uncertain Data

- Divorce-rate data has uncertainties
  - Uncertainties in marriage and divorce rates are different in different states
  - States with larger populations have larger samples

```
library(rethinking)
data(WaffleDivorce)
d <- WaffleDivorce

p1 <- ggplot(d, aes(x = MedianAgeMarriage, y = Divorce,
              ymin = Divorce - Divorce.SE,
              ymax = Divorce + Divorce.SE)) +
  geom_pointrange(shape = 1, color = "slateblue") +
  labs(x = "Median age at marriage", y = "Divorce rate")
p2 <- ggplot(d, aes(x = Population, y = Divorce,
              ymin = Divorce - Divorce.SE,
              ymax = Divorce + Divorce.SE)) +
  geom_pointrange(shape = 1, color = "slateblue") +
  scale_x_log10() +
  labs(x = "Population", y = "Divorce rate")

p1 / p2
```

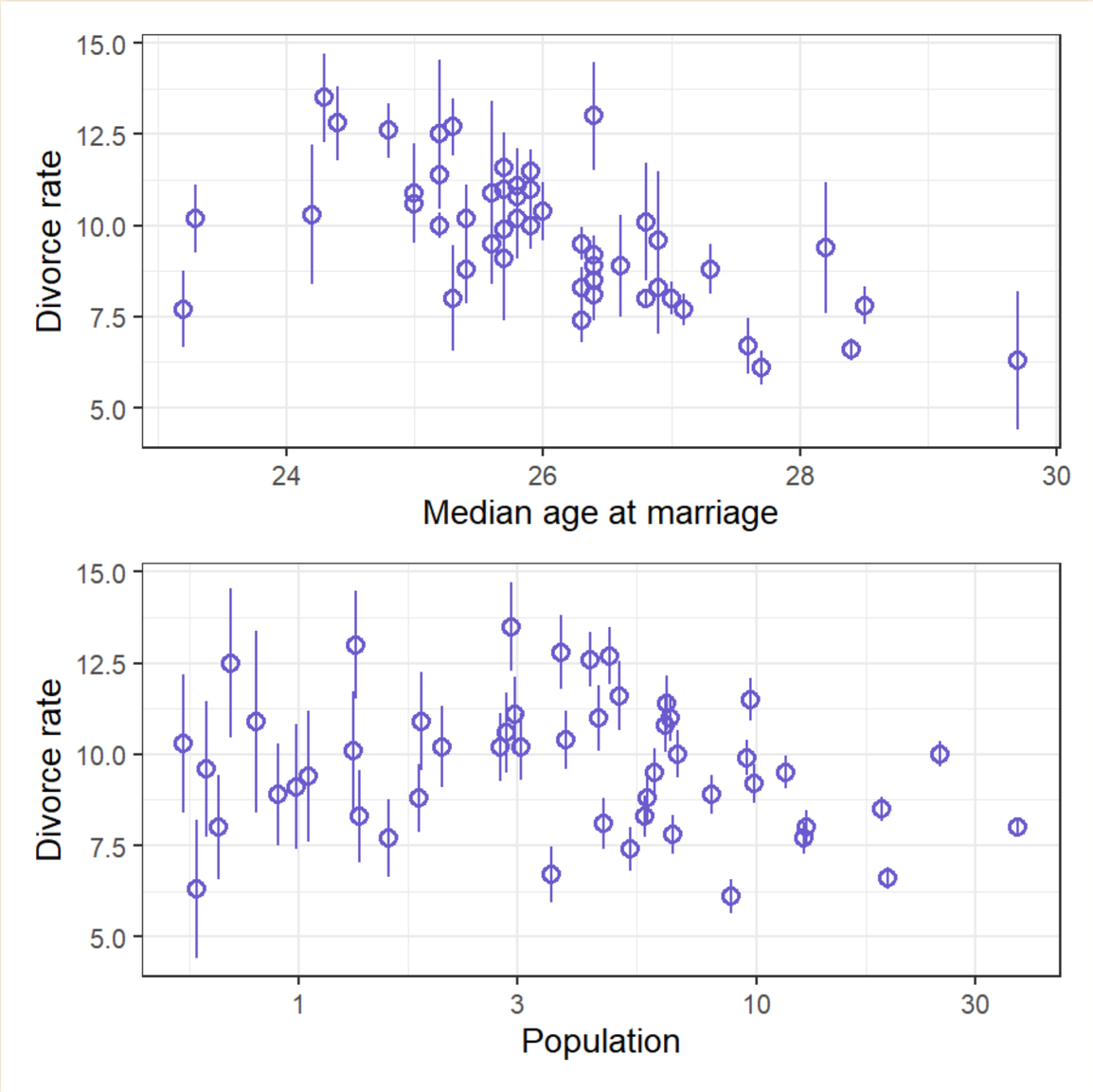

Modeling Uncertain Data

- **Generative thinking:**
  - Bayesian models simulate the processes that produce the data.
  - This can include the processes that create uncertainty in measurements.
- Modeling uncertainty

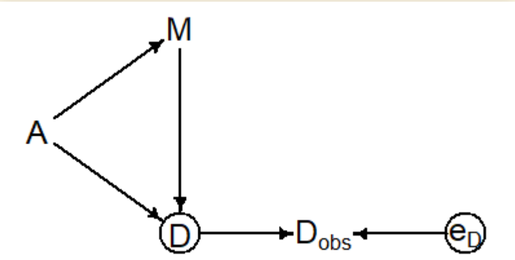

$$D_{\text{obs}} \sim \text{Normal}(D_{\text{True}}, \sigma_D)$$
$$D_{\text{True}} \sim \text{Normal}(\mu, \sigma)$$
$$\mu = \alpha + \beta_A A + \beta_M M$$

```
d_std <-  d |> transmute(
  D_obs = standardize(Divorce),
  D_sd = Divorce.SE / sd(Divorce),
  M = standardize(Marriage),
  A = standardize(MedianAgeMarriage),
  state = ordered(Loc)
) |> arrange(state)

mdl_divorce <- ulam(
  alist(
    D_obs ~ dnorm(D_true, D_sd),
    D_true[state] ~ dnorm(mu, sigma),
    mu <- a + bA * A + bM * M,
    a ~ dnorm(0, 0.2),
    bA ~ dnorm(0, 0.5),
    bM ~ dnorm(0, 0.5),
    sigma ~ dexp(1)
  ), data = d_std, chains = 4, cores = 4)

precis(mdl_divorce, digits=2, depth=2)
```

```
##           mean   sd  5.5% 94.5% rhat ess_bulk
## D_true[1] 0.70 0.57 -0.19  1.59    1     1944
## D_true[2] 1.16 0.37  0.59  1.76    1     2125
## D_true[3] 1.41 0.46  0.67  2.12    1     2816
```

```
## ...
```

```
##             mean   sd  5.5% 94.5% rhat ess_bulk
## D_true[49]  0.58 0.48 -0.19  1.35    1     2739
## D_true[50]  0.87 0.59 -0.06  1.76    1     1606
## a          -0.05 0.09 -0.20  0.10    1     1806
## bA         -0.62 0.16 -0.88 -0.36    1     1095
## bM          0.06 0.17 -0.21  0.32    1      888
## sigma       0.58 0.11  0.42  0.76    1      667
```

Shrinkage

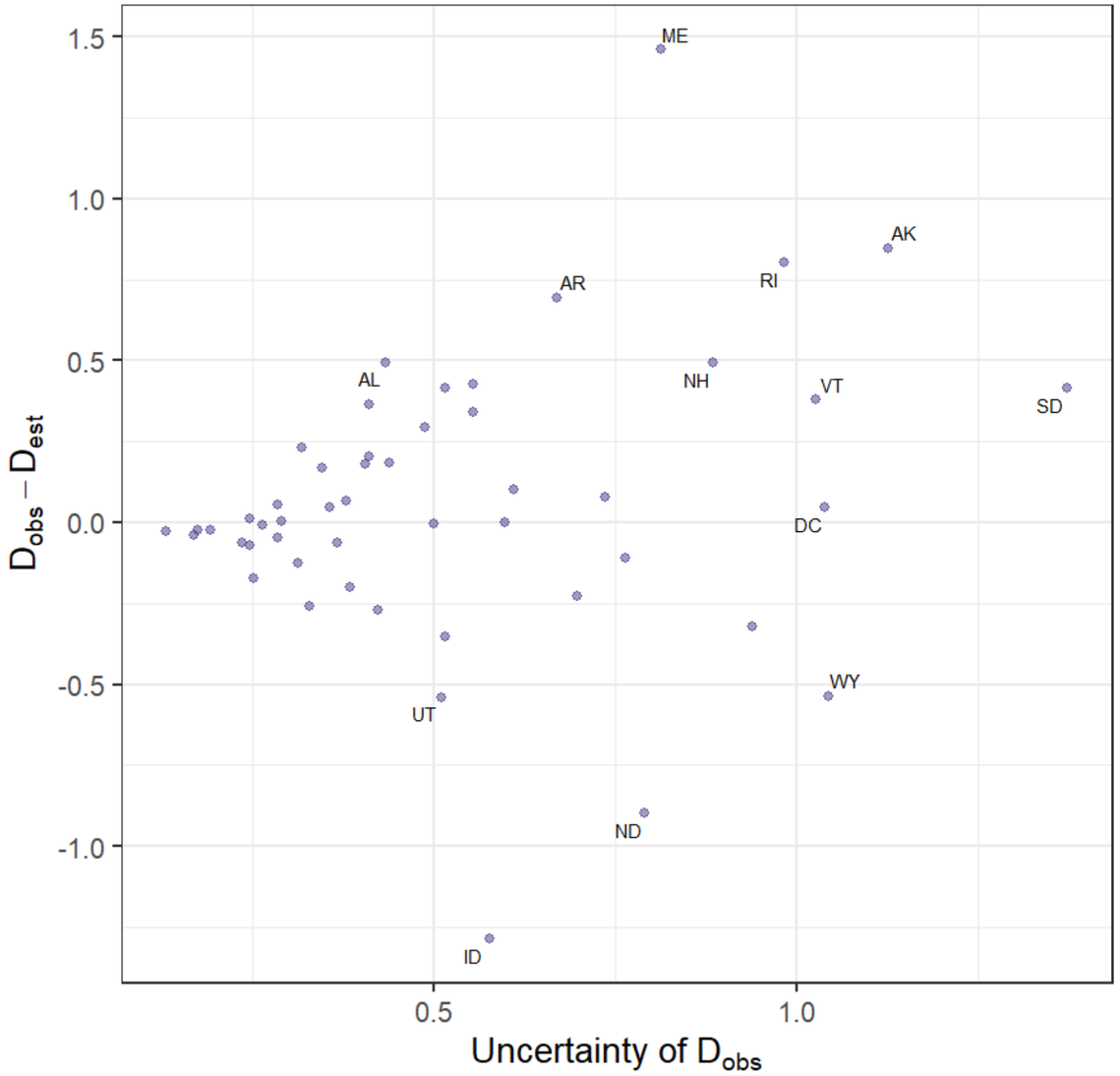
1.5
1.0
0.5
0.0
-0.5
-1.0
0.5
1.0
$D_{obs} - D_{est}$
Uncertainty of D_{obs}
ME
AK
AR
RI
AL
NH
VT
SD
DC
WY
UT
ND
ID

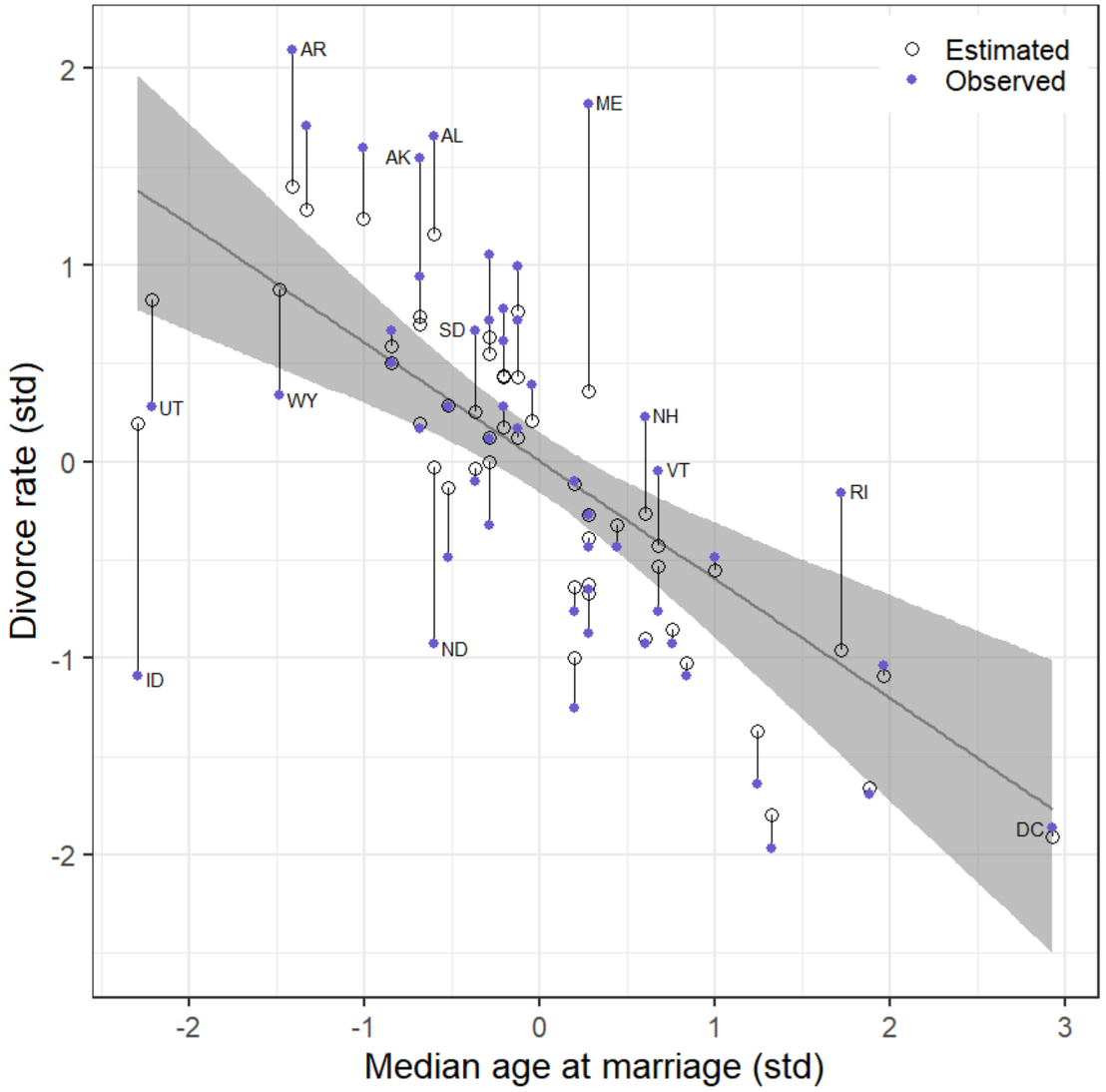
Estimated
Observed
2
1
0
-1
-2
-2
-1
0
1
2
3
Divorce rate (std)
Median age at marriage (std)
AR
ME
AL
AK
SD
UT
WY
NH
VT
RI
ND
ID
DC

Uncertainty in Predictor and Outcome

Uncertainty in Predictor and Outcome

- There is also uncertainty in the marriage rate
  - New DAG:

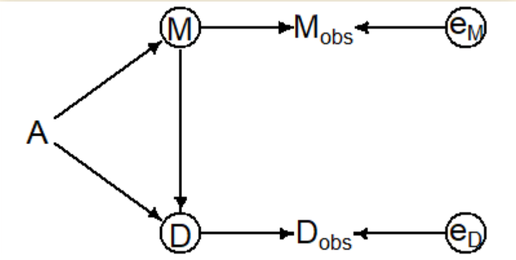

$$
\begin{aligned}
D_{\text{obs}} &\sim \text{Normal}(D_{\text{True}}, \sigma_D) \\
D_{\text{True}} &\sim \text{Normal}(\mu, \sigma) \\
\mu &= \alpha + \beta_A A + \beta_M M_{\text{True}} \\
M_{\text{obs}} &\sim \text{Normal}(M_{\text{True}}, \sigma_M) \\
M_{\text{True}} &\sim \text{Normal}(0, 1)
\end{aligned}
$$

```
d_std_2 <- d |> transmute(
    D_obs = standardize(Divorce),
    sigma_D = Divorce.SE / sd(Divorce),
    M_obs = standardize(Marriage),
    sigma_M = Marriage.SE / sd(Marriage),
    A = standardize(MedianAgeMarriage),
    state = factor(Loc)
) |> arrange(state)

mdl_divorce_2 <- ulam(
  alist(
    D_obs ~ dnorm(D_true[state], sigma_D),
    D_true[state] ~ dnorm(mu, sigma),
    mu <- a + bA * A + bM * M_true[state],
    M_obs ~ dnorm(M_true[state], sigma_M),
    M_true[state] ~ dnorm(0, 1),
    a ~ dnorm(0, 0.2),
    bA ~ dnorm(0, 0.5),
    bM ~ dnorm(0, 0.5),
    sigma ~ dexp(1)
  ), data = d_std_2, chains = 4, cores = 4)

precis(mdl_divorce_2, digits=2)
```

```
##        mean   sd  5.5% 94.5% rhat ess_bulk
## a     -0.04 0.09 -0.19  0.11 1.00  1541.87
## bA    -0.54 0.16 -0.80 -0.29 1.00  1198.11
## bM     0.20 0.21 -0.13  0.54 1.00   843.17
## sigma  0.56 0.10  0.40  0.72 1.01   673.68
```

Shrinkage in Two Variables

```
post <- spread_draws(mdl_divorce_2, D_true[i], M_true[i]) |>
  summarize(D_est = median(D_true), M_est = median(M_true)) |>
  left_join(mutate(d_std_2, i = as.integer(state)), by = "i")

ggplot(post, aes(x = M_obs, y = D_obs)) +
  geom_segment(aes(xend = M_est, yend = D_est),
               color = "black", size = 0.1) +
  geom_point(aes(x = M_est, y = D_est, color = "Estimated",
                 size = "Estimated", shape = "Estimated")) +
  geom_point(aes(color = "Observed", size = "Observed",
                 shape = "Observed")) +
  scale_color_manual(values = c(Observed = "slateblue",
                                Estimated = "black"), name = NULL)
        +
  scale_size_manual(values = c(Observed = 2,
                               Estimated = 3), name = NULL) +
  scale_shape_manual(values = c(Observed = 16,
                                Estimated = 1), name = NULL) +
  labs(x = "Marriage Rate (std)", y = "Divorce rate (std)") +
  theme(legend.position = "inside",
        legend.position.inside = c(0.99, 0.99),
          legend.justification = c(1, 1))
```

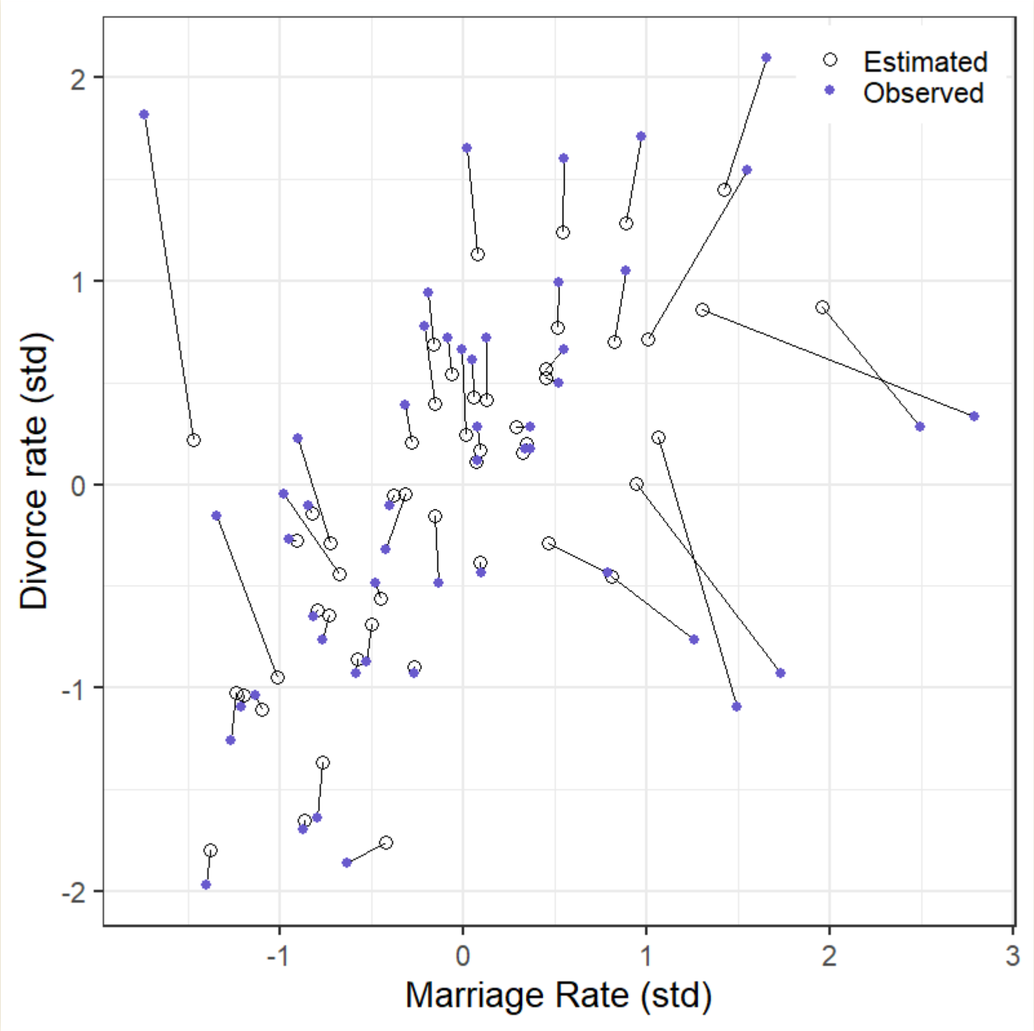

Complications

- These analyses were simple because there were no complications to the DAGs, such as colliders
- Things get a lot more complicated if there are correlations in the errors,

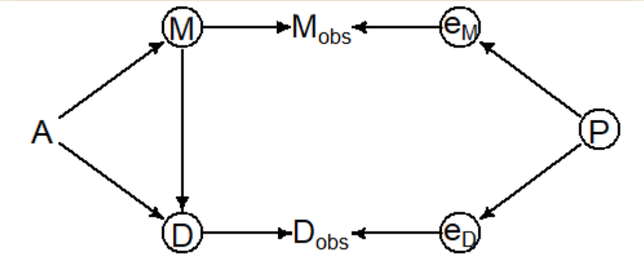

- or if the errors depend on the values of variables

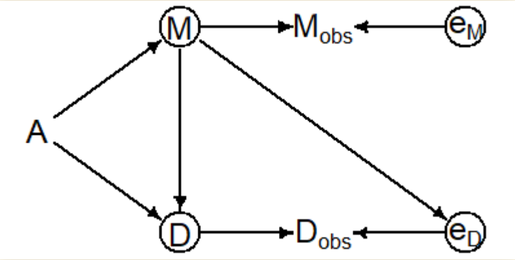

- Another problem arises if a non-causal variable has less error than a causal one:

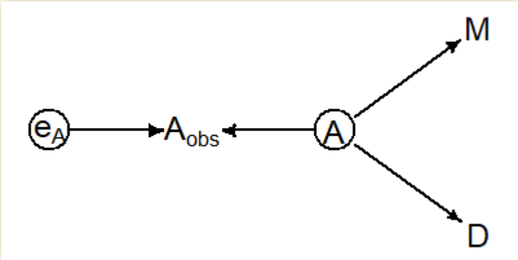

  - It will look like *M* is influencing *D* and *A* is not.

Missing Data

Real-world examples

- You're gathering data from a network of weather stations that record temperature, humidity, pressure, etc. every hour.
  - Sometimes, human error or equipment failure means that a station will miss some measurements.
- You're analyzing a stratigraphic column and there's an unconformity.

Analyzing Incomplete Data Sets

- What do you do if some measurements are missing?
  - Complete Case Analysis
    - Only analyze cases (rows in your data frame) where all the variables were measured
  - Imputation
    - Estimate the value of missing variables, and use the estimates in your analysis
- Complete case analysis:
  - At best, it's inefficient.
    - You're not using all the data you have)
  - At worst, it introduces bias into your analysis
- Kinds of missingness:
  1. **Missing completely at random (MCAR)**
     - Some measurements are missing for reasons that have nothing to do with what you're studying.
     - Missingness does not depend or correlate with any variables in your study
  2. **Missing at random (MAR)**
     a. Measurements of some variable are missing randomly, with a probability that depends on the value of a *predictor* variable that is not missing.
     b. Measurements are missing randomly, with a probability that depends on the value of an *unobserved* variable.
  3. **Missing not at random (MNAR)**
     - Missingness depends on the value of the missing variable.

Toy Examples: The Dog Eats the Homework

- We're investigating how the amount a student studies affects their homework grade
- Students have dogs
- Sometimes the dogs eat the students' homework before they can turn it in.
- Variables:
  - S is the amount of studying (standardized)
  - H is the homework score (0–10)
  - D is a dog: 0,1 indicates whether it ate the homework
  - H_{obs} is score for homework that's turned in, or `NA` if it's missing

1. Missing completely at random (MCAR):
   - The dog just randomly eats homework on some days.

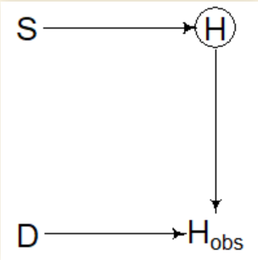

2. Missing at random (MAR)
   - The more a student studies, the less they play with the dog.
   - Bored dogs are more likely to eat homework

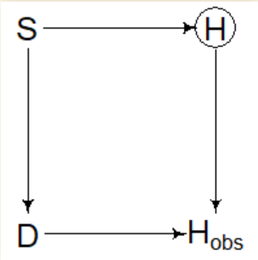

Examples: The Dog Eats the Homework

3. Missing at random (MAR):
   - Unobserved variable
   - Some days, it's noisy at home
   - The noise annoys the dog and it's more likely to eat homework
   - The noise also distracts the student and affects the quality of the homework

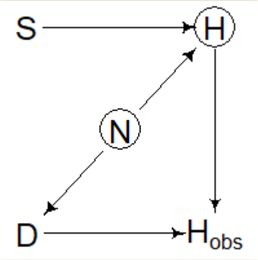

4. Missing not at random (MNAR)
   - Dogs prefer to eat homework with low scores
     - Details:
       1. When a student doesn't know how to do a homework exercise, they get angry.
       2. When the student gets angry, the dog gets upset.
       3. Upset dogs are more likely to eat homework.

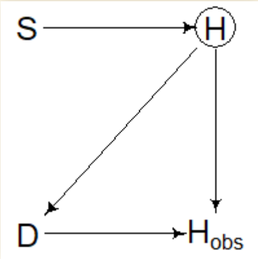

Case-Study: Primates

Primates

- Predict nutritional content of milk in different primate species from the species' average body mass and the size of the neocortex as a percentage of total brain mass.
- In Chapter 5, we discovered that the brain measurements were missing for many species

```
data(milk)
d <- milk
kable(head(d, 10))
```

clade	species	kcal.per.g	perc.fat	perc.protein	perc.lactose	mass	neocortex.perc
Strepsirrhine	Eulemur fulvus	0.49	16.60	15.42	67.98	1.95	55.16
Strepsirrhine	E macaco	0.51	19.27	16.91	63.82	2.09	NA
Strepsirrhine	E mongoz	0.46	14.11	16.85	69.04	2.51	NA
Strepsirrhine	E rubriventer	0.48	14.91	13.18	71.91	1.62	NA
Strepsirrhine	Lemur catta	0.60	27.28	19.50	53.22	2.19	NA
New World Monkey	Alouatta seniculus	0.47	21.22	23.58	55.20	5.25	64.54
New World Monkey	A palliata	0.56	29.66	23.46	46.88	5.37	64.54
New World Monkey	Cebus apella	0.89	53.41	15.80	30.79	2.51	67.64
New World Monkey	Saimiri boliviensis	0.91	46.08	23.34	30.58	0.71	NA
New World Monkey	S sciureus	0.92	50.58	22.33	27.09	0.68	68.85

Statistical models

- Basic model (Chapter 5)

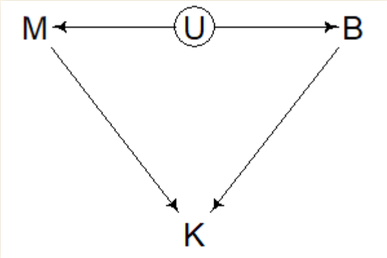

- Now model the process that causes brain data to be missing.

1. Completely at random

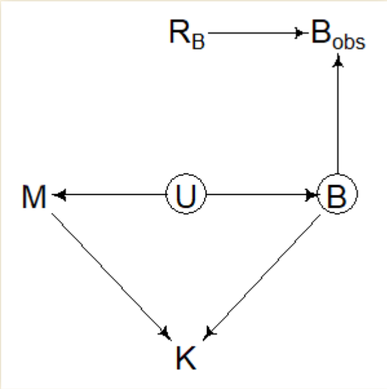

2. At random

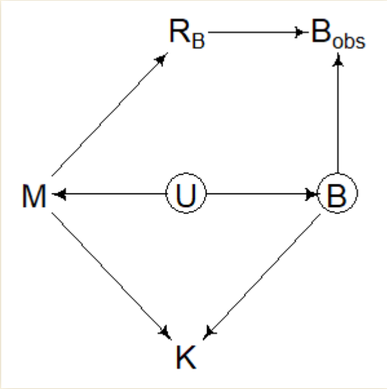

3. Not at random

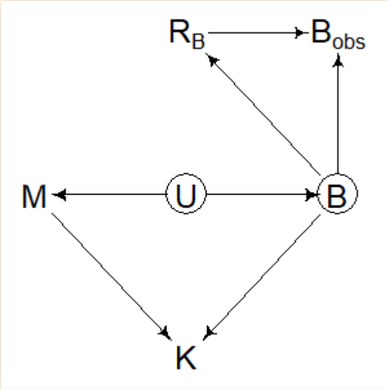

Working with Missing Data

- Missing completely at random (MCAR):
  - No bias from using complete cases,
    - but we lose good data from variables that were measured
- Missing at random (MAR):
  - There is potential bias from a non-causal path

$$B_{\text{obs}} \leftarrow R_B \leftarrow M \rightarrow K$$

    but conditioning on M closes this backdoor.
  - Our model conditions on M anyway, so we can use complete cases,
    - but we lose data if we do so.
- Missing not at random (MNAR):
  - Missingness depends on brain size.
  - This could happen because scientists are more interested in species with large brains.
  - This would create a backdoor (non-causal path) through R_B that will be impossible to test for or solve with conditioning.

Imputation

Imputation

- Use Bayesian methods to *impute* values for missing measurements
- Each missing value becomes a *parameter* in our model.
  - Start with a prior
  - Relate good measurements to missing ones
  - We end up with a posterior probability distribution for each missing value

$$
\begin{aligned}
K &\sim \text{Normal}(\mu, \sigma) \\
\mu &\sim \alpha + \beta_B\, B + \beta_M\, \log M \\
B &\sim \text{Normal}(\nu, \sigma_B) \\
\alpha &\sim \text{Normal}(0, 0.5) \\
\beta_B &\sim \text{Normal}(0, 0.5) \\
\beta_M &\sim \text{Normal}(0, 0.5) \\
\sigma &\sim \text{Exponential}(1) \\
\nu &\sim \text{Normal}(0.5, 1) \\
\sigma_B &\sim \text{Exponential}(1)
\end{aligned}
$$

Turning our model into code

$$
\begin{aligned}
K &\sim \text{Normal}(\mu, \sigma) \\
\mu &\sim \alpha + \beta_B B + \beta_M \log M \\
B &\sim \text{Normal}(\nu, \sigma_B) \\
\alpha &\sim \text{Normal}(0, 0.5) \\
\beta_B &\sim \text{Normal}(0, 0.5) \\
\beta_M &\sim \text{Normal}(0, 0.5) \\
\sigma &\sim \text{Exponential}(1) \\
\nu &\sim \text{Normal}(0.5, 1) \\
\sigma_B &\sim \text{Exponential}(1)
\end{aligned}
$$

```
data(milk)
d <- milk
d$neocortex.prop <- d$neocortex.perc / 100
d$logmass <- log(d$mass)
dat_std <- d |> transmute(
    K = standardize(kcal.per.g),
    B = standardize(neocortex.prop),
    M = standardize(logmass))
```

```
mdl_milk_1 <- ulam(
    alist(
        K ~ dnorm(mu, sigma),
        mu <- a + bB * B + bM * M,
        B ~ dnorm(nu, sigma_B),
        c(a,nu) ~ dnorm(0, 0.5),
        c(bB,bM) ~ dnorm(0, 0.5),
        sigma_B ~ dexp(1),
        sigma ~ dexp(1)
    ), data = dat_std, chains = 4, cores = 4)
```

Model output

```
precis_show(precis(mdl_milk_1, digits = 2, depth = 2))
```

```
##                mean   sd  5.5% 94.5% rhat ess_bulk
## nu            -0.05 0.21 -0.38  0.28 1.00  2130.43
## a              0.03 0.17 -0.24  0.29 1.00  2483.55
## bM            -0.54 0.21 -0.87 -0.20 1.00  1200.23
## bB             0.49 0.24  0.09  0.87 1.01   771.17
## sigma_B        1.01 0.17  0.78  1.31 1.00  1590.97
## sigma          0.85 0.15  0.65  1.10 1.00  1354.98
## B_impute[1]   -0.56 0.96 -2.05  0.96 1.00  2355.85
## B_impute[2]   -0.68 0.91 -2.13  0.81 1.00  2097.72
## B_impute[3]   -0.70 1.01 -2.21  1.04 1.00  1824.52
## B_impute[4]   -0.26 0.88 -1.60  1.15 1.00  2676.55
## B_impute[5]    0.44 0.92 -1.05  1.84 1.00  2393.92
## B_impute[6]   -0.16 0.91 -1.61  1.33 1.00  2481.44
## B_impute[7]    0.18 0.87 -1.24  1.57 1.00  2296.45
## B_impute[8]    0.27 0.87 -1.12  1.63 1.00  2595.22
## B_impute[9]    0.53 0.96 -1.04  2.03 1.00  2487.53
## B_impute[10] -0.45 0.90 -1.87  1.06 1.00  2504.11
## B_impute[11] -0.30 0.91 -1.70  1.18 1.00  2973.83
## B_impute[12]  0.14 0.88 -1.29  1.55 1.00  2650.09
```

Examining the model

- Run the model again without the missing data (complete cases):

```
dat_std_obs <- dat_std |> filter(! is.na(B))
```

```
mdl_milk_2 <- ulam(
  mdl_milk_1,
  data = dat_std_obs, chains = 4, cores = 4)
```

```
precis_show(precis(mdl_milk_2, digits = 2, depth = 2))
```

```
##          mean   sd  5.5% 94.5% rhat ess_bulk
## nu       0.00 0.23 -0.38  0.35    1  1594.75
## a        0.11 0.19 -0.20  0.41    1  1768.16
## bM      -0.63 0.25 -0.99 -0.21    1  1298.76
## bB       0.59 0.29  0.11  1.03    1  1360.34
## sigma_B  1.04 0.18  0.79  1.36    1  1901.30
## sigma    0.88 0.19  0.63  1.19    1  1361.58
```

```
plot(coeftab(mdl_milk_1, mdl_milk_2), pars=c("bB", "bM"))
```

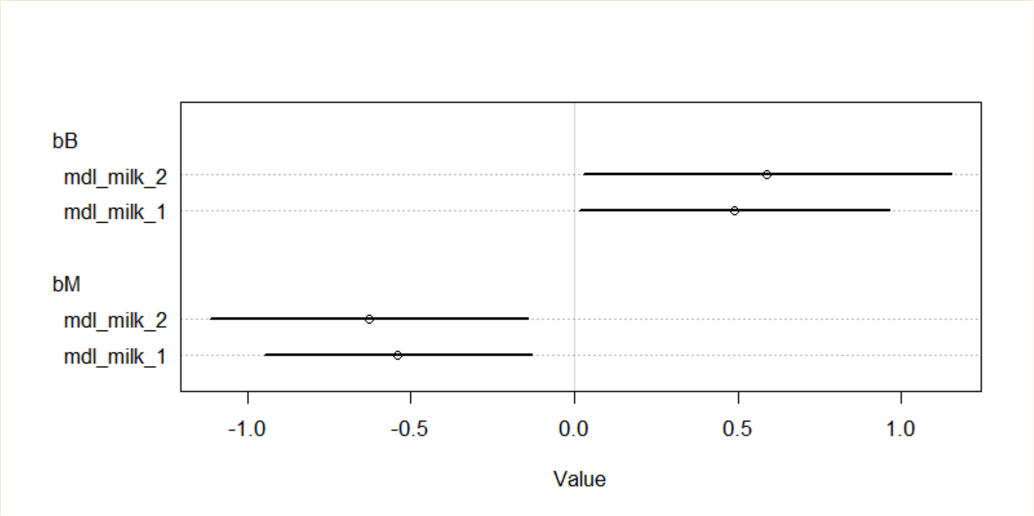

Examine the posterior

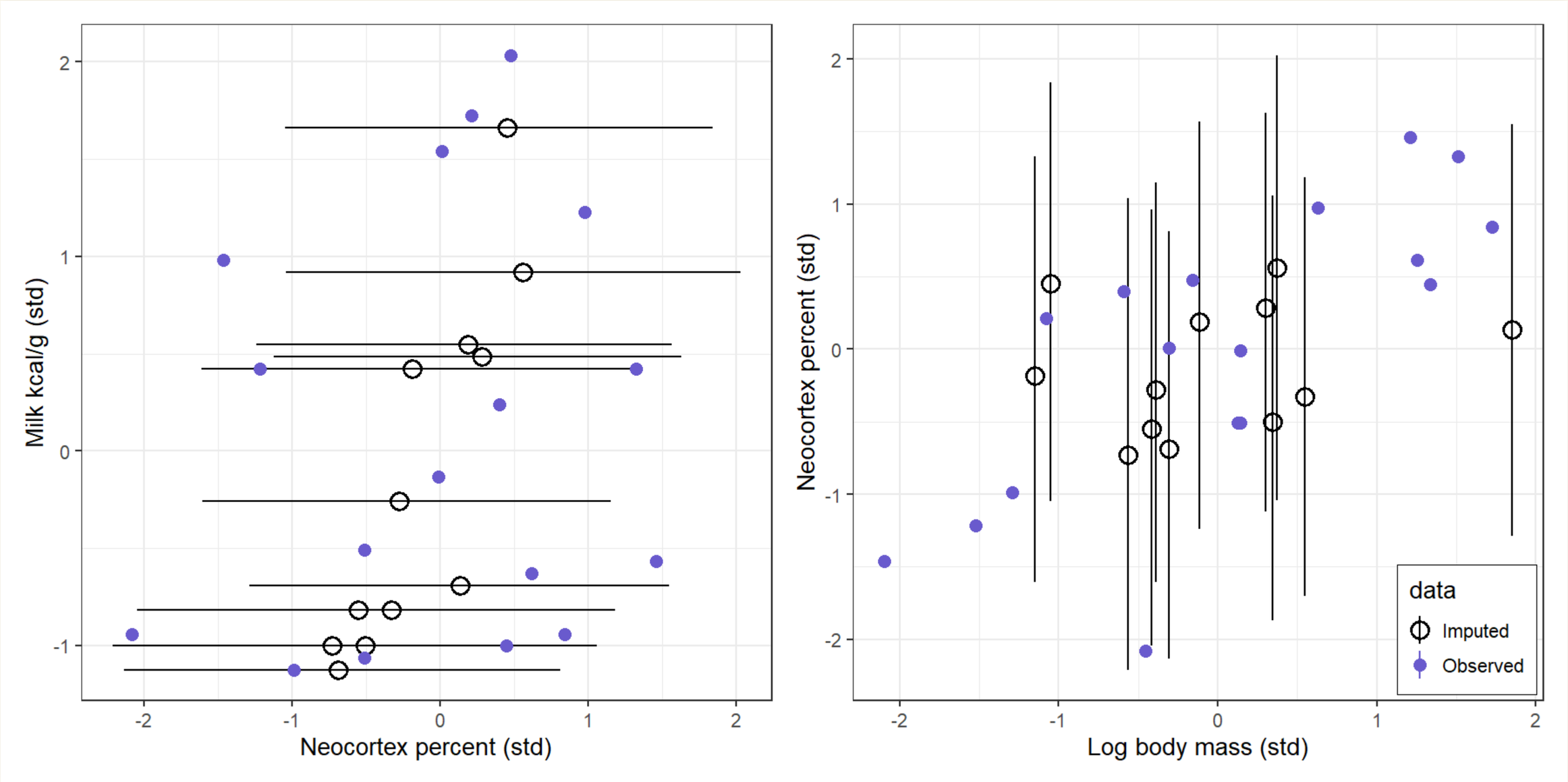

Improve the model

- In our model, B and M are related through U.

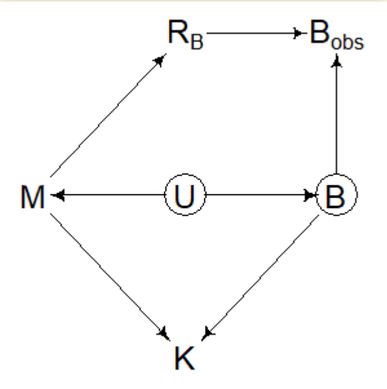

- Instead of our original imputation formula

$$B \sim \text{Normal}(\nu, \sigma_B),$$

use

$$(M, B) \sim \text{MVNormal}((\mu_M, \mu_B), S),$$

where S is a covariance matrix.

```
mdl_milk_3 <- ulam(
    alist(
       # K as function of B and M
        K ~ dnorm(mu, sigma),
        mu <- a + bB * B_merge + bM * M,

       # M and B correlation
        MB ~ multi_normal(c(muM, muB), Rho_BM, Sigma_BM),
        matrix[29,2]:MB <- append_col(M, B_merge),

       # define B_merge as mix of observed and imputed values
        vector[29]:B_merge <- merge_missing(B, B_impute),

       # priors
        c(a, muB, muM) ~ dnorm(0, 0.5),
        c(bB, bM) ~ dnorm(0, 0.5),
        sigma ~ dexp(1),
        Rho_BM ~ lkj_corr(2),
        Sigma_BM ~ dexp(1)
    ), data = dat_std, chains = 4, cores = 4)
```

```
precis_show(precis(mdl_milk_3, depth=3, pars=c("bM","bB","Rho_BM"
        )))
```

```
##                mean   sd  5.5% 94.5% rhat ess_bulk
## bM            -0.64 0.22 -0.99 -0.28    1  1271.29
## bB             0.59 0.25  0.18  0.97    1   946.04
## Rho_BM[1,1]    1.00 0.00  1.00  1.00   NA       NA
## Rho_BM[2,1]    0.61 0.13  0.36  0.79    1  1482.59
## Rho_BM[1,2]    0.61 0.13  0.36  0.79    1  1482.59
## Rho_BM[2,2]    1.00 0.00  1.00  1.00   NA       NA
```
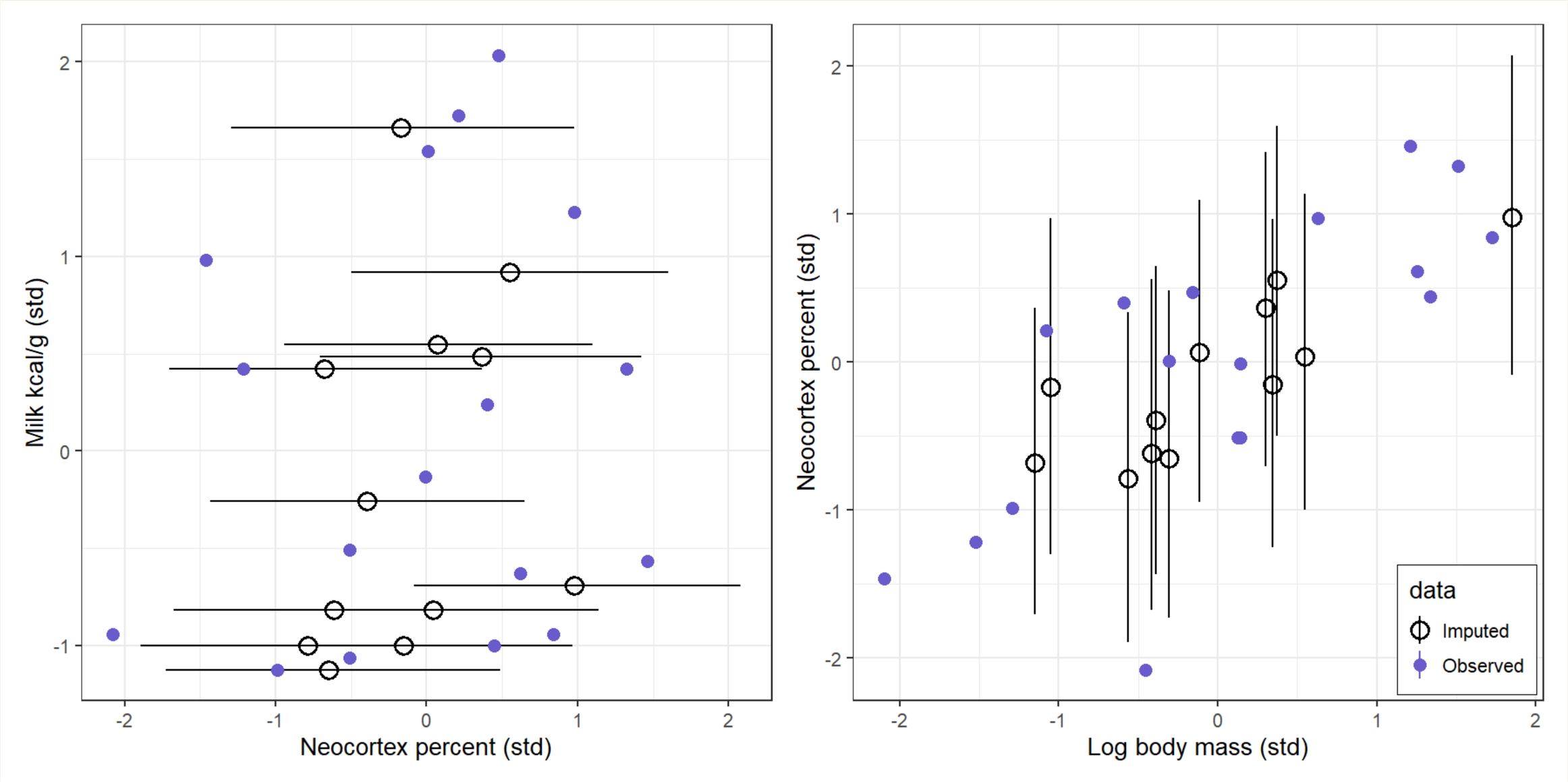
Examine the posterior