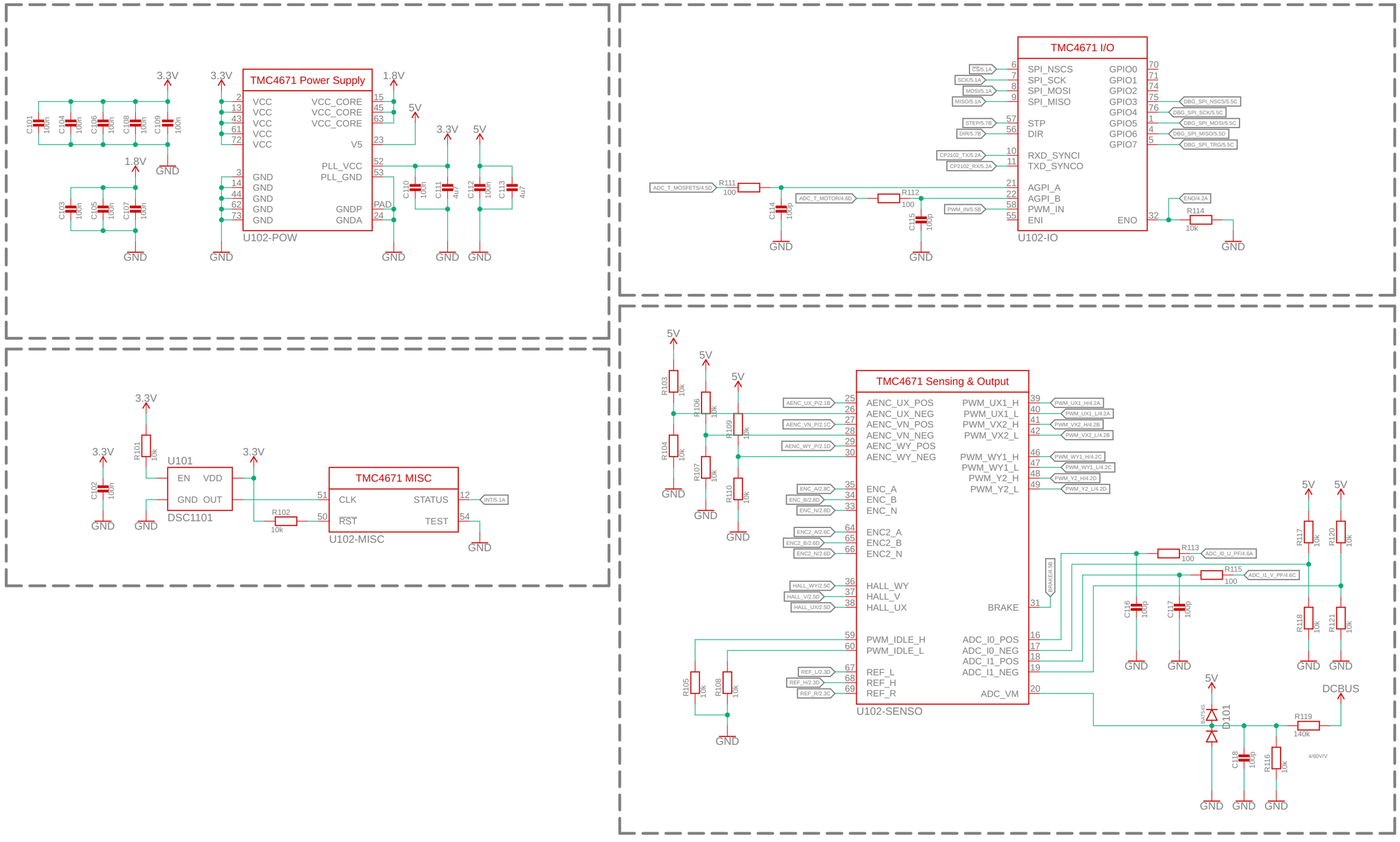

TITLE: Main Controller	
Design by: Rafael Silva	REV: v0a
Date: 11/04/19 11:04	Sheet: 1/5

Released under the Creative Commons
Attribution-ShareAlike 4.0 License
https://creativecommons.org/licenses/by-sa/4.0/

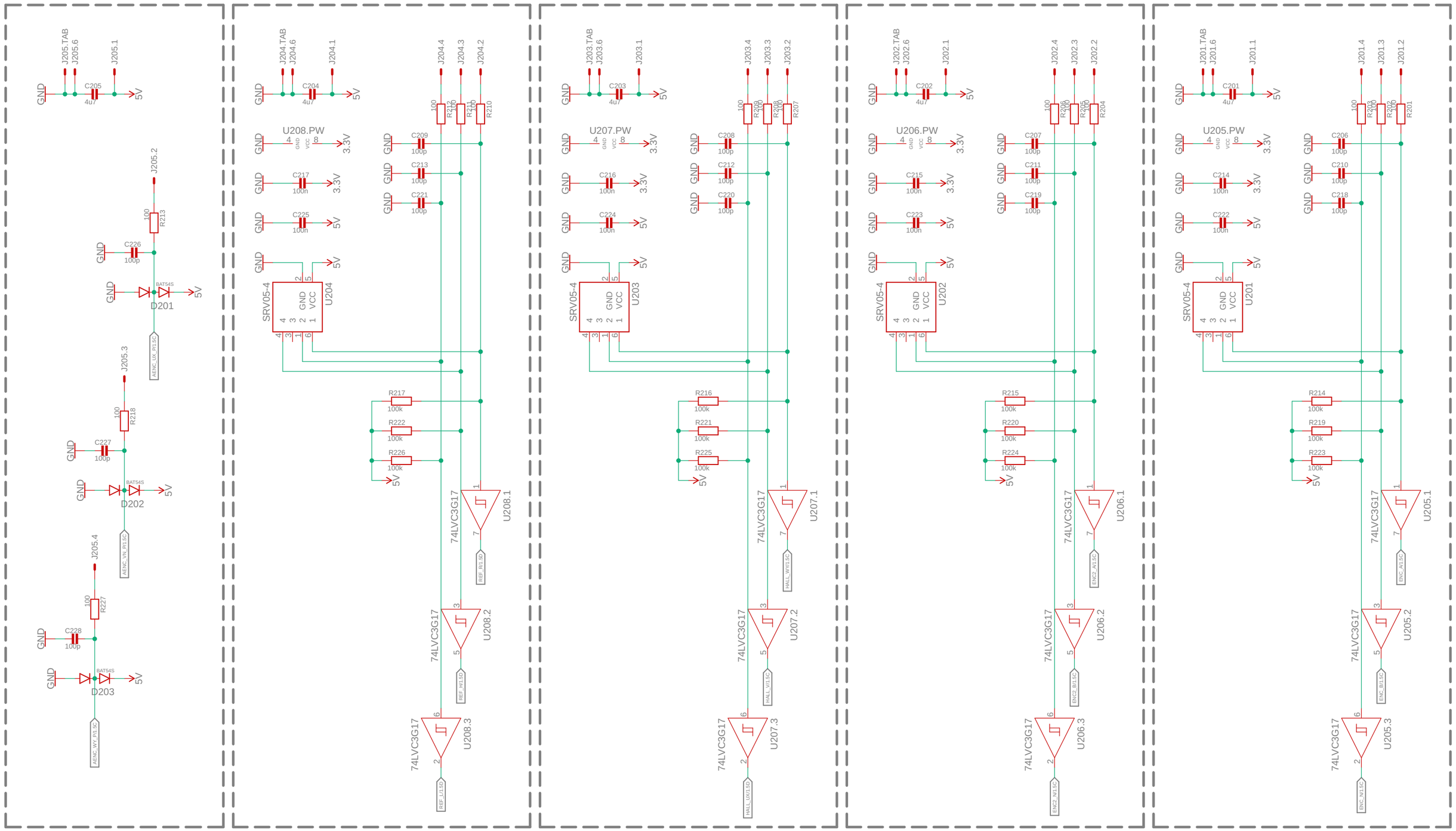

TITLE: Feedback

Design by: Rafael Silva

REV: v0a

Date: 11/04/19 11:04

Sheet: 2/5

Released under the Creative Commons
Attribution-ShareAlike 4.0 License
https://creativecommons.org/licenses/by-sa/4.0/

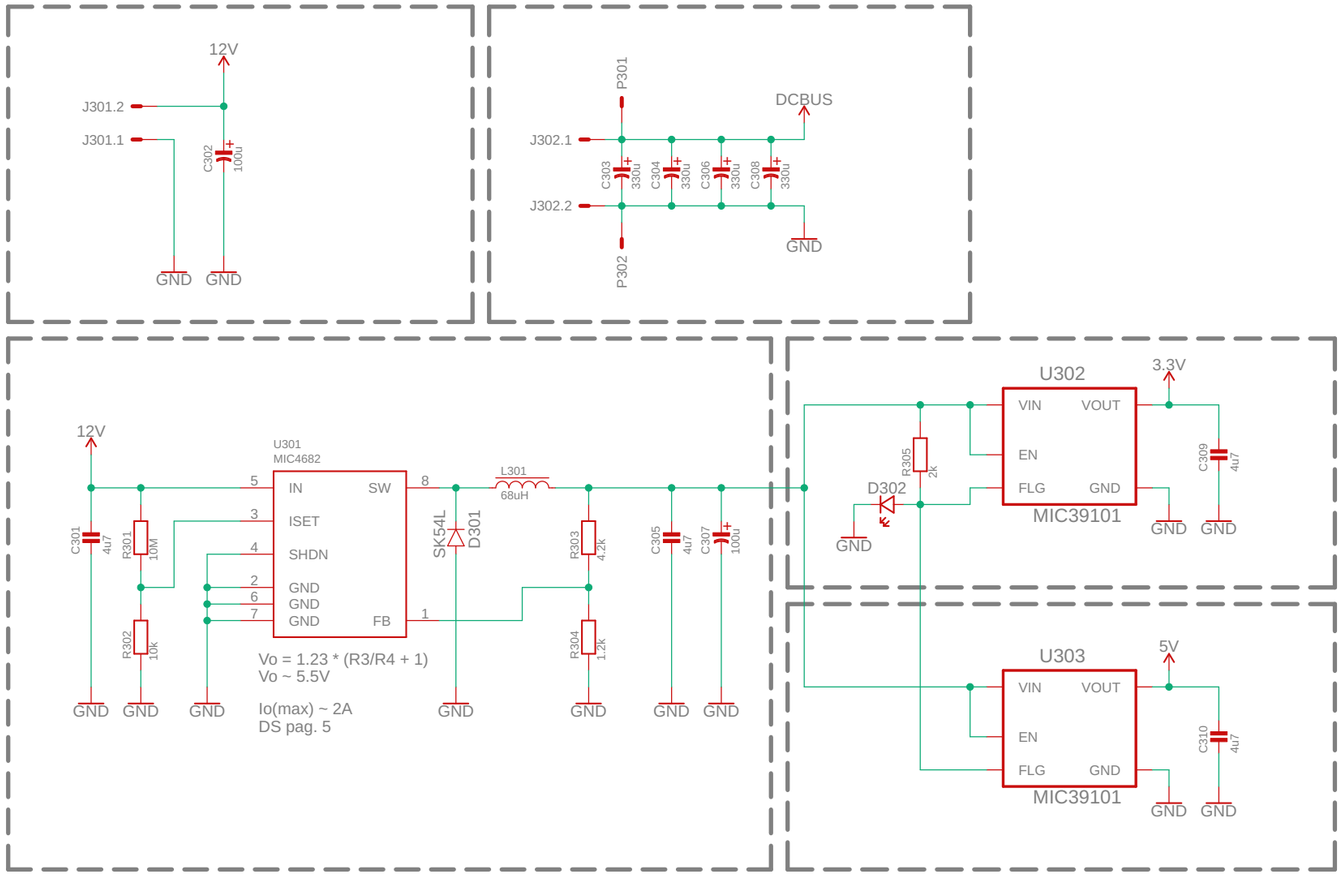

TITLE: Power Management

Design by: Rafael Silva

REV: v0a

Date: 11/04/19 11:04

Sheet: 3/5

Released under the Creative Commons
Attribution-ShareAlike 4.0 License
https://creativecommons.org/licenses/by-sa/4.0/

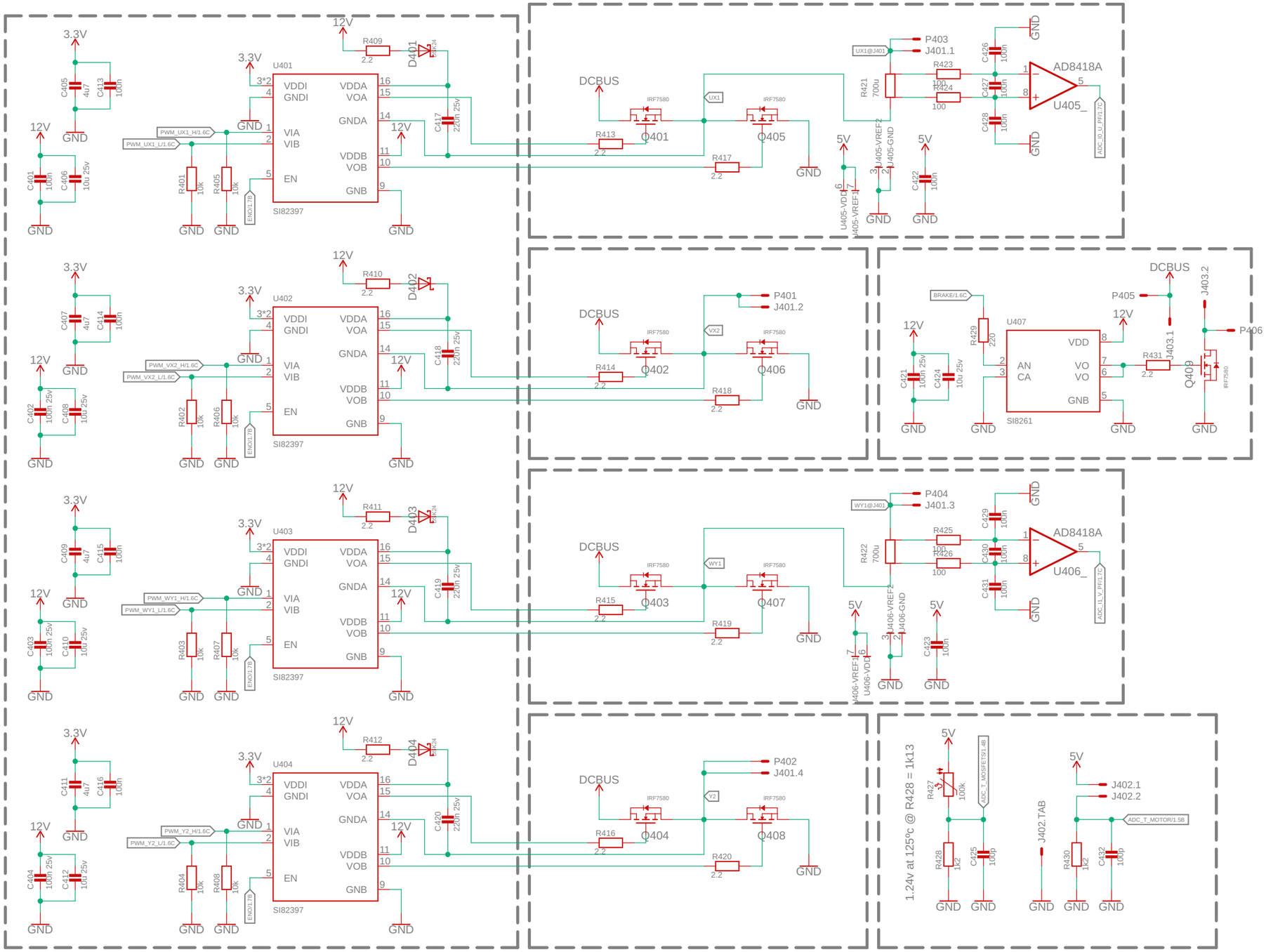

TITLE: Power Stage

Design by: Rafael Silva

REV: v0a

Date: 11/04/19 11:04

Sheet: 4/5

Released under the Creative Commons
Attribution-ShareAlike 4.0 License
https://creativecommons.org/licenses/by-sa/4.0/

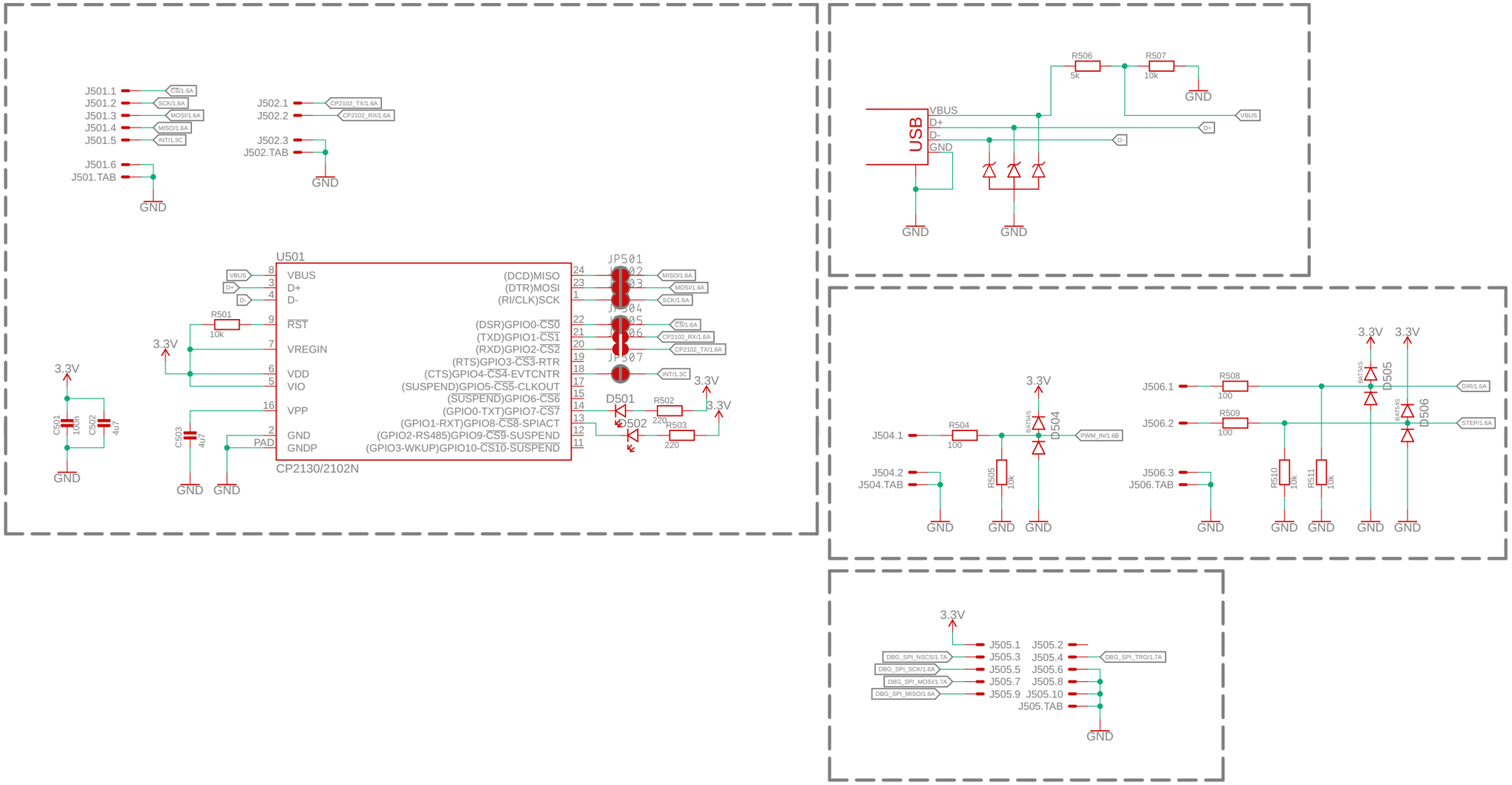

TITLE: Interface	
Design by: Rafael Silva	REV: v0a
Date: 11/04/19 11:04	Sheet: 5/5

Released under the Creative Commons
Attribution-ShareAlike 4.0 License
https://creativecommons.org/licenses/by-sa/4.0/