Available online at www.sciencedirect.com
SCIENCE DIRECT®
Journal of Sound and Vibration 285 (2005) 467–476
JOURNAL OF SOUND AND VIBRATION
www.elsevier.com/locate/jsvi

Short Communication

Vibrations of elastically restrained frames

Carlos Marcelo Albarracín, Ricardo Oscar Grossi*,[1]

ICMASA, Facultad de Ingeniería, Universidad Nacional de Salta. Avenida Bolivia 5150, 4400 Salta. República Argentina

Received 27 May 2004; received in revised form 16 September 2004; accepted 23 September 2004
Available online 16 December 2004

Abstract

This paper deals with the determination of eigenfrequencies of a frame which consists of a beam supported by a column and is submitted to intermediate elastic constraints. The ends of the frame are elastically restrained against rotation and translation. The individual members of the frame are assumed to be governed by the transverse and axial vibration theory of an Euler–Bernoulli beam.

The boundary and eigenvalue problem which governs the dynamical behavior of the frame structure is derived using the techniques of calculus of variations. Exact values of eigenfrequencies are determined by the application of the separation of variables method. Also, results are obtained by the use of the finite element method. The natural frequencies and mode shapes are presented for a wide range of values of the restraint parameters. Several particular cases are presented and some of these have been compared with those available in the literature.
© 2004 Elsevier Ltd. All rights reserved.

1. Introduction

The problem of vibrating frame structures is of importance in several fields of engineering, i.e. bridges design, structural analysis of buildings and micro frames used in electronic equipment. Several investigators have studied the natural vibrations of frames. It is not the intention to review the literature consequently, some of the relevant papers will be cited. Early studies have been compiled by Blevins [1]. Filipich et al. [2] analyzed the first symmetric mode of vibration of a portal

*Corresponding author. Fax: +54 387 4255351.
E-mail address: grossiro@unsa.edu.ar (R.O. Grossi).
[1]Research member of CONICET, Argentina.

0022-460X/$ - see front matter © 2004 Elsevier Ltd. All rights reserved.
doi:10.1016/j.jsv.2004.09.013

frame. An approximate solution is obtained by means of a variational method. In the analysis presence of elastically restrained ends and variable cross-section members are considered. Laura et al. [3] dealt with the determination of the fundamental frequency of vibration in the case of antisymmetric modes of a frame elastically restrained against translation and rotation at the ends, carrying concentrated masses. The optimized Rayleigh–Ritz method is employed to obtain the eigenvalues and eigenfunctions. Filipich et al. [4] analyzed the in-plane vibrations of portal frames with end supports elastically restrained against rotation and translation. Lee and Ng [5] presented a formulation by the Rayleigh–Ritz method together with the introduction of artificial linear and torsional springs for computing the natural frequencies and modes for the in-plane vibrations of complex planar frame structures. Oguamanam et al. [6] analyzed a two-beam open frame structure with an arbitrary angle of inclination between the beams and with a payload at the free tip. Heppler et al. [7] extended the work presented in Ref. [6]. Lin and Ro [8] presented a hybrid analytical–numerical method for the dynamic analysis of planar serial-frame structures. Many excellent books also deal with vibrating frames [9–11]. In contrast to the body of information described, there is no information for frames elastically restrained at intermediate points.

The present paper is concerned with the general problem of free vibrations of a frame with intermediate constraints and ends elastically restrained against rotation and translation. The separation of variables method is applied for the determination of the exact eigenfrequencies and mode shapes. The eigenvalues are calculated numerically by applying the Newton method strategy to the corresponding frequency equation. Solutions are verified by the finite element method. The restrained frame analyzed includes the classical end conditions: clamped, simply supported, sliding and free as simple particular cases. Some of these particular cases are discussed.

A great number of problems were solved and since this number of cases is prohibitively large, results for the first five eigenfrequencies are presented for only a few cases. Also mode shapes for some typical cases are included.

2. Variational derivation of the boundary and eigenvalue problem

Let us consider a frame composed by a column and a beam of length l_1 and l_2 respectively, as shown in Fig. 1. It is supposed that the structure has elastically restrained ends and that the joint point between the column and the beam is also elastically restrained. The rotational restraints are characterized by the spring constants $r_{1(1)}$, $r_{2(1)}$ and $r_{1(2)}$ and the translational restraints by the spring constants $t_{1(1)}$, $t_{2(1)}$, $t_{3(1)}$, $t_{4(1)}$, $t_{1(2)}$ and $t_{2(2)}$. The behavior of the individual members of the frame are assumed to be governed by the Euler–Bernoulli beam theory but the axial deformations effects are also included.

In order to analyze planar displacements of the system under study, it is supposed that the vertical and axial displacements of the beam and the column, are related to their local axes at any time t, and are described by the functions $w_i = w_i(\bar{x}_i, t)$ and $u_i = u_i(\bar{x}_i, t)$, $i = 1, 2$, respectively. Consequently, at time t the kinetic energy of the mechanical system under study is given by

$$T = \sum_{i=1}^{2} \frac{(\rho A)_{(i)}}{2} \int_0^{l_i} \left(\left(\frac{\partial w_i(\bar{x}_i, t)}{\partial t} \right)^2 + \left(\frac{\partial u_i(\bar{x}_i, t)}{\partial t} \right)^2 \right) \mathrm{d}\bar{x}_i, \tag{1}$$

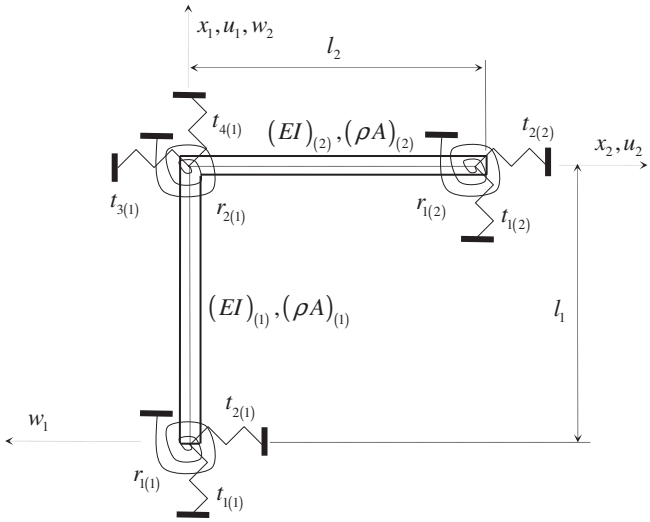

Fig. 1. A planar L-shaped elastically restrained frame.

where $(\rho A)_{(i)}$ denotes the mass per unit length of the i member of the frame.

On the other hand, the potential energy of the mechanical system is given by

$$U = \frac{1}{2}\sum_{i=1}^{2}\int_0^{l_i}\left((EI)_{(i)}\left(\frac{\partial^2 w_i(\bar{x}_i,t)}{\partial \bar{x}_i^2}\right)^2 + (EA)_{(i)}\left(\frac{\partial u_i(\bar{x}_i,t)}{\partial \bar{x}_i}\right)^2\right)\mathrm{d}\bar{x}_i$$
$$+\frac{r_{1(1)}}{2}\left(\frac{\partial w_1(0,t)}{\partial \bar{x}_1}\right)^2 + \frac{t_{1(1)}}{2}u_1^2(0,t) + \frac{t_{2(1)}}{2}w_1^2(0,t) + \frac{r_{2(1)}}{2}\left(\frac{\partial w_1(l_1,t)}{\partial \bar{x}_1}\right)^2$$
$$+\frac{t_{4(1)}}{2}u_1^2(l_1,t) + \frac{t_{3(1)}}{2}w_1^2(l_1,t) + \frac{r_{1(2)}}{2}\left(\frac{\partial w_2(l_2,t)}{\partial \bar{x}_2}\right)^2 + \frac{t_{2(2)}}{2}u_2^2(l_2,t) + \frac{t_{1(2)}}{2}w_2^2(l_2,t), \quad (2)$$

where $(EI)_{(i)}$ and $(EA)_{(i)}$ denote the flexural rigidity and the axial rigidity of the i member of the frame.

Hamilton's principle requires that between times t_a and t_b, at which the positions of the mechanical system are known, it should execute a motion which makes stationary the functional $F(\mathbf{w}) = \int_{t_a}^{t_b}(T-U)\,\mathrm{d}t$, on the space of admissible functions, where $\mathbf{w} = (w_1(x_1,t), u_1(x_1,t), w_2(x_2,t), u_2(x_2,t))$.

The stationary condition required by Hamilton's principle is given by

$$\delta F(\mathbf{w},\mathbf{v}) = 0 \quad \forall \mathbf{v} \in \mathscr{D}_0, \quad (3)$$

where $\mathscr{D}_0$ is the space of admissible directions at $\mathbf{w}$ for the domain $\mathscr{D}$ of the functional. It is convenient to introduce new variables $x_i = \bar{x}_i/l_i, i = 1,2$, and the parameters

$$r_{l_i} = \frac{l_i}{l}, \quad r_{EI_{(i)}} = \frac{(EI)_{(i)}}{EI}, \quad r_{\rho A_{(i)}} = \frac{(\rho A)_{(i)}}{\rho A}, \quad r_{EA_{(i)}} = \frac{(EA)_{(i)}}{EA}, \quad i = 1,2,$$

$$R_{i(1)} = \frac{r_{i(1)} l_1}{(EI)_{(1)}}, \quad i = 1, 2, \quad R_{1(2)} = \frac{r_{1(2)} l_2}{(EI)_{(2)}},$$
$$T_{i(1)} = \frac{t_{i(1)} l_1^3}{(EI)_{(1)}}, \quad i = 1, 2, 3, 4, \quad T_{i(2)} = \frac{t_{i(2)} l_2^3}{(EI)_{(2)}}, \quad i = 1, 2, \tag{4}$$

where l, ρA and EI are generic parameters.

The change of variables and parameters described in Eqs. (4) leads to the following expression of the functional $F(\mathbf{w})$:

$$\begin{aligned} F = {} & \frac{1}{2}\int_{t_a}^{t_b}\left(\sum_{i=1}^{2} A_i \int_0^1 \left(\left(\frac{\partial w_i(x_i,t)}{\partial t}\right)^2 + \left(\frac{\partial u_i(x_i,t)}{\partial t}\right)^2\right) \mathrm{d}x_i\right) \mathrm{d}t \\ & - \frac{1}{2}\int_{t_a}^{t_b}\left(\sum_{i=1}^{2} B_i \int_0^1 \left(\frac{\partial w_i^2(x_i,t)}{\partial x_i^2}\right)^2 \mathrm{d}x_i\right) \mathrm{d}t - \frac{1}{2}\int_{t_a}^{t_b}\left(\sum_{i=1}^{2} C_i \int_0^1 \left(\frac{\partial u_i(x_i,t)}{\partial x_i}\right)^2 \mathrm{d}x_i\right) \mathrm{d}t \\ & - \frac{1}{2}\left[B_1 R_{1(1)} \int_{t_a}^{t_b} \left(\frac{\partial w_1(0,t)}{\partial x_1}\right)^2 \mathrm{d}t + C_1 T_{1(1)} \int_{t_a}^{t_b} (u_1(0,t))^2 \,\mathrm{d}t \right. \\ & + C_1 T_{2(1)} \int_{t_a}^{t_b} (w_1(0,t))^2 \,\mathrm{d}t + B_2 R_{1(2)} \int_{t_a}^{t_b} \left(\frac{\partial w_2(1,t)}{\partial x_2}\right)^2 \mathrm{d}t \\ & + C_2 T_{2(2)} \int_{t_a}^{t_b} (u_2(1,t))^2 \,\mathrm{d}t + C_2 T_{1(2)} \int_{t_a}^{t_b} (w_2(1,t))^2 \,\mathrm{d}t \\ & \left. + B_1 R_{2(1)} \int_{t_a}^{t_b} \left(\frac{\partial w_1(1,t)}{\partial x_1}\right)^2 \mathrm{d}t + C_1 T_{3(1)} \int_{t_a}^{t_b} (w_1(1,t))^2 \,\mathrm{d}t + C_1 T_{4(1)} \int_{t_a}^{t_b} (u_1(1,t))^2 \,\mathrm{d}t\right], \end{aligned} \tag{5}$$

where

$$A_i = \rho A l r_{\rho A_{(i)}} r_{l_i}, \quad B_i = \frac{EI}{l^3} \frac{r_{EI_{(i)}}}{(r_{l_i})^3}, \quad C_i = \frac{EA}{l} \frac{r_{EA_{(i)}}}{r_{l_i}}, \quad i = 1, 2. \tag{6}$$

Taking into account the compatibility conditions $w_2(0,t) = u_1(1,t), -u_2(0,t) = w_1(1,t)$, $\partial w_1(1,t)/\partial x_1 = (l_1/l_2)\partial w_2(0,t)/\partial x_2$ and applying the procedures of calculus of variations in Eq. (3) leads to the following boundary and eigenvalue problem:

$$\frac{\partial^4 w_1(x_1,t)}{\partial x_1^4} + k_1^4 \frac{\partial^2 w_1(x_1,t)}{\partial t^2} = 0, \quad k_1^4 = a^4 \frac{(\rho A)_{(1)}}{\rho A} \frac{EI}{(EI)_{(1)}} \left(\frac{l_1}{l}\right)^4, \tag{7}$$

$$\frac{\partial^2 u_1(x_1,t)}{\partial x_1^2} - p_1^2 \frac{\partial^2 u_1(x_1,t)}{\partial t^2} = 0, \quad p_1^2 = a^4 \frac{(\rho A)_{(1)}}{\rho A} \frac{EA}{(EA)_{(1)}} \frac{I}{Al^2} \left(\frac{l_1}{l}\right)^2, \tag{8}$$

$$\frac{\partial^4 w_2(x_2,t)}{\partial x_2^4} + k_2^4 \frac{\partial^2 w_2(x_2,t)}{\partial t^2} = 0, \quad k_2^4 = a^4 \frac{(\rho A)_{(2)}}{\rho A} \frac{EI}{(EI)_{(2)}} \left(\frac{l_2}{l}\right)^4, \tag{9}$$

$$\frac{\partial^2 u_2(x_2,t)}{\partial x_2^2} - p_2^2 \frac{\partial^2 u_2(x_2,t)}{\partial t^2} = 0, \quad p_2^2 = a^4 \frac{(\rho A)_{(2)}}{\rho A} \frac{EA}{(EA)_{(2)}} \frac{I}{Al^2} \left(\frac{l_2}{l}\right)^2, \tag{10}$$

$$w_2(0,t) = u_1(1,t), \quad -u_2(0,t) = w_1(1,t), \tag{11,12}$$

$$\frac{\partial w_1(1,t)}{\partial x_1} = \left(\frac{l_1}{l_2}\right) \frac{\partial w_2(0,t)}{\partial x_2}, \quad R_{1(1)} \frac{\partial w_1(0,t)}{\partial x_1} = \frac{\partial^2 w_1(0,t)}{\partial x_1^2}, \tag{13,14}$$

$$R_{2(1)} \frac{\partial w_1(1,t)}{\partial x_1} + \frac{\partial^2 w_1(1,t)}{\partial x_1^2} - \frac{(EI)_{(2)}}{(EI)_{(1)}} \left(\frac{l_1}{l_2}\right)^2 \frac{\partial^2 w_2(0,t)}{\partial x_2^2} = 0, \tag{15}$$

$$-T_{1(1)} \frac{(EI)_{(1)}}{EI} \frac{EA}{(EA)_{(1)}} \left(\frac{I}{Al^2}\right) \left(\frac{l}{l_1}\right)^2 u_1(0,t) + \frac{\partial u_1(0,t)}{\partial x_1} = 0, \tag{16}$$

$$T_{2(1)} w_1(0,t) = -\frac{\partial^3 w_1(0,t)}{\partial x_1^3}, \tag{17}$$

$$T_{3(1)} w_1(1,t) - \frac{\partial^3 w_1(1,t)}{\partial x_3^3} + \frac{EI}{(EI)_{(1)}} \frac{(EA)_{(2)}}{EA} \left(\frac{Al^2}{I}\right) \left(\frac{l_1}{l_2}\right) \left(\frac{l_1}{l}\right)^2 \frac{\partial u_2(0,t)}{\partial x_2} = 0, \tag{18}$$

$$T_{4(1)} u_1(1,t) + \frac{(EI)_{(2)}}{(EI)_{(1)}} \left(\frac{l_1}{l_2}\right)^3 \frac{\partial^3 w_2(0,t)}{\partial x_2^3} + \frac{(EA)_{(1)}}{EA} \left(\frac{Al^2}{I}\right) \left(\frac{l_1}{l}\right)^2 \frac{\partial u_1(1,t)}{\partial x_1} = 0, \tag{19}$$

$$R_{1(2)} \frac{\partial w_2(1,t)}{\partial x_2} = -\frac{\partial^2 w_2(1,t)}{\partial x_2^2}, \quad T_{1(2)} w_2(1,t) = \frac{\partial^3 w_2(1,t)}{\partial x_2^3}, \tag{20,21}$$

$$T_{2(2)} \frac{(EI)_{(2)}}{EI} \frac{EA}{(EA)_{(2)}} \left(\frac{I}{Al^2}\right) \left(\frac{l}{l_2}\right)^2 u_1(1,t) + \frac{\partial u_2(1,t)}{\partial x_2} = 0, \tag{22}$$

where $a^4 = (\rho A/EI)l^4$.

3. Determination of the exact solutions

Using the well-known separation of variables method, the solution of Eqs. (7)–(10) are assumed to be of the form:

$$w_1(x_1,t) = \sum_{n=1}^{\infty} w_{1n}(x_1)T(t), \quad u_1(x_1,t) = \sum_{n=1}^{\infty} u_{1n}(x_1)T(t), \tag{23,24}$$

$$w_2(x_2,t) = \sum_{n=1}^{\infty} w_{2n}(x_2)T(t), \quad u_2(x_2,t) = \sum_{n=1}^{\infty} u_{2n}(x_2)T(t). \tag{25,26}$$

The functions $w_{1n}(x_1)$, $u_{1n}(x_1)$, $w_{2n}(x_2)$ and $u_{2n}(x_2)$ denote the corresponding transverse and longitudinal modes of natural vibration and they are, respectively, given by

$$w_{1n}(x_1) = c_1 \cosh(\lambda\alpha_1 x_1) + c_2 \sinh(\lambda\alpha_1 x_1) + c_3 \cos(\lambda\alpha_1 x_1) + c_4 \sin(\lambda\alpha_1 x_1), \tag{27}$$

$$u_{1n}(x_1) = c_5 \cos(\lambda^2\beta_1 x_1) + c_6 \sin(\lambda^2\beta_1 x_1), \tag{28}$$

$$w_{2n}(x_2) = c_7 \cosh(\lambda\alpha_2 x_2) + c_8 \sinh(\lambda\alpha_2 x_2) + c_9 \cos(\lambda\alpha_2 x_2) + c_{10} \sin(\lambda\alpha_2 x_2), \tag{29}$$

$$u_{2n}(x_2) = c_{11} \cos(\lambda^2\beta_2 x_2) + c_{12} \sin(\lambda^2\beta_2 x_2), \tag{30}$$

where

$$\lambda = a\sqrt[4]{\omega_n^2}, \quad \alpha_i = \sqrt[4]{\frac{r_{\rho A_{(i)}}}{r_{EI_{(i)}}}} \cdot r_{l_i} \quad \text{and} \quad \beta_i = \sqrt{\frac{r_{\rho A_{(i)}}}{r_{EA_{(i)}}} \frac{I}{Al^2}} \cdot r_{l_i}, \quad i = 1, 2.$$

Substituting Eqs. (27)–(30) in Eqs. (23)–(26) and then in the boundary conditions (11)–(22) one obtains a set of 12 homogeneous equations in the constants c_i, $i = 1, 2, \ldots, 12$. Since the system is homogeneous for existence of a non-trivial solution the determinant of coefficients must be equal

Table 1
Values of coefficients λ_i, $i = 1, \ldots, 5$, for a frame with elastically restrained ends and without intermediate supports

$T_{1(1)}, T_{2(1)}, T_{1(2)}, T_{2(2)}, R_{1(1)}, R_{1(2)}$	λ_1	λ_2	λ_3	λ_4	λ_5
0	0.00000	0.00000	0.00000	2.05385	4.04051
1	0.97470	0.99109	1.56362	2.33254	4.23583
10	1.70708	1.72732	2.32748	2.87702	4.69096
100	2.93023	2.93336	3.50860	3.98073	5.27911
1000	3.82348	4.44319	5.41265	5.47562	6.76109
∞	3.92225	4.71423	7.03769	7.75888	10.00696

The restraint parameters are $T_{3(1)} = T_{4(1)} = R_{2(1)} = 0$. The geometric and mechanical parameters are: $r_{l_1} = r_{l_2}$, $r_{EI_{(1)}} = r_{EI_{(2)}}$, $r_{\rho A_{(1)}} = r_{\rho A_{(2)}}$, $r_{EA_{(1)}} = r_{EA_{(2)}}$.

Table 2
Values of coefficients λ_i, $i = 1, \ldots, 5$, for a frame with elastically restrained ends and without intermediate supports

$T_{1(1)}, T_{2(1)}$	λ_1	λ_2	λ_3	λ_4	λ_5
0	0.00000	0.83363	1.16215	2.11311	4.04811
1	0.92558	0.98556	1.33896	2.16115	4.05571
10	1.00736	1.47760	1.86202	2.58755	4.12541
100	1.01403	1.70795	2.95432	3.39236	4.51328
1000	1.01469	1.72829	3.53394	4.34804	5.47491
∞	1.01476	1.73046	3.55140	4.46820	6.61624

The restraint parameters are: $T_{3(1)} = T_{4(1)} = R_{1(1)} = R_{2(1)} = R_{1(2)} = 0$, $T_{1(2)} = T_{2(2)} = 1$. The geometric and mechanical parameters are: $r_{l_1} = r_{l_2}$, $r_{EI_{(1)}} = r_{EI_{(2)}}$, $r_{\rho A_{(1)}} = r_{\rho A_{(2)}}$, $r_{EA_{(1)}} = r_{EA_{(2)}}$.

to zero. This procedure yields the frequency equation:

$$G(\lambda, T_{i(k)}, R_{j(k)}, r_{l_k}, r_{EI_{(k)}}, r_{EA_{(k)}}, r_{\rho A_{(k)}}) = 0. \tag{31}$$

4. Results and discussion

Exact solutions are included in Tables 1–5. Tables 1 and 2 depict values of coefficients λ_i, $i = 1, \ldots, 5$ for a frame with elastically restrained ends and without intermediate supports. Tables

Table 3
Values of coefficients λ_i, $i = 1, \ldots, 5$, for a frame with elastically restrained ends with intermediate supports

$R_{1(1)}$, $R_{2(1)}$, $R_{1(2)}$	λ_1	λ_2	λ_3	λ_4	λ_5
0	1.09055	1.10098	1.35132	2.16592	4.05606
1	1.10249	1.10331	1.72616	2.33673	4.29620
10	1.10542	1.10543	2.31853	2.58263	4.98141
100	1.10587	1.10587	2.61222	2.65370	5.52180
1000	1.10592	1.10591	2.65778	2.66218	5.63037
∞	1.10592	1.10592	2.66314	2.66314	5.64374

The restraint parameters are: $T_{1(1)} = T_{2(1)} = T_{3(1)} = T_{4(1)} = T_{1(2)} = T_{2(2)} = 1$. The geometric and mechanical parameters are: $r_{l_1} = r_{l_2}$, $r_{EI_{(1)}} = r_{EI_{(2)}}$, $r_{\rho A_{(1)}} = r_{\rho A_{(2)}}$, $r_{EA_{(1)}} = r_{EA_{(2)}}$.

Table 4
Values of coefficients λ_i, $i = 1, \ldots, 5$, for a frame with elastically restrained ends with intermediate supports

$T_{1(1)}$, $T_{2(1)}$, $T_{3(1)}$, $T_{4(1)}$, $T_{1(2)}$, $T_{2(2)}$	λ_1	λ_2	λ_3	λ_4	λ_5
0	0.00000	0.00000	2.26230	2.53867	4.97596
1	1.10542	1.10543	2.31853	2.58263	4.98141
10	1.95013	1.95027	2.69155	2.89739	5.03087
100	3.27544	3.33965	3.88990	4.04034	5.51181
1000	3.94533	4.30899	6.22115	6.26932	6.96638
∞	4.02566	4.43027	6.93835	7.44986	9.94586

The restraint parameters are: $R_{1(1)} = R_{2(1)} = R_{1(2)} = 10$. The geometric and mechanical parameters are: $r_{l_1} = r_{l_2}$, $r_{EI_{(1)}} = r_{EI_{(2)}}$, $r_{\rho A_{(1)}} = r_{\rho A_{(2)}}$, $r_{EA_{(1)}} = r_{EA_{(2)}}$.

Table 5
Values of coefficients λ_i, $i = 1, \ldots, 5$, for a frame with elastically restrained ends and with intermediate supports

$T_{1(1)}$, $T_{2(1)}$, $T_{3(1)}$, $T_{4(1)}$, $T_{1(2)}$, $T_{2(2)}$	λ_1	λ_2	λ_3	λ_4	λ_5
0	0.00000	0.00000	2.38829	5.08100	5.79255
1	2.18288	2.49432	2.87358	5.14505	5.89858
10	2.66092	3.67441	4.74889	5.47793	6.87996
100	3.72334	4.40942	5.71845	8.22343	8.97102
1000	4.31349	6.22629	7.03839	9.45661	10.98457
∞	4.39813	7.38833	10.21622	10.85143	13.58976

The restraint parameters are: $R_{1(1)} = R_{2(1)} = R_{1(2)} = 10$. The geometric and mechanical parameters are: $r_{l_1} = 1$, $r_{l_2} = \frac{1}{2}$, $r_{EI_{(1)}} = 1$, $r_{EI_{(2)}} = 16$, $r_{\rho A_{(1)}} = 1$, $r_{\rho A_{(2)}} = 4$, $r_{EA_{(1)}} = 1$, $r_{EA_{(2)}} = 4$.

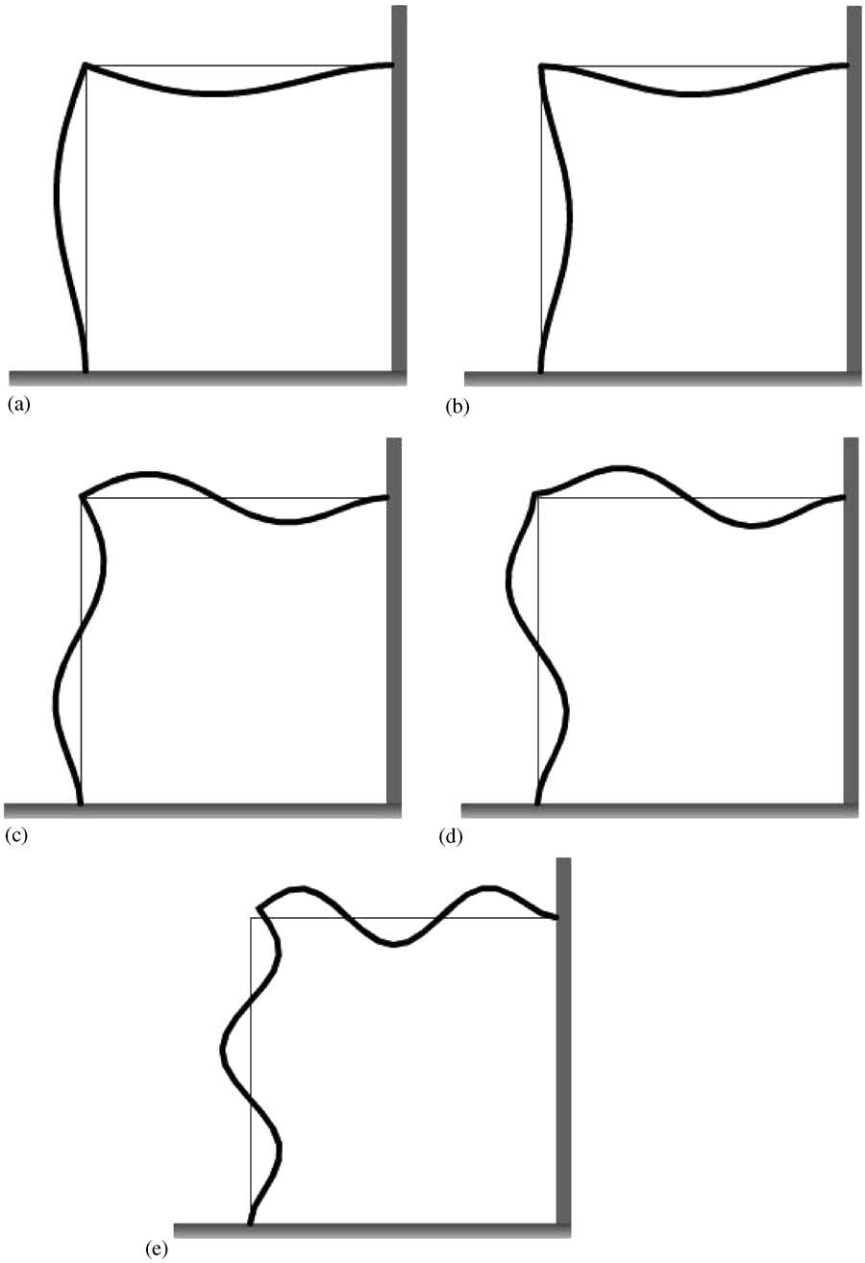

Fig. 2. Mode shapes of the frame with the following parameters: $T_{3(1)} = T_{4(1)} = R_{2(1)} = 0$, $T_{1(1)} = T_{2(1)} = T_{1(2)} = T_{2(2)} = R_{1(1)} = R_{1(2)} = \infty$, $r_{l_1} = r_{l_2}$, $r_{EI_{(1)}} = r_{EI_{(2)}}$, $r_{\rho A_{(1)}} = r_{\rho A_{(2)}}$, $r_{EA_{(1)}} = r_{EA_{(2)}}$. (a) First mode; (b) second; (c) third; (d) fourth; (e) fifth.

3–5 depict values of the same frequency coefficients which correspond to a frame with intermediate elastic constraints and generally restrained ends. All the values depicted in the mentioned tables have been compared to FEM solutions and agreement was found to be

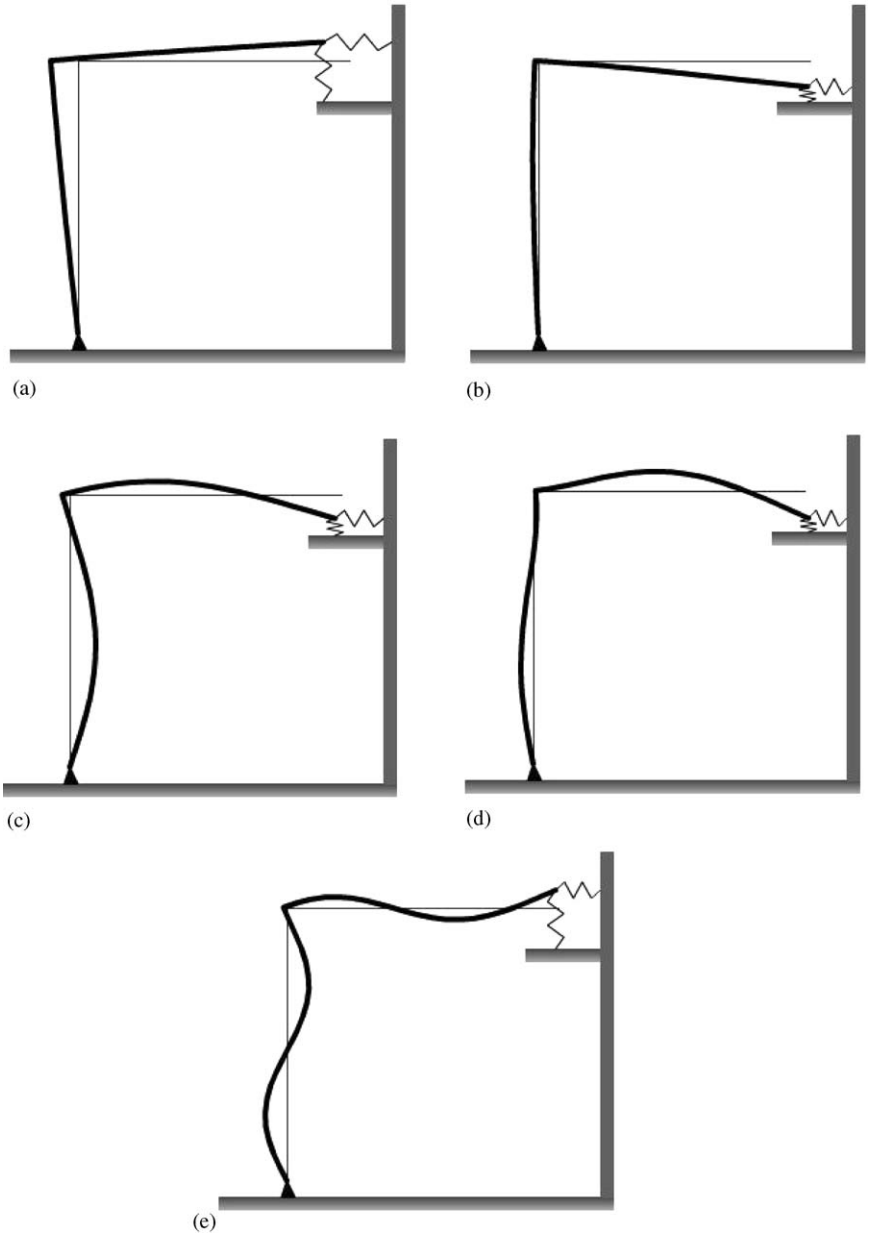

Fig. 3. Mode shapes of the frame with the following parameters: $T_{3(1)} = T_{4(1)} = R_{1(1)} = R_{2(1)} = R_{1(2)} = 0$, $T_{1(2)} = T_{2(2)} = 1$, $T_{1(1)} = T_{2(1)} = \infty$, $r_{l_1} = r_{l_2}$, $r_{EI_{(1)}} = r_{EI_{(2)}}$, $r_{\rho A_{(1)}} = r_{\rho A_{(2)}}$, $r_{EA_{(1)}} = r_{EA_{(2)}}$. (a) First mode; (b) second; (c) third; (d) fourth; (e) fifth.

excellent. The mode shapes of a frame with rigidly clamped ends are presented in Figs. 2(a)–(e). In this case the restraint, geometric and mechanical parameters are given by $T_{3(1)} = T_{4(1)} = R_{2(1)} = 0$, $T_{1(1)} = T_{2(1)} = T_{1(2)} = T_{2(2)} = R_{1(1)} = R_{1(2)} = \infty$, $r_{l_1} = r_{l_2}$, $r_{EI_{(1)}} = r_{EI_{(2)}}$, $r_{\rho A_{(1)}} = r_{\rho A_{(2)}}$, $r_{EA_{(1)}} = r_{EA_{(2)}}$.

Finally, in Figs. 3(a)–(e) the mode shapes of a frame with elastically restrained ends are shown. The restraint, geometric and mechanical parameters are given by $T_{3(1)} = T_{4(1)} = R_{1(1)} = R_{2(1)} = R_{1(2)} = 0$, $T_{1(2)} = T_{2(2)} = 1$, $T_{1(1)} = T_{2(1)} = \infty$, $r_{l_1} = r_{l_2}$, $r_{EI_{(1)}} = r_{EI_{(2)}}$, $r_{\rho A_{(1)}} = r_{\rho A_{(2)}}$, $r_{EA_{(1)}} = r_{EA_{(2)}}$.

Acknowledgements

The present study has been sponsored by the Consejo de Investigación de la Universidad Nacional de Salta.

References

[1] R. Blevins, *Formulas for Natural Frequency and Mode Shape*, Krieger Melbourne, FL, 1993.
[2] C.P. Filipich, B. Valerga de Greco, P.A.A. Laura, A Note on the analysis of symmetric mode of vibrations of portal frames, *Journal of Sound and Vibration* 117 (1) (1987) 198–201.
[3] P.A.A. Laura, B. Valerga de Greco, C.P. Filipich, In-plane vibrations of frames carrying concentrated masses, *Journal of Sound and Vibration* 117 (3) (1987) 447–458.
[4] C.P. Filipich, P.A.A. Laura, In-plane vibrations of portal frames with end supports elastically restrained against rotation and translation, *Journal of Sound and Vibration* 117 (3) (1987) 467–473.
[5] H.P. Lee, T. Ng, In-plane vibrations of planar frames structures, *Journal of Sound and Vibration* 172 (1994) 420–427.
[6] D.C. Oguamanam, J.S. Hansen, G.R. Heppler, Vibrations of arbitrarily oriented two-member open frames with tip mass, *Journal of Sound and Vibration* 209 (1998) 651–669.
[7] G.R. Heppler, J.S. Oguamanam, J.S. Hansen, Vibration of a two-member open frame, *Journal of Sound and Vibration* 263 (2003) 299–317.
[8] H.P. Lin, J. Ro, Vibration analysis of planar serial-frame structures, *Journal of Sound and Vibration* 262 (2003) 1113–1131.
[9] R. Craig, *Structural Dynamics. An Introduction to Computer Methods*, Wiley, New York, 1981.
[10] S. Timoshenko, D.H. Young, *Vibration Problems in Engineering*, Van Nostrand, Princeton, NJ, 1956.
[11] W. Nowacki, *Dynamics of Elastic Systems*, Wiley, New York, 1963.