Journal of Sound and Vibration (1986) **106**(3), 451-463

COMMENTS ON CURVE VEERING IN EIGENVALUE PROBLEMS

N. C. PERKINS AND C. D. MOTE, JR.

Department of Mechanical Engineering, University of California, Berkeley, California 94720, *U.S.A.*

(*Received* 28 *February* 1985, *and in revised form* 13 *June* 1985)

The dependence of eigenvalues on a system parameter is frequently illustrated by a family of loci. When two loci approach each other, they often cross or abruptly diverge. The latter case, called "curve veering", has been observed in approximate solutions associated with discretized models. The influence of discretization in producing curve veering has raised doubt on the validity of many approximate solutions. The existence of curve veering in continuous models is illustrated by presenting the exact solution of an elementary eigenvalue problem. Veering is then examined in a general eigenvalue problem. Criteria are established to distinguish veerings from crossings in both continuous and discretized models. The application of the criteria is illustrated by examples.

1. INTRODUCTION

Eigenvalues are often plotted versus a system parameter creating a family of "root" loci. Two converging loci either do or do not intersect. This clear distinction is often obscure, most notably when approximate solutions are evaluated. The approximate eigenvalues (natural frequencies) for a clamped rectangular membrane [1] are shown in Figure 1. On a large scale, the λ_{13}^2 and λ_{31}^2 loci appear to intersect, but on a small scale, the loci diverge in a manner called "curve veering" [1-3]. An important characteristic of curve veering is that the eigenfunctions associated with the eigenvalues on each locus before veering are interchanged during veering in a rapid but continuous way. For example, the mode shape (eigenfunction) associated with the lower curve in Figures and 1(a) and (b)

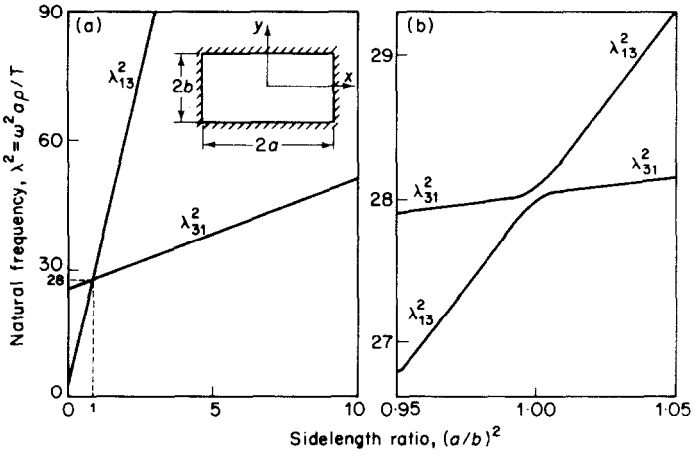

Figure 1. Natural frequencies of the 13 and 31 modes of a clamped rectangular membrane versus side length ratio $(a/b)^2$ [1]. (a) Large scale; (b) small scale.

0022-460X/86/090451 + 13 $03.00/0 © 1986 Academic Press Inc. (London) Limited

for values of $(a/b)^2$ less than 1 is associated with the upper curve for values of $(a/b)^2$ greater than 1.

Curve veering is found in seemingly diverse disciplines. In molecular physics, veerings are called "avoided crossings" [4] while intersections are termed "crossings" [5]. In the plate vibration literature, curve veerings are also called "quasi-degeneracies" [6], and in the study of cable vibrations intersections are termed "mode cross overs" [7].

Even though the literature is rich with approximate solutions showing curve veering, the phenomenon is not universally accepted. The rapid change in the eigenfunctions during veering has raised doubt on the validity of many approximate solutions. As Leissa [1] put it, "..the [eigenfunctions] must undergo violent change—figuratively speaking, a dragonfly one instant, a butterfly the next, and something indescribable in between. Thus the [veered] results appear strange from an esthetic viewpoint." Leissa [1] demonstrated that curve veering in the rectangular membrane problem can be an aberration induced by discretization. His findings highlight the key question: do veerings in discretized (approximate) models represent veerings in continuous models? Kuttler and Sigillito [2], studying the vibration of orthotropic rectangular plates, used an approximate method with error bounds to conclude their solutions correctly exhibit veerings. In the analysis of stiffened and curved plates, Webster and Warburton [8] contrasted their approximate solutions which veer with the approximate solutions of Szechenyi [9] which cross. In his recent review article on cable dynamics [7] Triantafyllou noted that when the ends of a sagged cable are at the same level, the loci exhibit mode cross over (crossings). He then added "In the case of an inclined cable [ends at different levels], there is a remarkable difference ... mode cross over never occurs [the loci veer]."

Considerable numerical effort is often required to verify whether an approximate solution veers or simply crosses. Afterwards, the question still remains regarding the contribution of the discretization in producing the crossing or veering. Thus, the purposes of this study are to validate the existence of curve veering in continuous models by presenting an *exact* eigensolution which veers and to derive simple criteria for predicting veerings and crossings in both continuous and discretized models.

2. CURVE VEERING—AN EXACT SOLUTION

The rotating, circular string problem [10] exhibits veering and can be solved exactly. A circular string of radius r, linear density ρ, and tension P is rotating at radian frequency $\hat{\Omega}$. Figure 2 shows the string guided through an eyelet supported by a spring of stiffness k.

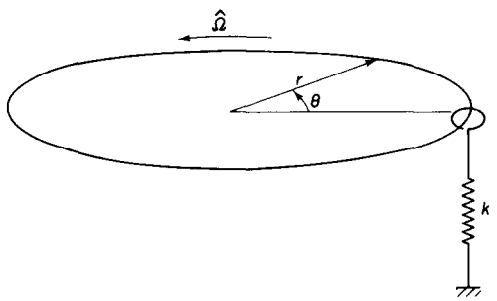

Figure 2. Rotating, guided, circular string [10].

The eigenvalue problem associated with free vibration at frequency $\hat{\omega}$ is

$$-(1-\Omega^2)\,\mathrm{d}^2U/\mathrm{d}\theta^2 = -(\mathrm{i}2\omega\Omega)\,\mathrm{d}U/\mathrm{d}\theta + (\omega^2)U, \qquad \theta \in (0, 2\pi),$$

$$U(0) - U(2\pi) = 0, \qquad \mathrm{d}U(0)/\mathrm{d}\theta - \mathrm{d}U(2\pi)/\mathrm{d}\theta - \beta U(0) = 0,$$

where $\Omega = \hat{\Omega}/s$, $\mathrm{i} = \sqrt{-1}$, $s = \sqrt{P/\rho r^2}$, $\omega = \hat{\omega}/s$, and $\beta = rk/\rho$. The characteristic equation for solutions of the form $\mathrm{e}^{\alpha\theta}$ is

$$\beta \sin\left(\frac{2\pi\omega}{1-\Omega^2}\right) - \left(\frac{4\omega}{1-\Omega^2}\right) \sin\left(\frac{\pi\omega}{1+\Omega}\right) \sin\left(\frac{\pi\omega}{1-\Omega}\right) = 0 \tag{1}$$

defining all eigenvalues ω_n for any values of β and Ω.

For vanishing spring stiffness ($\beta = 0$) the roots of equation (1) are $\omega_m = m(1+\Omega)$ and $\omega_n = n(1-\Omega)$, m, $n = 0, 1, 2, \ldots$, and the forward and backward travelling D'Alembert wave solutions are recovered. The "frequency-speed" loci cross as shown in Figure 3(a). For a rigid eyelet ($\beta \to \infty$) the roots of equation (1) are $\omega_n = (n/2)(1-\Omega^2)$, $n = 1, 2, 3, \ldots$, and the classical "threadline" solution is recovered. These frequency-speed loci never cross, except at $\Omega = 1$ where all the natural frequencies vanish as illustrated in Figure 3(b).

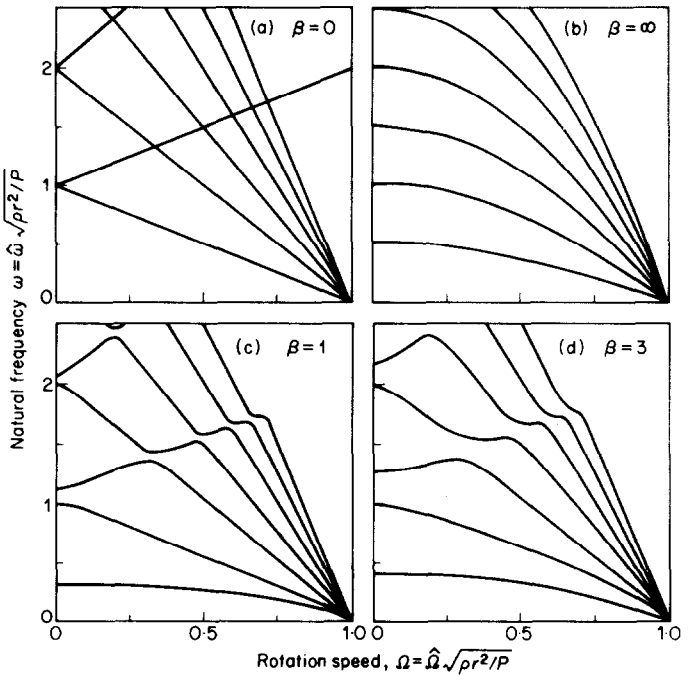

Figure 3. Natural frequencies of the first seven modes of a rotating, guided, circular string versus rotation speed for spring stiffness β. (a) $\beta = 0$; (b) $\beta \to \infty$; (c) $\beta = 1$; (d) $\beta = 3$.

For $\beta = 1$ and $\beta = 3$, the frequency-speed loci illustrate curve veering in the exact solution; see Figures 3(c) and (d). For these cases, approximate eigensolutions were obtained by using the Ritz method [10]. The excellent agreement between the approximate loci in reference [10] and the exact loci here is reassuring since the discretization process can create veering [1].

3. PERTURBATION OF THE EIGENSOLUTIONS IN A GENERAL EIGENVALUE PROBLEM

A perturbative solution of a general eigenvalue problem is obtained to facilitate the analysis of curve veering as follows. Let L, M, and B_i represent homogeneous, linear, differential operators defined in terms of a system parameter E. L is of order $2p$ while M and B_i are of order $2p-1$ at most and M is positive definite over the range of E. For $E = E^0$, the operators are given by L^0, M^0, and B_i^0, defining the unperturbed eigenvalue problem

$$L^0[u^0] = \lambda^0 M^0[u^0] \quad \text{in } \tau, \qquad B_i^0[u^0] = 0, \qquad i = 1, 2, \ldots, p, \quad \text{on } \sigma, \tag{2}$$

with eigensolutions $\{u_n^0, \lambda_n^0\}$, $n = 1, 2, \ldots$. The associated unperturbed adjoint eigenvalue problem is

$$L^*[u^*] = \lambda^* M^*[u^*] \quad \text{in } \tau, \qquad B_i^*[u^*] = 0, \qquad i = 1, 2, \ldots, p, \quad \text{on } \sigma, \tag{3}$$

with eigensolutions $\{u_n^*, \lambda_n^*\}$, $n = 1, 2, \ldots$. The bi-orthogonality conditions are

$$\langle M^0[u_n^0], u_m^* \rangle_\tau = \delta_{mn}, \qquad \langle L^0[u_n^0], u_m^* \rangle_\tau = \lambda_n^0 \delta_{mn} \text{ (no sum)}, \tag{4}$$

where $\langle , \rangle_\tau$ represents an inner product over τ. Any boundary conditions containing eigenvalues can be incorporated in the field equation by extending the definitions of the operators and the eigenfunctions in equations (2) and (3). Then equations (4) hold with an extended inner product definition.

For self-adjoint eigenvalue problems, the eigenfunctions are of rank 1 and form an orthonormal basis for the function space. This is not guaranteed for non-self-adjoint eigenvalue problems. For such cases, the discussion is restricted to eigenvalue problems having *simple* operators for which the eigenfunctions are of rank 1.† Furthermore, the span of the eigenfunctions is assumed to be complete; thus eigenfunction expansion techniques may be employed.

Now let $E = E^0 + \varepsilon$, where ε produces a small perturbation in the operators L, M, and any q $(0 \leq q \leq p)$ boundary operators B_i. These operators become $L = L^0 + l$, $M = M^0 + m$, $B_i = B_i^0 + b_i$, $i = 1, 2, \ldots, q$, where l, m, and b_i are called perturbation operators with norms of order ε. The perturbed eigenvalue problem

$$(L^0 + l)[u] = \lambda(M^0 + m)[u] \quad \text{in } \tau,$$
$$(B_i^0 + b_i)[u] = 0, \qquad i = 1, 2, \ldots, q, \quad \text{on } \sigma, \qquad B_i^0[u] = 0, \qquad i = q+1, \ldots, p \quad \text{on } \sigma, \tag{5}$$

has eigensolutions $\{u_n, \lambda_n\}$, $n = 1, 2, \ldots$.

Consider eigenfunctions of the perturbed problem expressed as Fourier series of the unperturbed eigenfunctions,

$$u_n = \sum_{k=1}^{\infty} c_{nk} u_k^0, \qquad n = 1, 2, \ldots. \tag{6}$$

Substituting equation (6) into equations (5) and using equations (4) yields

$$c_{nm}(\lambda_m^0 - \lambda_n) = \sum_{k=1}^{\infty} c_{nk}(-k_{mk} + \lambda_n m_{mk}), \qquad m = 1, 2, \ldots, \tag{7}$$

where

$$k_{mk} = \langle l[u_k^0], u_m^* \rangle_\tau + \sum_{i=1}^{q} \langle b_i[u_k^0], u_m^* \rangle_\sigma, \qquad m_{mk} = \langle m[u_k^0], u_m^* \rangle_\tau \tag{8}$$

† When the operators are not simple, general eigenfunction expansions could still be introduced in a systematic manner, but such cases will not be pursued.

are of order ε and with $\langle , \rangle_\sigma$ being an inner product on σ. Following reference [11], one considers expansions of c_{nk} and λ_n up to second order in the perturbation parameter:

$$c_{nk} = c^0_{nk} + c^{(1)}_{nk} + c^{(2)}_{nk}, \qquad \lambda_n = \lambda^0_n + \lambda^{(1)}_n + \lambda^{(2)}_n. \tag{9}$$

Substitution of equations (9) into equation (7) yields

$$\{c^0_{nm} + c^{(1)}_{nm} + c^{(2)}_{nm}\}\{\lambda^0_m - (\lambda^0_n + \lambda^{(1)}_n + \lambda^{(2)}_n)\}$$
$$= \sum_{k=1}^{\infty} \{c^0_{nk} + c^{(1)}_{nk} + c^{(2)}_{nk}\}\{-k_{mk} + (\lambda^0_n + \lambda^{(1)}_n + \lambda^{(2)}_n) m_{mk}\}, \qquad m = 1, 2, \ldots. \tag{10}$$

Terms of zeroth order in equation (10) yield $c^0_{nm} = \delta_{nm}$. To first order, equation (10) yields

$$\text{for } m = n, \qquad \lambda^{(1)}_n = k_{nn} - \lambda^0_n m_{nn} \quad \text{and} \quad c^{(1)}_{nn} = 0,$$
$$\text{for } m \neq n, \qquad c^{(1)}_{nm} = (k_{mn} - \lambda^0_n m_{mn})/(\lambda^0_n - \lambda^0_m), \tag{11}$$

and to second order, equation (10) yields

for $m = n$,

$$\lambda^{(2)}_n = m_{nn}\{-k_{nn} + \lambda^0_n m_{nn}\} + \sum_{k \neq n}^{\infty} \frac{\{k_{nk} - \lambda^0_n m_{nk}\}\{k_{kn} - \lambda^0_n m_{kn}\}}{\lambda^0_n - \lambda^0_k} \quad \text{and} \quad c^{(2)}_{nn} = 0,$$

for $m \neq n$

$$c^{(2)}_{nm} = \frac{m_{mn}(k_{nn} - \lambda^0_n m_{nn})}{(\lambda^0_m - \lambda^0_n)} - \frac{(k_{nn} - \lambda^0_n m_{nn})(k_{mn} - \lambda^0_n m_{mn})}{(\lambda^0_m - \lambda^0_n)^2} + \sum_{k \neq n}^{\infty} \frac{(k_{kn} - \lambda^0_n m_{kn})(k_{mk} - \lambda^0_n m_{mk})}{(\lambda^0_m - \lambda^0_n)(\lambda^0_k - \lambda^0_n)}. \tag{12}$$

4. LOCI NEAR A CROSSING OR A VEERING

Assume there exist two nearly equal eigenvalues λ^0_r and λ^0_s for the unperturbed problem satisfying

$$|\lambda^0_r - \lambda^0_s| \leq \varepsilon\{\min_{n,k \neq r,s} |\lambda^0_n - \lambda^0_k|\}.$$

Define

$$a_n = (k_{nn} - \lambda^0_n m_{nn}), \qquad d_n = m_{nn}(-k_{nn} + \lambda^0_n m_{nn}), \qquad x_{mn} = (k_{mn} - \lambda^0_m m_{mn})(k_{nm} - \lambda^0_m m_{nm}). \tag{13}$$

To second order, the perturbation solutions (9) for λ_r and λ_s simplify to

$$\lambda_r = \lambda^0_r + a_r + d_r + x_{rs}/(\lambda^0_r - \lambda^0_s), \qquad \lambda_s = \lambda^0_s + a_s + d_s + x_{sr}/(\lambda^0_s - \lambda^0_r). \tag{14}$$

Note that x_{rs} and x_{sr} measure the coupling of the unperturbed eigenfunctions. The significance of coupling is revealed by constructing the loci $\lambda_r(\varepsilon)$ and $\lambda_s(\varepsilon)$ in a small neighborhood of E^0.

It is assumed that L, M, and B_i depend continuously on E. Thus for fixed u^0_n and u^*_m, a_n, d_n and x_{mn} are continuous functions of E with assumed continuous derivatives up to second order. Expanding each in Taylor series about $E = E^0$, while paying attention to order, produces

$$a_n(\varepsilon) = [D^1 a_n]\varepsilon + \tfrac{1}{2}[D^2 a_n]\varepsilon^2 + Oh(\varepsilon)^3,$$
$$d_n(\varepsilon) = \tfrac{1}{2}[D^2 d_n]\varepsilon^2 + Oh(\varepsilon)^3, \qquad x_{mn}(\varepsilon) = \tfrac{1}{2}[D^2 x_{mn}]\varepsilon^2 + Oh(\varepsilon)^3, \tag{15}$$

where $D^k = \mathrm{d}^k/\mathrm{d}E^k|_{E^0}$, $k = 1, 2, \ldots$. Substituting expressions (15) into equations (14) and retaining terms up to second order yields

$$\lambda_r(\varepsilon) = \lambda_r^0 + [D^1 a_r]\varepsilon + \tfrac{1}{2}[D^2 a_r + D^2 d_r + D^2 x_{rs}/(\lambda_r^0 - \lambda_s^0)]\varepsilon^2,$$
$$\lambda_s(\varepsilon) = \lambda_s^0 + [D^1 a_s]\varepsilon + \tfrac{1}{2}[D^2 a_s + D^2 d_s + D^2 x_{sr}/(\lambda_s^0 - \lambda_r^0)]\varepsilon^2. \tag{16}$$

In the case of complex eigenvalues, the real and imaginary loci of equations (16) are separated. The key point is that when $D^2 x_{rs}$, $D^2 x_{sr}$ (called "coupling factors") are not zero, the loci concavities depend strongly on their separation $|\lambda_r^0 - \lambda_s^0|$. This suggests a natural division of problems into those without and those with coupling of the unperturbed eigenfunctions.

5. LOCI WITHOUT COUPLING: $D^2 x_{sr} = 0 = D^2 x_{rs}$

Without coupling, the $\lambda_r(\varepsilon)$ and $\lambda_s(\varepsilon)$ loci are locally independent and free to cross. Their local concavities depend only on $D^2 a_n$ and $D^2 d_n$ ($n = r, s$ in equations (16)). Frequently, m and b_i vanish while l is linear in ε, leading to $D^2 a_n = D^2 d_n = 0$. In such cases, if two loci cross they do so in a locally linear fashion, crossing either at points of inflection or where they are linear. Locally linear crossings are illustrated in Figure 4 by results taken directly from the literature [3, 12]; C identifies a crossing, VA identifies a veering away.

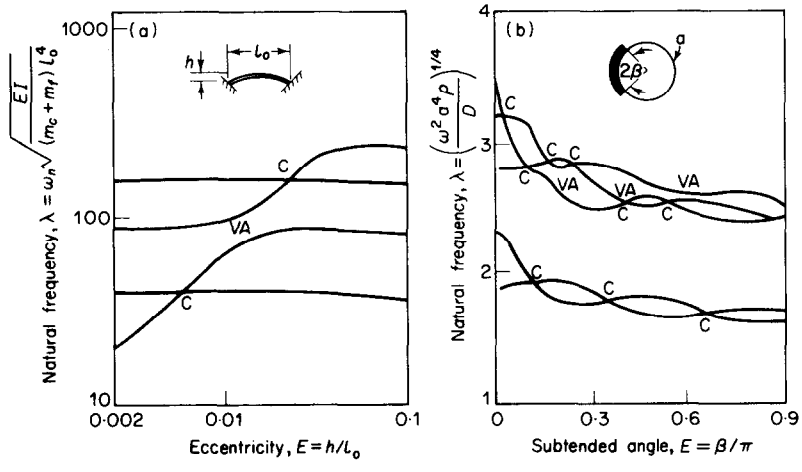

Figure 4. (a) Natural frequencies of the first four modes of a constant curvature ring versus eccentricity ratio E [3]; (b) natural frequencies of the first five modes of a free circular plate versus angle E subtending a uniformly distributed edge mass [12]. C indicates loci crossing, VA indicates loci veering away from each other.

6. LOCI WITH COUPLING: $D^2 x_{sr} \neq 0 \neq D^2 x_{rs}$

As $\lambda_s(\varepsilon)$ and $\lambda_r(\varepsilon)$ approach each other, the coupling terms in equations (16) increase in magnitude. Consider separately self-adjoint and non-self-adjoint eigenvalue problems.

For self-adjoint eigenvalue problems $D^2 x_{sr}$, $D^2 x_{rs} > 0$. If $\lambda_r^0 > \lambda_s^0$ then as the loci approach each other the $\lambda_r(\varepsilon)$ locus becomes increasingly concave up while the $\lambda_s(\varepsilon)$ locus becomes increasingly concave down causing the loci to veer *away* from each other. Herzberg [13] concurs: "[when coupling exists] there is an apparent repulsion of any two states [loci] which is stronger the closer they are together". Thus, curve veering is characterized by *rapid and opposite* changes in the local concavities of the loci. Results

of three self-adjoint eigenvalue problems taken directly from the literature [1, 3, 12] are reproduced in Figures 1 and 4 to illustrate veering away (VA).

For non-self-adjoint eigenvalue problems, D^2x_{sr} and D^2x_{rs} are, in general, sign indefinite and complex. Three cases must be treated.

When the real (imaginary) parts of D^2x_{sr} and D^2x_{rs} are of opposite sign, the concavities of the real (imaginary) parts of the $\lambda_r(\varepsilon)$ and $\lambda_s(\varepsilon)$ loci are of the same sign. The loci now veer *with* each other as they approach each other. No conclusions can be drawn regarding veerings or crossings. Figure 5, illustrating loci veering with each other (VW), was reproduced directly from the discussion in reference [14] of a non-self-adjoint eigenvalue problem.

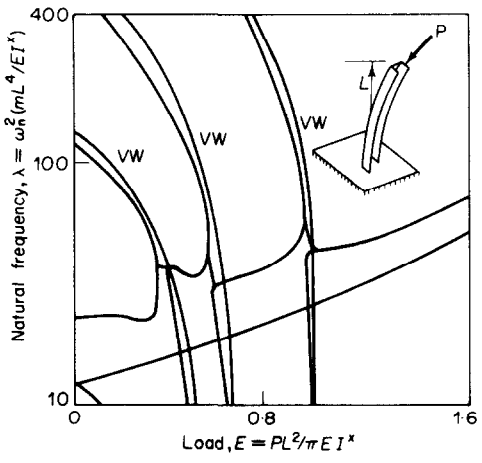

Figure 5. Natural frequencies of a cantilevered channel with follower end load applied through shear center versus load parameter E [14]. WV indicates loci veering with each other.

When the real (imaginary) parts of D^2x_{sr} and D^2x_{rs} are both positive, the real (imaginary) parts of the λ_s and λ_r loci veer away from each other as in the self-adjoint case. Veering away (VA) in a non-self-adjoint eigenvalue problem is illustrated in Figure 6; see reference [15].

Finally, when the real (imaginary) parts of D^2x_{sr} and D^2x_{rs} are both negative, the real (imaginary) parts of the $\lambda_r(\varepsilon)$ and $\lambda_s(\varepsilon)$ loci rapidly veer *towards* each other as they approach. It is observed that this behavior is often linked with eigenvalue coalescence and the onset of flutter instability. Figure 6 illustrates loci veering towards each other (VT) in the non-self-adjoint eigenvalue problem of reference [15]. Thus veering "towards" and "away" from each other can be found in the same (non-self-adjoint) problem.

7. EXAMPLE 1: COUPLED OSCILLATOR

The system in Figure 7 is composed of two equal masses m, located by x_1 and x_2 and three springs of stiffness k_1, k_x, k_2.

The eigenvalue problem associated with free vibration at frequency ω_n is

$$\begin{vmatrix} 1+r^2 & -r^2 \\ -r^2 & E+r^2 \end{vmatrix} \begin{vmatrix} u_1 \\ u_2 \end{vmatrix} = \lambda \begin{vmatrix} u_1 \\ u_2 \end{vmatrix},$$

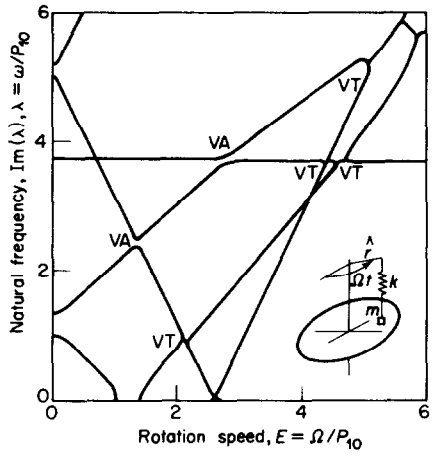

Figure 6. Natural frequencies, Im (λ), of the first four modes of a centrally clamped circular plate versus the rotation speed E of the guide mass m [15]. VA indicates loci veering away from each other. VT indicates loci veering towards each other.

where $r^2 = k_x/k_1$, $E = k_2/k_1$ and $\lambda = \omega_n^2 m/k_1$. Let $E = E^0$ define the unperturbed problem and $E = E^0 + \varepsilon$ define the perturbed problem. The perturbation operator is

$$l = \varepsilon \begin{vmatrix} 0 & 0 \\ 0 & 1 \end{vmatrix}.$$

For $r^2 = 0$ (no coupling), the eigensolutions of the unperturbed problem

$$\lambda_1^0 = 1, \qquad \underline{u}_1^0 = \begin{vmatrix} 1 \\ 0 \end{vmatrix}, \qquad \lambda_2^0 = E^0, \qquad \underline{u}_2^0 = \begin{vmatrix} 0 \\ 1 \end{vmatrix},$$

$$\text{give} \quad D^2 x_{12} = D^2 x_{21} = d_1 = d_2 = 0,$$

with $a_n (n = 1, 2)$ linear in ε. A locally linear crossing is predicted which agrees with the exact solution at $E = 1$, as shown by the solid curves in Figure 8.

For $r^2 > 0$ (coupling) and $E^0 = 1$, the eigensolutions of the unperturbed problem

$$\lambda_1^0 = 1, \qquad \underline{u}_1^0 = \frac{1}{\sqrt{2}} \begin{vmatrix} 1 \\ 1 \end{vmatrix}, \qquad \lambda_2^0 = 1 + 2r^2, \qquad \underline{u}_2^0 = \frac{1}{\sqrt{2}} \begin{vmatrix} -1 \\ 1 \end{vmatrix},$$

give $D^2 x_{12} = D^2 x_{21} = 1/2$. In this case, the loci veer in the neighborhood of $E^0 = 1$ as shown by the exact solution (see the dashed curves Figure 8).

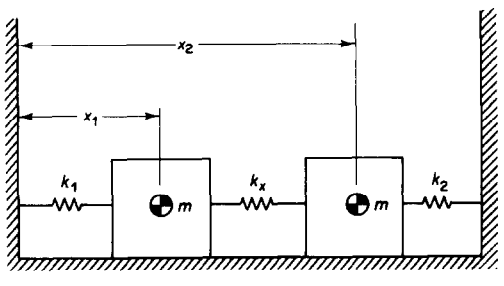

Figure 7. Coupled oscillator.

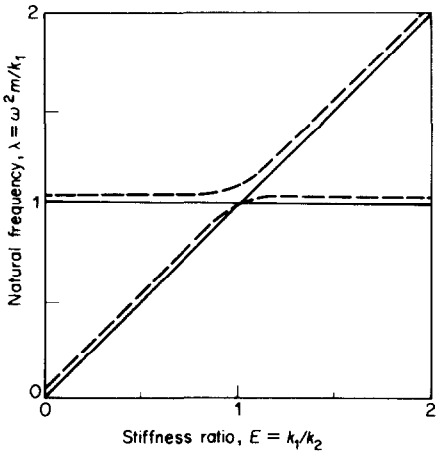

Figure 8. Natural frequencies of the coupled oscillator in Figure 7 versus stiffness ratio E. $r^2 = k_x/k_1$. — — —, $r^2 = 0{\cdot}05$; ——, $r^2 = 0$.

8. EXAMPLE 2: LINEAR VIBRATIONS OF CABLES

The "flat-sag" cable problems of references [7, 16] illustrate how problem symmetry may be used to predict veerings and crossings by inspection alone.

8.1. HORIZONTAL CABLE

A uniform cable hanging from fixed ends at equal elevations is shown in Figure 9. Displacement from equilibrium is given by w.

The associated (self-adjoint) eigenvalue problem [16]

$$-\mathrm{d}^2\hat{w}/\mathrm{d}\hat{x}^2 + E\left(\int_0^1 \hat{w}(\xi)\,\mathrm{d}\xi\right) = \lambda\hat{w} \quad \text{in} \quad \tau = \{\hat{x}\colon \hat{x} \in (0, 1)\}, \tag{17}$$

with $\hat{w} = 0$ on $\sigma = \{\hat{x} = 0, 1\}$, has eigensolutions $\{\lambda_n, \hat{w}_n\}$, $n = 1, 2, \ldots$. The system parameter E is a measure of cable stiffness and tension and λ_n is the square of a non-dimensional natural frequency.

It is easily verified that $D^2x_{sr} = D^2x_{rs} = 2\{\int_0^1 (\int_0^1 \hat{w}_r(\xi)\,\mathrm{d}\xi)\hat{w}_s(\eta)\,\mathrm{d}\eta\}^2$. The equilibrium configuration is symmetric about $\hat{x} = \frac{1}{2}$ and the eigenfunctions (modes) $\hat{w}_n$ are symmetric and antisymmetric about $\hat{x} = \frac{1}{2}$ [16]. Thus, two loci may cross ($D^2x_{sr} = 0$) if at least one

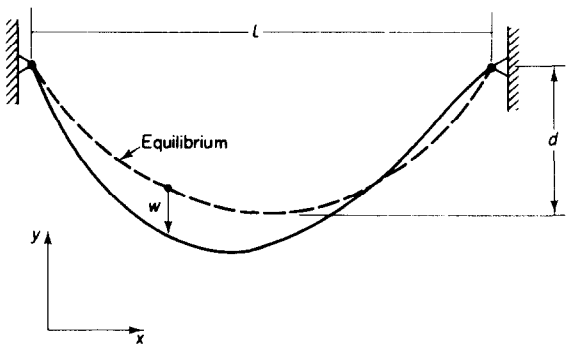

Figure 9. Horizontally supported cable.

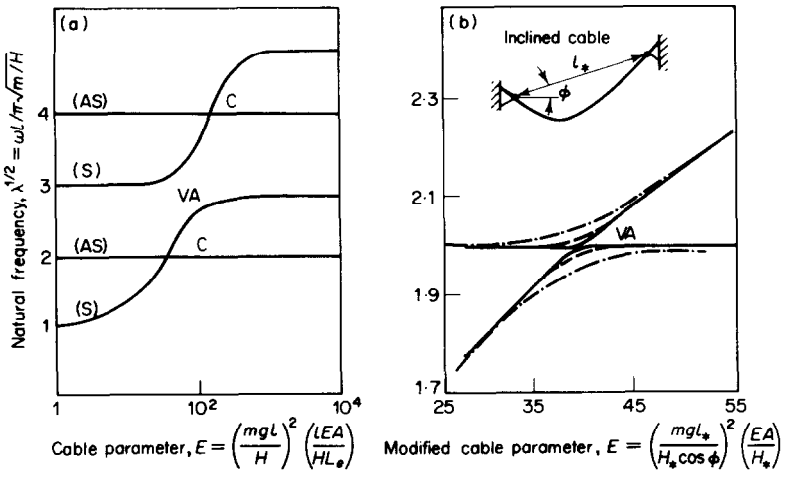

Figure 10. Natural frequencies of a flat-sag cable. Frequency versus stiffness/tension parameter E. (a) Horizontal supports: first two symmetric (S) and first two antisymmetric (AS) vibration modes [16]; (b) inclined supports: first two vibration modes for inclination angles $\phi = 1°$, 15°, and 30° [7]. C indicates loci crossing and VA indicates loci veering away from each other. For (b): ——, $\phi = 1°$; - - -, $\phi = 15°$; — · —, $\phi = 30°$.

of them is associated with an antisymmetric mode. Furthermore, because a_n is linear in ε and $d_n = 0$, all crossings must be locally linear. Exact solution [16] of equation (17) is shown in Figure 10(a). The loci associated with symmetric (S) modes veer away from each other but cross the loci associated with antisymmetric (AS) modes at inflection points.

8.2. INCLINED CABLE

In the case of a cable with supports at different levels (inclined cable), the equilibrium is no longer symmetric about $\hat{x} = \frac{1}{2}$. In general, the eigenfunctions are a mixture of symmetric and antisymmetric components and the loci now veer [7] (see Figure 10(b)).

9. EXAMPLE 3: RECTANGULAR MEMBRANE VIBRATION

The rectangular membrane analysis by Leissa [1] is reviewed in order to illustrate the influence of discretization on veerings and crossings.

The (self-adjoint) eigenvalue problem governing the free vibration of the clamped, rectangular membrane of Figure 11 is

$$-\partial^2 w/\partial\xi^2 - E(\partial^2 w/\partial\eta^2) = \lambda w \quad \text{in } \tau = \{(\xi, \eta): \xi, \eta \in (-1, 1)\},$$

$$w = 0 \quad \text{on } \sigma = \{(\xi, \eta): \xi, \eta = +1, -1\},$$

with $E = (a/b)^2$, and has eigenvalues $\lambda_{mn}(E) = (\pi/2)^2[m^2 + En^2]$, $m, n = 1, 2, \ldots$.

Consider the crossing of the λ_{13} and λ_{31} loci at $E = 1$. Following reference [1], an approximate solution is determined by the classical Galerkin method with expansion series

$$w(\xi, \eta) = (\xi^2 - 1)(\eta^2 - 1) \sum_{i,j}^{M,N} c_{ij}\xi^i\eta^j, \qquad i, j = 0, 2, 4, \ldots, \tag{18}$$

where only the symmetric terms in ξ and η are retained.

With $E = E^0$ defining the unperturbed problem, the perturbation operator becomes $l = -\varepsilon\partial^2 w/\partial\eta^2$. From equations (8) and (13) $a_{(pq)}$ is linear in ε and $d_{(pq)} = 0$. Thus, if the

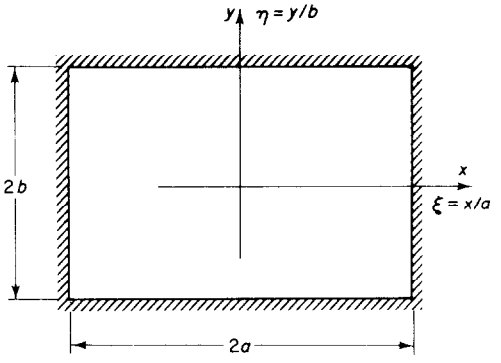

Figure 11. Clamped rectangular membrane.

coupling factors $D^2x_{(pq)(rs)} = D^2x_{(rs)(pq)}$ are zero, any crossing must be locally linear. Approximate solutions to the unperturbed problem in a neighborhood of $E^0 = 1$ have been found and used to compute the coupling factor $D^2x_{(13)(31)}$. Table 1 lists the coupling factor determined using the first three terms (c_{00}, c_{02}, c_{20}) of equation (18) and the first four terms (adding c_{22}) of equation (18).

The results predict a veering for the three term solution but a locally linear crossing for the four term solution. These expectations agree with the eigenvalues λ_{13} and λ_{31} calculated in the interval $0{\cdot}95 \leq E \leq 1{\cdot}05$ for the two solutions (see Figure 12). Note that while curve veering "aberrations" may be introduced by discretization [1], in this case the addition of one more term changes the solution from a veering to a crossing! The symmetry of membrane and plate eigenfunctions often permits the prediction of crossings prior to discretization [6].

Finally, recall that while the Galerkin method preserves the (non-)self-adjoint property of the continuous model, most discretization methods do not. In particular, the collocation and least squares methods may destroy and create self-adjointness, respectively, in passing to the discrete model. This can affect the veering/crossing possibilities of the approximate solution.

TABLE 1

Coupling factor, $D^2x_{(13)(31)}$ for clamped rectangular membrane in the neighborhood of side length ratio $E^0 = 1$; for three term expansion c_{00}, c_{02}, and c_{20} used in equation (19); for four term expansion c_{00}, c_{02}, c_{20}, and c_{22} used in equation (18); f^2 is a positive scale factor

	$f^2 * D^2x_{(13)(31)}$	
E^0	3-term	4-term
0·95	431·78	0·00
0·97	1192·76	0·00
0·99	10035·09	0·00
1·01	10020·29	0·00
1·03	1192·13	0·00
1·05	431·64	0·00

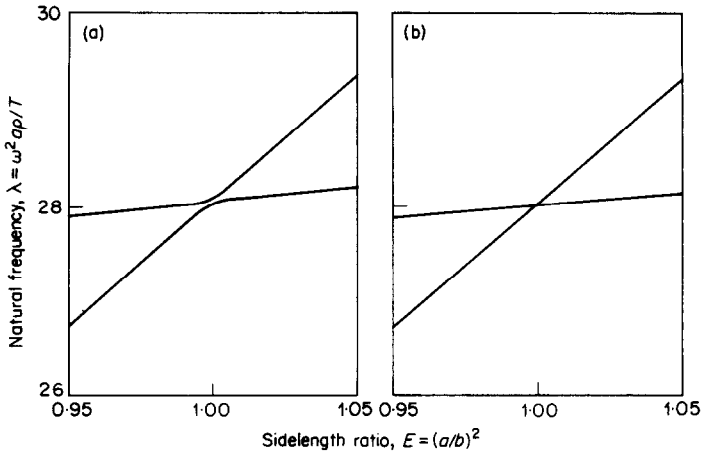

Figure 12. Natural frequencies of the 13 and 31 modes of a clamped rectangular membrane versus side length ratio E. (a) 3-term expansion with c_{00}, c_{02}, and c_{20} used in equation (18); (b) 4-term expansion with c_{00}, c_{02}, c_{20}, c_{22} used in equation (19).

10. SUMMARY AND CONCLUSIONS

The existence of curve veering in continuous models is verified by obtaining an exact solution for the rotating, guided, circular string model. A general eigenvalue problem is analyzed and algebraic expressions for the root loci in a small neighborhood about a veering/crossing are obtained. From these expressions the following are noted. Curve veering is characterized by rapid and opposite change in root loci concavities. Veering reflects the coupling of eigenfunctions as the system parameter is varied; a tendency measured by the coupling factors D^2x_{sr}, D^2x_{rs}.

Criteria for differentiating a veering from a crossing are presented. To apply the criteria, the coupling factors D^2x_{sr} and D^2x_{rs} are computed from knowledge of the eigenfunctions in the neighborhood of a suspected veering. If the eigenfunctions of the unperturbed problem possess symmetry, the cases of coupling or no coupling may be deduced without computation. The criteria accurately predict the veering and crossing possibilities in continuous and discretized models.

ACKNOWLEDGMENT

The authors gratefully acknowledge the Exxon Education Foundation for their graduate student support and the National Science Foundation for their partial support of this research endeavor.

REFERENCES

1. A. W. LEISSA 1974 *Journal of Applied Mathematics and Physics* (*ZAMP*) **25**, 99–111. On a curve veering abberation.
2. J. R. KUTTLER and V. G. SIGILLITO 1981 *Journal of Sound and Vibration* **75**, 585–588. On curve veering.
3. R. W. DOLL and C. D. MOTE, JR. 1976 *Journal of Pressure Vessel Technology* **98**, 143–149. On the dynamic analysis of curved and twisted cylinders transporting fluids.
4. R. RAMASWAMY and R. A. MARCUS 1981 *Journal of Chemistry and Physics* **72**, 1379–1384. Perturbative examination of avoided crossings.
5. E. TELLER 1937 *Journal of Physics and Chemistry* **109**, 975–986. The crossing of potential surfaces.

6. P. S. NAIR and S. DURVASULA 1973 *International Journal of Mechanical Science* **15**, 975–986. On quasi-degeneracies in plate vibration problems.
7. M. S. TRIANTAFYLLOU 1984 *Shock and Vibration Digest* **16**, 9–17. Linear dynamics of cables and chains.
8. J. J. WEBSTER and G. B. WARBURTON 1971 *Journal of Sound and Vibration* **18**, 139–141. Discussion of "Approximate methods for the determination of the natural frequencies of stiffened and curved plates".
9. E. SZECHENYI 1971 *Journal of Sound and Vibration* **14**, 401–418. Approximate methods for the determination of the natural frequencies of curved and stiffened plates.
10. G. S. SCHAJER 1984 *Journal of Sound and Vibration* **92**, 11–19. The vibration of a rotating circular string subject to a fixed end restraint.
11. L. D. LANDAU and E. M. LIFSHITZ 1958 *Quantum Mechanics Non-Relativistic Theory.* London: Pergamon Press.
12. A. W. LEISSA and Y. NARITA 1980 *Proceedings of the Tenth S.E. Conference on Theoretical and Applied Mechanics* **10**, 269–279. Vibration of a free circular plate with nonuniform mass added to its boundary.
13. G. HERZBERG 1967 *Spectra of Diatomic Molecules.* Princeton, New Jersey: D. Van Nostrand second edition.
14. C. D. MOTE JR. and G. Y. MATSUMOTO 1972 *American Society of Civil Engineers, Journal of Engineering Mechanics* **98**, 595–608. Coupled, nonconservative stability by finite element.
15. W. D. IWAN and K. J. STAHL 1973 *Journal of Applied Mechanics* **40**, 445–451. The response of an elastic disk with a moving mass system.
16. H. M. IRVINE 1981 *Cable Structures.* Cambridge, Mass: MIT Press.