Ingenieur-Archiv 59 (1989) 456–472

Ingenieur-Archiv
© Springer-Verlag 1989

Finite axisymmetric deformation of shells of revolution with application to flexural buckling of circular plates

J. Makowski and **H. Stumpf**, Bochum

Summary: A new theory is presented for shells of revolution undergoing axisymmetric arbitrarily large strain deformations. The material of the shell is assumed to be hyperelastic incompressible. The formulated theory is applied to analyse the flexural buckling of circular plates under uniform radial loads.

Endliche achsensymmetrische Verformung von Rotationsschalen mit Anwendung auf das Beulen von Kreisplatten

Übersicht: Eine neue Theorie zur Berechnung achsensymmetrischer Verformungen von Rotationsschalen unter Berücksichtigung beliebig großer Dehnungen wird angegeben. Das Material der Schale wird hyperelastisch und inkompressibel angenommen. Die Theorie wird zur Berechnung des Beulens von Kreisplatten unter gleichmäßiger Radialbelastung angewandt.

1 Introduction

A general theory of finite symmetrical deflections of thin shells of revolution based on the classical Kirchhoff-Love hypothesis has been developed by Reissner [1] and Alumäe [2]. In this theory, strains are assumed to be small and effects of transverse shear and transverse normal deformations are neglected. The basic equations of this theory are formulated in terms of rotation and stress function. Recently Makowski and Nolte [3], and Simmonds [4] have shown that within the first approximation shell theory an equally attractive formulation of Reissner's equations can be obtained in terms of displacements.

In [5, 6] Reissner has modified his theory for axisymmetric deformation of shells of revolution in order to account for transverse shear deformation and large strain effects preserving, however, the assumption of constant shell thickness. Field equations and boundary conditions valid for finite strain axisymmetric deformation of shells of revolution can also be derived within the framework of Cosserat shell theory outlined by Antman [7], and Cohen and Pastrone [8]. However, in [5–8] no attempt has been made to determine the explicite form of the constitutive equations leaving this main problem of the shell theory unsolved.

Only recently major efforts have been devoted to the determination of the constitutive equations for finite strain axisymmetric deformations of shells of revolution. Apparently, Chernykh [9, 10] was the first to show a rational way to reach this goal. Specifically he assumed that material fibres initially normal to the reference surface remain normal but may undergo a transverse normal deformation specified by a second order polynomial in the normal coordinate. The coefficients of this polynomial are determined by using the incompressibility condition.

Effects due to transverse normal deformation were accounted for more accurately by Taber [11], and later by Brodland and Cohen [12, 13]. In these papers the determination of the constitutive equations is based on three assumptions: I. Material fibres normal to the mid-surface remain normal, II. the deformation is isochoric, III. material coordinates in the shell space coincide with the principal directions of deformation. It is this third assumption simplifying considerably the analysis, which makes this approach inapplicable in the case of general shells,

because the principle direction of the deformation are not known in advance. Stumpf and Makowski [14] have shown that the transverse normal deformation may be uniquely determined, even for general shells, by using the first and second assumption. Thus the third assumption is not only superfluous but also in contradiction to the first and second one.

Constitutive equations for axishells were recently derived also by Simmonds [15, 16]. The presented results are based on order of magnitude estimations for some parameters characterizing the initial geometry and the deformation of the shell. They are valid for incompressible and compressible materials as well. For incompressible material the constitutive equations of [15] can also be obtained within the approach used in [11—14] if corresponding smallness assumptions are introduced. However, if the shell is not very thin or strong bending takes place, the order of magnitude estimations of [15, 16] become critical.

In the papers [9—16] the effects due to transverse shear deformation have been neglected in the determination of the constitutive equations. They have been accounted for in a very restricted form by Cook [17, 18] and in a more rational form by Taber [19].

In accordance with a conventional understanding of shell theory thickness assumptions play a dominant role in the investigations [1—20] of Reissner type theories of axisymmetric shells of revolution. This assumption is invoked parallely with some kinematical hypothesis. However it is to be noted that potential applications of finite strain theories are to be expected in the analysis of structural elements made of rubber-like materials that in turn are relatively thick. Moreover, for special cases as, e.g. radially symmetric deformations of spherical shells, a large strain shell theory should provide an accurate solution independent of the shell thickness. Recently, Makowski and Stumpf [21] have shown that for rubber-like materials a complete set of equations for shells of arbitrary geometry can be obtained within a single kinematical constraint: material fibres initially normal to the shell reference surface remain straight during the deformation. This assumption is weak enough to accomodate not only transverse shear deformation but also an arbitrary transverse normal deformation consistent with the incompressibility condition. Moreover, in the development of the constitutive relations strains and rotations are allowed to be unrestricted and no explicite assumption is made concerning the shell thickness.

Following the approach outlined in [21] we investigate in this paper the axisymmetric deformation and buckling of shells of revolution. A detailed analysis is performed for the flexural buckling of circular plates under radial loads. In Sect. 2 we first present the basic geometrical shell equations. Then, in Sect. 3, introducing appropriate strain measures and work-conjugate stress measures we derive the complete set of shell equations describing the large strain deformation. Using a variational procedure corresponding to the energy criterion of stability the equations of critical equilibrium are determined in Sect. 4 in an appropriate vector form. Section 5 is devoted to the study of a number of constitutive properties, which are crucial in the analysis of large strain boundary value problems.

Finally, in Sect. 6, the flexural buckling of circular plates under radial loads is investigated and the buckling problem is reduced to a nonlinear eigenvalue problem. Results are presented for shearable and unshearable models demonstrating that the shear deformation can change the buckling behavior essentially. Furthermore a comparative analysis is performed by using a strain energy function derived in the literature.

2 Geometry of the deformation

In this chapter we deduce a nonlinear theory of axisymmetric deformation of shells of revolution from the three-dimensional theory in a way which is logically straightforward and emphasizes the underlying assumptions. In order to make the paper self-contained we first recall the basic relations for the axisymmetric deformation of the surface of revolution. Our notation scheme is standard. In particular, bold-face letters denote vectors in the Euclidean 3-space and $\mathbf{a} \cdot \mathbf{b}$, $\mathbf{a} \times \mathbf{b}$ and $\mathbf{a} \otimes \mathbf{b}$ denote the inner product, the cross product and the tensor product, respectively, of two vectors $\mathbf{a}$ and $\mathbf{b}$. The value of the second-order tensor $\mathbf{T}$ at the vector $\mathbf{u}$ is denoted by $\mathbf{Tu}$, and $\mathbf{T}^T$ and $\det\mathbf{T}$ are the standard notations for the transpose and the determinant of $\mathbf{T}$.

Let $\{\mathbf{i}, \mathbf{j}, \mathbf{k}\}$ be a fixed right-handed orthonormal basis for the Euclidean space and let r, θ, z denote cylindrical coordinates with the associate unit base vectors

$$\mathbf{e}_r(\theta) = \cos\theta\,\mathbf{i} + \sin\theta\,\mathbf{j}, \qquad \mathbf{e}_\theta(\theta) = -\sin\theta\,\mathbf{i} + \cos\theta\,\mathbf{j}, \qquad \mathbf{e}_z = \mathbf{k} \tag{2.1}$$

for $\theta \in [0, 2\pi]$. An undeformed configuration of the shell of revolution is specified by (Fig. 1)

$$\mathbf{X}(s, \theta, \xi) = \mathbf{r}(s, \theta) + \xi\mathbf{e}_3(s, \theta), \qquad \xi \in [-h_0^-, +h_0^+] \tag{2.2}$$

where

$$\mathbf{r}(s, \theta) = r(s)\,\mathbf{e}_r(\theta) + z(s)\,\mathbf{e}_z, \qquad r(s) \geqq 0 \tag{2.3}$$

is the position vector of a shell reference surface $\mathcal{M}$ and $\{\xi^i\} = \{s, \theta, \xi\}$, $(i = 1, 2, 3)$, are material coordinates taken to be normal ones in the shell space. The orthonormal triad $\{\mathbf{e}_i\}$ associated with $\mathcal{M}$ is defined by

$$\mathbf{e}_1 = \mathbf{r}', \qquad \mathbf{e}_2 = r^{-1}\mathbf{r}^{\cdot} \equiv \mathbf{e}_\theta, \qquad \mathbf{e}_3 = \mathbf{e}_1 \times \mathbf{e}_2. \tag{2.4}$$

Here and henceforth $(\ )'$, $(\ )^{\cdot}$ and $(\ )_{,\xi}$ indicate the partial derivatives with respect to the coordinates s, θ and ξ, resp., with s being the arc length parameter along the undeformed meridians. The vectors $\mathbf{e}_i$ are functions of s and θ and their derivatives are given by

$$\mathbf{e}_i' = \mathbf{K}_s \times \mathbf{e}_i, \qquad \mathbf{e}_i^{\cdot} = r\mathbf{K}_\theta \times \mathbf{e}_i \qquad (i = 1, 2, 3) \tag{2.5}$$

where $\mathbf{K}_s$ and $\mathbf{K}_\theta$ are the vectors of curvature of the undeformed reference surface

$$\begin{aligned} &\mathbf{K}_s = -K_s\mathbf{e}_\theta, \qquad \mathbf{K}_\theta = K_\theta\mathbf{e}_1 - K_n\mathbf{e}_3, \\ &K_s = -\varphi', \quad K_\theta = -\frac{\sin\varphi}{r}, \quad K_n = -\frac{\cos\varphi}{r}, \end{aligned} \tag{2.6}$$

and the angle $\varphi(s)$ is defined in Fig. 1.

The natural base vectors in the shell space follow from (2.2) and (2.5):

$$\mathbf{g}_1 = \mathbf{X}' = (1 - K_s\xi)\,\mathbf{e}_1, \qquad \mathbf{g}_2 = \mathbf{X}^{\cdot} = r(1 - K_\theta\xi)\,\mathbf{e}_\theta, \qquad \mathbf{g}_3 = \mathbf{X}_{,\xi} = \mathbf{e}_3. \tag{2.7}$$

The reciprocal base vectors $\mathbf{g}^i$ defined by $\mathbf{g}^i \cdot \mathbf{g}_j = \delta^i_j$, $(i, j = 1, 2, 3)$, and the components of the metric tensors $g_{ij} = \mathbf{g}_i \cdot \mathbf{g}_j$, $g^{ij} = \mathbf{g}^i \cdot \mathbf{g}^j$ can now easily be obtained. We only note that

$$\begin{aligned} &g(s, \xi) = \det g_{ij} = r^2\mu^2, \qquad \mu = 1 - 2H\xi + K\xi^2 > 0, \\ &H = (K_s + K_\theta)/2, \qquad K = K_sK_\theta \end{aligned} \tag{2.8}$$

where H and K are the mean and Gaussian curvatures of the reference surface $\mathcal{M}$.

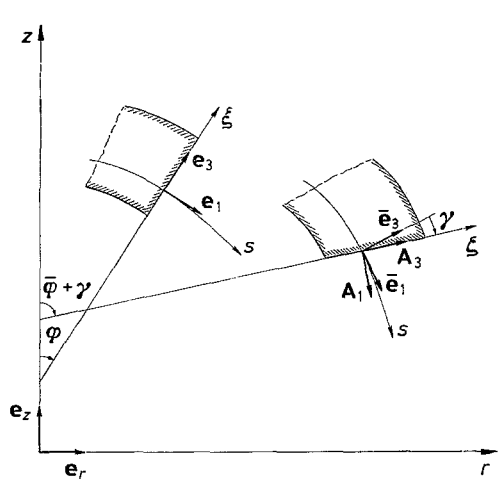

Fig. 1. Geometry of axisymmetric shell element

In a process of torsionless, axisymmetric deformation of the shell the undeformed reference surface $\mathcal{M}$ maps into another surface of revolution $\bar{\mathcal{M}}$ given by

$$\bar{\mathbf{r}}(s, \theta) = \bar{r}(s)\, \mathbf{e}_r(\theta) + \bar{z}(s)\, \mathbf{e}_z = \mathbf{r}(s, \theta) + \mathbf{u}(s, \theta) \tag{2.9}$$

where

$$\mathbf{u}(s, \theta) = u(s)\, \mathbf{e}_r(\theta) + w(s)\, \mathbf{e}_z \tag{2.10}$$

is the associated displacement field. Quantities referred to the deformed configuration are indicated by a bar.

Let $\{\bar{\mathbf{e}}_i\} = \{\bar{\mathbf{e}}_1, \bar{\mathbf{e}}_2, \bar{\mathbf{e}}_3\}$ be the triad of unit vectors associated with the deformed reference surface $\bar{\mathcal{M}}$ where $\bar{\mathbf{e}}_1$, $\bar{\mathbf{e}}_2 = \mathbf{e}_\theta$ are tangent to the meridians and parallels and $\bar{\mathbf{e}}_3$ is normal to $\bar{\mathcal{M}}$. Thus

$$\bar{\mathbf{r}}' = \lambda_s \bar{\mathbf{e}}_1, \qquad \bar{\mathbf{r}}^{\cdot} = r\lambda_\theta \mathbf{e}_\theta, \qquad \bar{\mathbf{e}}_3 = \bar{\mathbf{e}}_1 \times \mathbf{e}_\theta \tag{2.11}$$

where

$$\lambda_s(s) = \sqrt{\bar{\mathbf{r}}' \cdot \bar{\mathbf{r}}'}, \qquad \lambda_\theta(s) = \bar{r}/r \tag{2.12}$$

denote the stretches along meridians and parallels. The derivatives of $\bar{\mathbf{e}}_i$ can be expressed in a form analogous to (2.5) by

$$\bar{\mathbf{e}}_i' = \lambda_s \bar{\mathbf{K}}_s \times \bar{\mathbf{e}}_i, \qquad \bar{\mathbf{e}}_i^{\cdot} = r\lambda_\theta \bar{\mathbf{K}}_\theta \times \bar{\mathbf{e}}_i \tag{2.13}$$

with the curvature vectors of the deformed reference surface $\bar{\mathcal{M}}$ defined by

$$\begin{aligned} &\bar{\mathbf{K}}_s = -\bar{K}_s \mathbf{e}_\theta, \qquad \bar{\mathbf{K}}_\theta = \bar{K}_\theta \bar{\mathbf{e}}_1 - \bar{K}_n \bar{\mathbf{e}}_3, \\ &\bar{K}_s = -\lambda_s^{-1} \bar{\varphi}', \quad \bar{K}_\theta = -\lambda_\theta^{-1} \frac{\sin \bar{\varphi}}{r}, \quad \bar{K}_n = -\lambda_\theta^{-1} \frac{\cos \bar{\varphi}}{r}. \end{aligned} \tag{2.14}$$

We now assume, following Makowski and Stumpf [21], that during a torsionless axisymmetric deformation of the shell material fibres initially normal to the undeformed reference surface remain straight, but they may undergo an arbitrary rotation expressed by a rotation vector

$$\boldsymbol{\psi} = \psi \mathbf{e}_\theta, \tag{2.15}$$

and an arbitrary non-uniform stretching expressed by a function $\zeta(s, \xi)$ with $\zeta(s, 0) = 0$. In order to express this assumption in an analytical form we define a triad $\{\mathbf{A}_i\}$ of unit vectors attached to each point of $\bar{\mathcal{M}}$ and such that $\mathbf{A}_3$ is the vector along material fibres which were normal to the undeformed reference surface $\mathcal{M}$, i.e.

$$\mathbf{A}_1 = \mathbf{Q}\mathbf{e}_1 = \cos \psi \mathbf{e}_1 - \sin \psi \mathbf{e}_3, \qquad \mathbf{A}_2 = \mathbf{e}_\theta, \qquad \mathbf{A}_3 = \mathbf{Q}\mathbf{e}_3 = \sin \psi \mathbf{e}_1 + \cos \psi \mathbf{e}_3 \tag{2.16}$$

where

$$\mathbf{Q}(s, \theta) = \mathbf{A}_1 \otimes \mathbf{e}_1 + \mathbf{e}_\theta \otimes \mathbf{e}_\theta + \mathbf{A}_3 \otimes \mathbf{e}_3, \tag{2.17}$$

$$\mathbf{Q}\mathbf{e}_\theta = \mathbf{e}_\theta, \qquad \cos \psi = (\operatorname{tr} \mathbf{Q} - 1)/2 \tag{2.18}$$

is the proper orthogonal tensor corresponding to the finite rotation vector (2.15). Now the position vector of a particle whose initial place was $\mathbf{X}$ takes the form

$$\mathbf{x}(s, \theta, \xi) = \bar{\mathbf{r}}(s, \theta) + \zeta(s, \xi)\, \mathbf{A}_3(s, \theta). \tag{2.19}$$

In order to ensure that the deformation of the shell consistent with (2.19) is non-singular and orientation preserving we require that

$$|\gamma(s)| < \pi/2, \qquad \zeta_{,\xi}(s, \xi) > 0 \tag{2.20}$$

where $\gamma(s)$ is the shear angle defined by $\cos \gamma = \bar{\mathbf{e}}_3 \cdot \mathbf{A}_3$.

The derivatives of $\mathbf{A}_i$ can be expressed in the form

$$\mathbf{A}_i' = \tilde{\mathbf{K}}_s \times \mathbf{A}_i, \qquad \mathbf{A}_i^{\cdot} = r\tilde{\mathbf{K}}_\theta \times \mathbf{A}_i \tag{2.21}$$

where the vectors $\tilde{\mathbf{K}}_s$ and $\tilde{\mathbf{K}}_\theta$ are defined by

$$\tilde{\mathbf{K}}_s = -\tilde{K}_s \mathbf{e}_\theta, \qquad \tilde{\mathbf{K}}_\theta = \tilde{K}_\theta \mathbf{A}_1 - \tilde{K}_n \mathbf{A}_3,$$
$$\tilde{K}_s = -(\varphi' + \psi'), \quad \tilde{K}_\theta = -\frac{\sin(\varphi + \psi)}{r}, \quad \tilde{K}_n = -\frac{\cos(\varphi + \psi)}{r}. \tag{2.22}$$

Then differentiation of the position vector (2.19) yields the natural base vectors at $\mathbf{x}$:

$$\bar{\mathbf{g}}_1 = \mathbf{x}' = (\lambda_s \cos\gamma - \tilde{K}_s \zeta)\, \mathbf{A}_1 + (\lambda_s \sin\gamma + \zeta')\, \mathbf{A}_3,$$
$$\bar{\mathbf{g}}_2 = \mathbf{x}^{\cdot} = r(\lambda_\theta - \tilde{K}_\theta \zeta)\, \mathbf{e}_\theta, \tag{2.23}$$
$$\bar{\mathbf{g}}_3 = \mathbf{x}_{,\xi} = \zeta_{,\xi} \mathbf{A}_3.$$

The reciprocal base vectors $\bar{\mathbf{g}}^i$ are next obtained by solving the system of equations $\bar{\mathbf{g}}^i \cdot \bar{\mathbf{g}}_j = \delta^i_j$ yielding

$$\bar{\mathbf{g}}^1 = (\lambda_s \cos\gamma - \tilde{K}_s \zeta)^{-1}\, \mathbf{A}_1,$$
$$\bar{\mathbf{g}}^2 = r^{-1}(\lambda_\theta - \tilde{K}_\theta \zeta)^{-1}\, \mathbf{e}_\theta, \tag{2.24}$$
$$\bar{\mathbf{g}}^3 = -(\zeta_{,\xi})^{-1}\, [(\lambda_s \cos\gamma - \tilde{K}_s \zeta)^{-1} (\lambda_s \sin\gamma + \zeta')\, \mathbf{A}_1 - \mathbf{A}_3].$$

From (2.23) and (2.24) the components of the metric tensors $\bar{g}_{ij}$ and $\bar{g}^{ij}$ and other relevant quantities follow. In particular we have

$$\sqrt{\bar{g}} = \sqrt{\det \bar{g}_{ij}} = r\lambda_\xi^{-1}(1 - 2\tilde{H}\zeta + \tilde{K}\zeta^2)\, \zeta_{,\xi},$$
$$\lambda_\xi = \frac{1}{\lambda_s \lambda_\theta \cos\gamma}, \quad \tilde{H} = \frac{1}{2}\left(\frac{\tilde{K}_s}{\lambda_s \cos\gamma} + \frac{\tilde{K}_\theta}{\lambda_\theta}\right), \quad \tilde{K} = \frac{\tilde{K}_s \tilde{K}_\theta}{\lambda_s \lambda_\theta \cos\gamma}. \tag{2.25}$$

In (2.25) $\tilde{H}$ and $\tilde{K}$ are defined in such a way that for vanishing shear, i.e. $\gamma = 0$, they coincide with the mean and Gaussian curvature, resp., of the deformed reference surface $\bar{\mathcal{M}}$.

In order to determine the function $\zeta(s, \xi)$ we restrict our considerations to the case of shells made of an incompressible material, i.e. we shall assume that the deformation takes place without change in volume (isochoric deformation). Then $I(s, \xi) = \det \mathbf{F} = \sqrt{\bar{g}/g} = 1$ where $\mathbf{F}$ is the deformation gradient. In view of (2.25) and (2.8) the incompressibility condition $I(s, \xi) = 1$ yields the first order differential equation for the function ζ

$$(1 - 2\tilde{H}\zeta + \tilde{K}\zeta^2)\frac{\partial \zeta}{\partial \xi} = \lambda_\xi(1 - 2H\xi + K\xi^2). \tag{2.26}$$

With the initial condition $\zeta = 0$ for $\xi = 0$ an integration of (2.26) leads to the cubic algebraic equation

$$\tilde{K}\zeta^3 - 3\tilde{H}\zeta^2 + 3\zeta = \lambda_\xi(3\xi - 3H\xi^2 + K\xi^3), \tag{2.27}$$

whose general solution is of the form

$$\zeta(s, \xi) = \zeta(\xi; \lambda_\xi, \tilde{H}, \tilde{K}, H, K). \tag{2.28}$$

In the next chapters we discuss the explicit form of the solution of (2.27).

Introducing now (2.28) into (2.23) and (2.24) we find out that the axisymmetric deformation of the shell of revolution consistent with the single kinematical assumption (2.19) is entirely determined by two independent kinematical variables, the displacement field $\mathbf{u}(s, \theta)$ of the shell reference surface and the finite rotation vector $\boldsymbol{\psi}(s, \theta)$ characterizing the rotation of the initially normal fibres. Thus the resulting kinematical model for the shell is identical to that in the Reissner theory [5].

3 Governing equations

3.1 Strain measures

Suitable strain measures for the Reissner shell model consist of stretching vectors

$$\begin{aligned} \boldsymbol{\epsilon}_s(s, \theta) &= \bar{\mathbf{r}}' - \mathbf{A}_1 = \varepsilon_s \mathbf{A}_1 + \eta \mathbf{A}_2, \\ \boldsymbol{\epsilon}_\theta(s, \theta) &= r^{-1}\bar{\mathbf{r}}^{\cdot} - \mathbf{e}_\theta = \varepsilon_\theta \mathbf{e}_\theta, \end{aligned} \tag{3.1}$$

and bending vectors

$$\begin{aligned} \boldsymbol{\varkappa}_s(s, \theta) &= \tilde{\mathbf{K}}_s - \mathbf{Q}\mathbf{K}_s = \varkappa_s \mathbf{e}_\theta, \\ \boldsymbol{\varkappa}_\theta(s, \theta) &= \tilde{\mathbf{K}}_\theta - \mathbf{Q}\mathbf{K}_\theta = -\varkappa_\theta \mathbf{A}_1 + \varkappa_n \mathbf{A}_3. \end{aligned} \tag{3.2}$$

With

$$\bar{\mathbf{r}}' = \lambda_s \bar{\mathbf{e}}_1 = \lambda_s(\cos\gamma\, \mathbf{A}_1 + \sin\gamma\, \mathbf{A}_3) \tag{3.3}$$

and (2.6), (2.22) the components are obtained to be

$$\begin{aligned} &\varepsilon_s(s) = \lambda_s \cos\gamma - 1, \qquad \varepsilon_\theta(s) = \lambda_\theta - 1, \qquad \eta(s) = \lambda_s \sin\gamma, \\ &\varkappa_s(s) = -(\tilde{K}_s - K_s), \qquad \varkappa_\theta(s) = -(\tilde{K}_\theta - K_\theta), \qquad \varkappa_n(s) = -(\tilde{K}_n - K_n). \end{aligned} \tag{3.4}$$

Using (2.14), (2.22) and the relation $\varphi + \psi = \bar{\varphi} + \gamma$ according to Fig. 1 we can express the bending strains in the alternative form

$$\begin{aligned} \varkappa_s &= -\lambda_s \bar{K}_s + \gamma' + K_s, \\ \varkappa_\theta &= -\lambda_\theta(\bar{K}_\theta \cos\gamma + \bar{K}_n \sin\gamma) + K_s, \\ \varkappa_n &= \lambda_\theta(\bar{K}_\theta \sin\gamma - \bar{K}_n \cos\gamma) + K_n. \end{aligned} \tag{3.5}$$

It is interesting to note that the bending vectors (3.2) are the axial vectors of the skew-symmetric tensors $\mathbf{Q}'\mathbf{Q}^T$ and $r^{-1}\mathbf{Q}^{\cdot}\mathbf{Q}^T$, resp., i.e. for any vector $\mathbf{v}$ the following relations hold

$$\mathbf{Q}'\mathbf{Q}^T\mathbf{v} = \boldsymbol{\varkappa}_s \times \mathbf{v}, \qquad r^{-1}\mathbf{Q}^{\cdot}\mathbf{Q}^T\mathbf{v} = \boldsymbol{\varkappa}_\theta \times \mathbf{v}. \tag{3.6}$$

Finally by making use of (2.9), (3.1)—(3.4), (2.22) and (2.6) we obtain the strain-displacement relations

$$\begin{aligned} \varepsilon_s(s) &= (r' + u')\cos(\varphi + \psi) - (z' + w')\sin(\varphi + \psi) - 1, \\ \varepsilon_\theta(s) &= \frac{u}{r}, \\ \eta(s) &= (r' + u')\sin(\varphi + \psi) + (z' + w')\cos(\varphi + \psi), \\ \varkappa_s(s) &= \psi', \\ \varkappa_\theta(s) &= \frac{\sin(\varphi + \psi) - \sin\varphi}{r}, \\ \varkappa_n(s) &= \frac{\cos(\varphi + \psi) - \cos\varphi}{r}. \end{aligned} \tag{3.7}$$

3.2 Strain energy function

If we now assume, that the shell is hyperelastic incompressible then its mechanical response is governed by a strain energy density $W = W(\mathbf{C}) = C\hat{W}(\mathbf{C})$ where $\mathbf{C}$ is the right Cauchy-Green deformation tensor and $C > 0$ is a positive constant of Young modulus type. The two-dimensional

strain energy function per unit area of the undeformed reference surface is defined as

$$\Phi = C \int_{-h_0^-}^{+h_0^+} \hat{W}(\mathbf{C})\, \mu \, \mathrm{d}\xi. \tag{3.8}$$

Introducing the abbreviations

$$G_1 = \frac{1 + \varepsilon_s - (K_s - \varkappa_s)\,\zeta}{1 - K_s\xi}, \quad G_2 = \frac{1 + \varepsilon_\theta - (K_\theta - \varkappa_\theta)\,\zeta}{1 - K_\theta\xi}, \quad \Gamma = \frac{\eta + \zeta'}{1 - K_s\xi} \tag{3.9}$$

the physical components of the right Cauchy-Green deformation tensor $\mathbf{C} = \mathbf{F}^T\mathbf{F} = \bar{g}_{ij}\mathbf{g}^i \otimes \mathbf{g}^j$ are

$$[C_{\langle ij\rangle}] = \begin{bmatrix} G_1^2 + \Gamma^2 & 0 & G_1^{-1}G_2^{-1}\Gamma \\ 0 & G_2^2 & 0 \\ G_1^{-1}G_2^{-1}\Gamma & 0 & G_1^{-2}G_2^{-2} \end{bmatrix}. \tag{3.10}$$

From (3.10) the principle invariants of $\mathbf{C}$ follow as

$$\begin{aligned} I_1(\mathbf{C}) &= \operatorname{tr}\mathbf{C} = G_1^2 + G_2^2 + G_1^{-2}G_2^{-2} + \Gamma^2, \\ I_2(\mathbf{C}) &= \frac{1}{2}\left[(\operatorname{tr}\mathbf{C})^2 - \operatorname{tr}\mathbf{C}^2\right] = G_1^{-2} + G_2^{-2} + G_1^2G_2^2 + G_2^2\Gamma^2, \end{aligned} \tag{3.11}$$

and, obviously, $I_3 = \det\mathbf{C} = 1$. Moreover, in view of (2.28), (2.25) and (3.4) we have

$$\zeta(s, \xi) = \zeta(\xi;\, \varepsilon_s, \varepsilon_\theta, \varkappa_s, \varkappa_\theta). \tag{3.12}$$

Accordingly, (3.8), (3.10) and (3.12) imply that the two-dimensional strain energy Φ depends not only on the strain measures but also on their derivatives with respect to the meridian coordinate s. A shell theory with such dynamical structure has been examined in [21]. Here, in order to preserve the conventional structure of the shell theory, we shall assume that the deformation is sufficiently smooth so that the expression $(3.9)_3$ for Γ may be simplified to the form

$$\Gamma = \frac{\eta}{1 - K_s\xi}. \tag{3.13}$$

Consequently, the strain energy function defined by (3.8) takes the conventional form

$$\Phi = \Phi(\boldsymbol{\epsilon}_s, \boldsymbol{\epsilon}_\theta, \boldsymbol{\varkappa}_s, \boldsymbol{\varkappa}_\theta) = \Phi(\varepsilon_s, \varepsilon_\theta, \eta, \varkappa_s, \varkappa_\theta). \tag{3.14}$$

3.3 Stress measures and constitutive equations

Stress measures that are work-conjugate to the strains (3.1) and (3.2) consist of the stress resultants $\mathbf{N}_s$, $\mathbf{N}_\theta$, and couples $\mathbf{M}_s$, $\mathbf{M}_\theta$ defined (per unit length along parallels and meridians of $\mathcal{M}$) by

$$\begin{aligned} \mathbf{N}_s(s, \theta) &= \frac{\partial\Phi}{\partial\boldsymbol{\epsilon}_s} = N_s(s)\,\mathbf{A}_1(s, \theta) + Q(s)\,\mathbf{A}_3(s, \theta), \\ \mathbf{N}_\theta(s, \theta) &= \frac{\partial\Phi}{\partial\boldsymbol{\epsilon}_\theta} = N_\theta(s)\,\mathbf{e}_\theta(\theta), \\ \mathbf{M}_s(s, \theta) &= \frac{\partial\Phi}{\partial\boldsymbol{\varkappa}_s} = M_s(s)\,\mathbf{e}_\theta(\theta), \\ \mathbf{M}_\theta(s, \theta) &= \frac{\partial\Phi}{\partial\boldsymbol{\varkappa}_\theta} = -M_\theta(s)\,\mathbf{A}_1(s, \theta), \end{aligned} \tag{3.15}$$

so that

$$\begin{aligned} N_s &= \frac{\partial\Phi}{\partial\varepsilon_s}, \quad N_\theta = \frac{\partial\Phi}{\partial\varepsilon_\theta}, \quad Q = \frac{\partial\Phi}{\partial\eta}, \\ M_s &= \frac{\partial\Phi}{\partial\varkappa_s}, \quad M_\theta = \frac{\partial\Phi}{\partial\varkappa_\theta}. \end{aligned} \tag{3.16}$$

The relations (3.16) are nothing else but the constitutive equations for the theory under consideration.

3.4 *Principle of virtual work, equilibrium equations and boundary conditions*

Equilibrium equations and boundary conditions consistent with the assumptions of this theory can now be obtained by applying the standard variational procedure. By virtue of (2.19), (2.28) and (3.8) the 3-D expression for the virtual work reduces to the form

$$J(\mathfrak{u};\delta\mathfrak{u}) = \int_{s_1}^{s_2} (\delta\Phi - \mathbf{p}\cdot\delta\mathbf{u} - \mathbf{l}\cdot\delta\boldsymbol{\psi})\, r\,\mathrm{d}s - [r(\mathbf{N}_s^*\cdot\delta\mathbf{u} + \mathbf{M}_s^*\cdot\delta\boldsymbol{\psi})]_{s_1}^{s_2} \tag{3.17}$$

where $\delta\Phi$ is the variation of the strain energy function (3.14), $\mathbf{p}$ and $\mathbf{l}$ are external forces and moments per unit area of the undeformed reference surface, and $\mathbf{N}_s^*$ and $\mathbf{M}_s^*$ are resultant boundary forces and moments. With $\mathfrak{u}$ the set of independent kinematical variables $\mathfrak{u} = (\mathbf{u}, \boldsymbol{\psi})$ is denoted. Keeping in mind that

$$\delta\mathbf{A}_i = \delta\boldsymbol{\psi}\times\mathbf{A}_i, \tag{3.18}$$

the variations of the strain measures can be obtained as

$$\begin{aligned}
&\delta\boldsymbol{\epsilon}_s - \delta\boldsymbol{\psi}\times\boldsymbol{\epsilon}_s = \delta\varepsilon_s\mathbf{A}_1 + \delta\eta\mathbf{A}_3 = \delta\mathbf{u}' - \delta\boldsymbol{\psi}\times\bar{\mathbf{r}}',\\
&\delta\boldsymbol{\epsilon}_\theta = \delta\varepsilon_\theta\mathbf{e}_\theta = r^{-1}\mathbf{e}_z\times\delta\mathbf{u},\\
&\delta\boldsymbol{\varkappa}_s = \delta\varkappa_s\mathbf{e}_\theta = \delta\boldsymbol{\psi}',\\
&\delta\boldsymbol{\varkappa}_\theta - \delta\boldsymbol{\psi}\times\boldsymbol{\varkappa}_\theta = -\delta\varkappa_\theta\mathbf{A}_1 + \delta\varkappa_n\mathbf{A}_3 = r^{-1}\mathbf{e}_z\times\delta\boldsymbol{\psi},
\end{aligned} \tag{3.19}$$

leading with (3.15) to the variation of the strain energy function in the form

$$\delta\Phi = \mathbf{N}_s\cdot(\delta\boldsymbol{\epsilon}_s - \delta\boldsymbol{\psi}\times\boldsymbol{\epsilon}_s) + \mathbf{N}_\theta\cdot\delta\boldsymbol{\epsilon}_\theta + \mathbf{M}_s\cdot\delta\boldsymbol{\varkappa}_s + \mathbf{M}_\theta\cdot(\delta\boldsymbol{\varkappa}_\theta - \delta\boldsymbol{\psi}\times\boldsymbol{\varkappa}_\theta). \tag{3.20}$$

Introducing (3.20) into (3.17) one gets by partial integration

$$\begin{aligned}
J(\mathfrak{u};\delta\mathfrak{u}) = -\int_{s_1}^{s_2} \{&[(r\mathbf{N}_s)' + \mathbf{e}_z\times\mathbf{N}_\theta + r\mathbf{p}]\cdot\delta\mathbf{u}\\
&+ [(r\mathbf{M}_s)' + \mathbf{e}_z\times\mathbf{M}_\theta + r\bar{\mathbf{r}}'\times\mathbf{N}_s + r\mathbf{l}]\cdot\delta\boldsymbol{\psi}\}\,\mathrm{d}s\\
&+ [r(\mathbf{N}_s - \mathbf{N}_s^*)\cdot\delta\mathbf{u} + r(\mathbf{M}_s - \mathbf{M}_s^*)\cdot\delta\boldsymbol{\psi}]_{s_1}^{s_2}.
\end{aligned} \tag{3.21}$$

The principle of virtual work states that

$$J(\mathfrak{u};\delta\mathfrak{u}) = 0 \tag{3.22}$$

for arbitrary kinematically admissible variation $\delta\mathfrak{u} = (\delta\mathbf{u}, \delta\boldsymbol{\psi})$ leading to the local equilibrium equations

$$\begin{aligned}
&(r\mathbf{N}_s)' + \mathbf{e}_z\times\mathbf{N}_\theta + r\mathbf{p} = \mathbf{0},\\
&(r\mathbf{M}_s)' + \mathbf{e}_z\times\mathbf{M}_\theta + r\bar{\mathbf{r}}'\times\mathbf{N}_s + r\mathbf{l} = \mathbf{0},
\end{aligned} \tag{3.23}$$

and the boundary conditions

$$\begin{aligned}
&\mathbf{N}_s = \mathbf{N}_s^* \quad\text{or}\quad \mathbf{u} = \mathbf{u}^*,\\
&\mathbf{M}_s = \mathbf{M}_s^* \quad\text{or}\quad \boldsymbol{\psi} = \boldsymbol{\psi}^*
\end{aligned} \tag{3.24}$$

where $\mathbf{u}^*$, $\boldsymbol{\psi}^*$ are prescribed boundary displacements and rotations, respectively. With surface loads represented in the form

$$\mathbf{p} = p_H\mathbf{e}_r + p_V\mathbf{e}_z, \qquad \mathbf{l} = l\mathbf{e}_\theta \tag{3.25}$$

the equilibrium equations (3.23) can be written in the component form

$$\begin{aligned}
&\{r[N_s\cos(\varphi+\psi) + Q\sin(\varphi+\psi)]\}' - N_\theta + rp_H = 0,\\
&\{r[-N_s\sin(\varphi+\psi) + Q\cos(\varphi+\psi)]\}' + rp_V = 0,\\
&(rM_s)' - M_\theta\cos(\varphi+\psi) + r[\eta N_s - (1+\varepsilon_s)Q] + rl = 0.
\end{aligned} \tag{3.26}$$

4 Buckling equations

Of major importance in the shell analysis is the determination of critical equilibrium deformations where buckling of the structure can occur. Because they are characterized by the existence of an adjacent equilibrium state, we can derive the buckling equations as linearized equations about a finitely deformed equilibrium configuration.

Let $\mathfrak{u} = (\mathbf{u}, \boldsymbol{\psi})$ be a critical equilibrium state and let $\hat{\mathfrak{u}} = (\hat{\mathbf{u}}, \hat{\boldsymbol{\psi}})$ be a superimposed deformation such that $\mathfrak{u} + \hat{\mathfrak{u}} = (\mathbf{u} + \hat{\mathbf{u}}, \boldsymbol{\psi} + \hat{\boldsymbol{\psi}})$ denote the final deformation. To deduce the buckling equations we consider the functional $J(\mathfrak{u}; \delta\mathfrak{u})$ according to (3.17) and (3.21), resp., and replace there $\mathfrak{u}$ by $\mathfrak{u} + \hat{\mathfrak{u}}$ and determine the first Gâteaux differential of $J(\mathfrak{u}; \delta\mathfrak{u})$

$$J^{(1)}(\mathfrak{u}; \hat{\mathfrak{u}}, \delta\mathfrak{u}) = \frac{\mathrm{d}}{\mathrm{d}t} J(\mathfrak{u} + t\hat{\mathfrak{u}}; \delta\mathfrak{u})_{t=0}, \qquad t \geqq 0. \tag{4.1}$$

The Gâteaux differential of (3.21) leads to the functional

$$\begin{aligned} J^{(1)}(\mathfrak{u}; \hat{\mathfrak{u}}, \delta\mathfrak{u}) = \int_{s_1}^{s_2} & [\mathbf{N}_s^{(1)}(\mathfrak{u}; \hat{\mathfrak{u}}) \cdot (\delta\mathbf{u}' - \delta\boldsymbol{\psi} \times \bar{\mathbf{r}}') - \mathbf{N}_s(\mathfrak{u}) \cdot (\delta\boldsymbol{\psi} \times \hat{\mathbf{u}}') \\ & + \mathbf{N}_\theta^{(1)}(\mathfrak{u}; \hat{\mathfrak{u}}) \cdot r^{-1}(\mathbf{e}_z \times \delta\mathbf{u}) + \mathbf{M}_s^{(1)}(\mathfrak{u}; \hat{\mathfrak{u}}) \cdot \delta\boldsymbol{\psi}' + \mathbf{M}_\theta^{(1)}(\mathfrak{u}; \hat{\mathfrak{u}}) \cdot r^{-1}(\mathbf{e}_z \times \delta\boldsymbol{\psi}) \\ & - \mathbf{p}^{(1)}(\mathfrak{u}; \hat{\mathfrak{u}}) \cdot \delta\mathbf{u} - \mathbf{l}^{(1)}(\mathfrak{u}; \hat{\mathfrak{u}}) \cdot \delta\boldsymbol{\psi}]\, r\, \mathrm{d}s \\ & - \left[r\left(\mathbf{N}_s^{*(1)}(\mathfrak{u}; \hat{\mathfrak{u}}) \cdot \delta\mathbf{u} + \mathbf{M}_s^{*(1)}(\mathfrak{u}; \hat{\mathfrak{u}}) \cdot \delta\boldsymbol{\psi}\right)\right]_{s_1}^{s_2}. \end{aligned} \tag{4.2}$$

If $J^{(1)}(\mathfrak{u}; \hat{\mathfrak{u}}, \delta\mathfrak{u})$ vanishes for arbitrary geometrically admissible $\delta\mathfrak{u}$, i.e.

$$J^{(1)}(\mathfrak{u}; \hat{\mathfrak{u}}, \delta\mathfrak{u}) = 0 \qquad \forall\, \delta\mathfrak{u}, \tag{4.3}$$

then $\mathfrak{u}$ is a critical equilibrium state and $\hat{\mathfrak{u}}$ the associated buckling deformation. In the nonlinear theory of thin shells of Kirchhoff-Love type undergoing small strain deformations condition (4.3) corresponds to the energy criterion of stability, according to which the second Gâteaux differential of the total potential energy vanishes for critical equilibrium deformations.

Introducing (4.2) into (4.3) and using some transformations of Sect. 3.4 we obtain the buckling equations

$$\begin{aligned} & [r\mathbf{N}_s^{(1)}(\mathfrak{u}; \hat{\mathfrak{u}})]' + \mathbf{e}_z \times \mathbf{N}_\theta^{(1)}(\mathfrak{u}; \hat{\mathfrak{u}}) + r\mathbf{p}^{(1)}(\mathfrak{u}; \hat{\mathfrak{u}}) = 0, \\ & [r\mathbf{M}_s^{(1)}(\mathfrak{u}; \hat{\mathfrak{u}})]' + \mathbf{e}_z \times \mathbf{M}_\theta^{(1)}(\mathfrak{u}; \hat{\mathfrak{u}}) + r\hat{\mathbf{u}}' \times \mathbf{N}_s(\mathfrak{u}) + r\bar{\mathbf{r}}' \times \mathbf{N}_s^{(1)}(\mathfrak{u}; \hat{\mathfrak{u}}) + r\mathbf{l}^{(1)}(\mathfrak{u}; \hat{\mathfrak{u}}) = 0 \end{aligned} \tag{4.4}$$

with associated buckling boundary conditions

$$\begin{aligned} & \mathbf{N}_s^{(1)}(\mathfrak{u}; \hat{\mathfrak{u}}) - \mathbf{N}_s^{*(1)}(\mathfrak{u}; \hat{\mathfrak{u}}) = \mathbf{0} \quad \text{or} \quad \hat{\mathbf{u}} = \mathbf{0}, \\ & \mathbf{M}_s^{(1)}(\mathfrak{u}; \hat{\mathfrak{u}}) - \mathbf{M}_s^{*(1)}(\mathfrak{u}; \hat{\mathfrak{u}}) = \mathbf{0} \quad \text{or} \quad \hat{\boldsymbol{\psi}} = \mathbf{0}. \end{aligned} \tag{4.5}$$

Comparing (4.4), (4.5) with (3.23), (3.24) it follows that buckling equations and associated boundary conditions are the Gâteaux differentials of the equilibrium equations with corresponding boundary conditions.

Taking into account that the stress measures (3.15), (3.16) and the surface load $\mathbf{p}$ are defined through their components with respect to the rotated base we obtain the stress and load differentials

$$\begin{aligned} & \mathbf{N}_s^{(1)}(\mathfrak{u}; \hat{\mathfrak{u}}) = \hat{\mathbf{N}}_s + \hat{\boldsymbol{\psi}} \times \mathbf{N}_s(\mathfrak{u}), \qquad \mathbf{N}_\theta^{(1)}(\mathfrak{u}; \hat{\mathfrak{u}}) = \hat{\mathbf{N}}_\theta, \\ & \mathbf{M}_s^{(1)}(\mathfrak{u}; \hat{\mathfrak{u}}) = \hat{\mathbf{M}}_s, \qquad \mathbf{M}_\theta^{(1)}(\mathfrak{u}; \hat{\mathfrak{u}}) = \hat{\mathbf{M}}_\theta + \hat{\boldsymbol{\psi}} \times \mathbf{M}_\theta(\mathfrak{u}), \end{aligned} \tag{4.6}$$

$$\mathbf{p}^{(1)}(\mathfrak{u}; \hat{\mathfrak{u}}) = \hat{\mathbf{p}} + \hat{\boldsymbol{\psi}} \times \mathbf{p}(\mathfrak{u}), \qquad \mathbf{l}^{(1)}(\mathfrak{u}; \hat{\mathfrak{u}}) = \hat{\mathbf{l}} \tag{4.7}$$

where the increments of (4.6), (4.7) are expressed in the base of the equilibrium state:

$$\begin{aligned} \hat{\mathbf{N}}_s &= \hat{N}_s \mathbf{A}_1 + \hat{Q}\mathbf{A}_3, \qquad \hat{\mathbf{N}}_\theta = \hat{N}_\theta \mathbf{e}_\theta, \\ \hat{\mathbf{M}}_s &= \hat{M}_s \mathbf{e}_\theta, \qquad \hat{\mathbf{M}}_\theta = -\hat{M}_\theta \mathbf{A}_1, \end{aligned} \tag{4.8}$$

$$\hat{\mathbf{p}} = \hat{p}_1 \mathbf{A}_1 + \hat{p}_3 \mathbf{A}_3, \qquad \hat{\mathbf{l}} = \hat{l}\mathbf{e}_\theta. \tag{4.9}$$

The components of the stress increments (4.8) have to satisfy the constitutive relations

$$\begin{bmatrix} \hat{N}_s \\ \hat{N}_\theta \\ \hat{Q} \\ \hat{M}_s \\ \hat{M}_\theta \end{bmatrix} = \begin{bmatrix} \Phi_{\varepsilon_s\varepsilon_s} & \Phi_{\varepsilon_s\varepsilon_\theta} & \Phi_{\varepsilon_s\eta} & \Phi_{\varepsilon_s\varkappa_s} & \Phi_{\varepsilon_s\varkappa_\theta} \\ & \Phi_{\varepsilon_\theta\varepsilon_\theta} & \Phi_{\varepsilon_\theta\eta} & \Phi_{\varepsilon_\theta\varkappa_s} & \Phi_{\varepsilon_\theta\varkappa_\theta} \\ & & \Phi_{\eta\eta} & \Phi_{\eta\varkappa_s} & \Phi_{\eta\varkappa_\theta} \\ \text{sym.} & & & \Phi_{\varkappa_s\varkappa_s} & \Phi_{\varkappa_s\varkappa_\theta} \\ & & & & \Phi_{\varkappa_\theta\varkappa_\theta} \end{bmatrix} \begin{bmatrix} \hat{\varepsilon}_s \\ \hat{\varepsilon}_\theta \\ \hat{\eta} \\ \hat{\varkappa}_s \\ \hat{\varkappa}_\theta \end{bmatrix} \tag{4.10}$$

where the short notations $\Phi_{\varepsilon_s\varepsilon_s} = \partial^2\Phi/\partial\varepsilon_s\,\partial\varepsilon_s$, etc. are used. The strain components in (4.10) are defined with respect to the base of the equilibrium state:

$$\begin{aligned} \hat{\boldsymbol{\epsilon}}_s &= \hat{\varepsilon}_s \mathbf{A}_1 + \hat{\eta}\mathbf{A}_3 = \hat{\mathbf{u}}' - \hat{\boldsymbol{\psi}} \times \bar{\mathbf{r}}', \qquad \hat{\boldsymbol{\epsilon}}_\theta = \hat{\varepsilon}_\theta \mathbf{e}_\theta = r^{-1}\mathbf{e}_z \times \hat{\mathbf{u}}, \\ \hat{\boldsymbol{\varkappa}}_s &= \hat{\varkappa}_s \mathbf{e}_\theta = \hat{\boldsymbol{\psi}}', \qquad \hat{\boldsymbol{\varkappa}}_\theta = -\hat{\varkappa}_\theta \mathbf{A}_1 + \hat{\varkappa}_n \mathbf{A}_3 = r^{-1}\mathbf{e}_z \times \hat{\boldsymbol{\psi}}. \end{aligned} \tag{4.11}$$

Introducing (4.6), (4.7) into (4.4) and (4.5) yields the buckling equations in vector form

$$\begin{aligned} &(r\hat{\mathbf{N}}_s)' + r\hat{\boldsymbol{\psi}}' \times \mathbf{N}_s + \mathbf{e}_z \times \hat{\mathbf{N}}_\theta + r\hat{\mathbf{p}} = \mathbf{0}, \\ &(r\hat{\mathbf{M}}_s)' + \mathbf{e}_z \times \hat{\mathbf{M}}_\theta + r\bar{\mathbf{r}}' \times \hat{\mathbf{N}}_s + r(\hat{\mathbf{u}}' - \hat{\boldsymbol{\psi}} \times \bar{\mathbf{r}}') \times \mathbf{N}_s + (\mathbf{e}_z \times \hat{\boldsymbol{\psi}}) \times \mathbf{M}_\theta + r\hat{\mathbf{l}} = \mathbf{0} \end{aligned} \tag{4.12}$$

with associated buckling boundary conditions

$$\begin{aligned} &\hat{\mathbf{N}}_s - \hat{\mathbf{N}}_s^* = \mathbf{0} \quad \text{or} \quad \hat{\mathbf{u}} = \mathbf{0}, \\ &\hat{\mathbf{M}}_s - \hat{\mathbf{M}}_s^* = \mathbf{0} \quad \text{or} \quad \hat{\boldsymbol{\psi}} = \mathbf{0}. \end{aligned} \tag{4.13}$$

The buckling equations (4.12) with (4.13) are linear in the superimposed deformation $\hat{\mathbf{u}}$, but depend nonlinearly on the pre-buckling state $\mathbf{u}$. By introducing (4.11) into (4.12) it follows that the buckling equations (4.12) do not contain explicitely the superimposed displacements $\hat{\mathbf{u}}$ and rotations $\hat{\boldsymbol{\psi}}$.

5 Determination of the constitutive relations

In the theory under consideration the constitutive relations (3.15) and their incremental form (4.10) entering into the buckling equations are defined as first and second derivatives of the strain energy function (3.8) with respect to its arguments. Assume for simplicity that a material is isotropic so that the strain energy density is a function $\hat{W} = \hat{W}(I_1, I_2)$ of the principal invariants (3.11). Let further $\hat{\xi} = \xi/h_0 \in [-\alpha^-, +\alpha^+]$, $\alpha^\pm = h_0^\pm/h_0$, be the dimensionless normal coordinate and set $\mathrm{e} = (\varepsilon_s, \varepsilon_\theta, \eta, \varkappa_s, \varkappa_\theta)$. Then from (3.11), (3.9), (3.12) and (3.13)

$$I_\beta(s, \hat{\xi}) = I_\beta(\hat{\xi}; \mathrm{e}) \qquad (\beta = 1, 2), \tag{5.1}$$

and partial differentiation of (3.8) yields

$$\Phi_p(\mathrm{e}) = Ch_0 \int_{\alpha^-}^{\alpha^+} (\hat{W}_{10} I_{1p} + \hat{W}_{01} I_{2p})\, \mu\, \mathrm{d}\hat{\xi}, \tag{5.2}$$

$$\begin{aligned} \Phi_{pq}(\mathrm{e}) = Ch_0 \int_{\alpha^-}^{\alpha^+} [&\hat{W}_{10} I_{1pq} + \hat{W}_{01} I_{2pq} + \hat{W}_{20} I_{1p} I_{1q} \\ &+ \hat{W}_{11}(I_{1p} I_{2q} + I_{1q} I_{2p}) + \hat{W}_{02} I_{2p} I_{2q}]\, \mu\, \mathrm{d}\hat{\xi} \end{aligned} \tag{5.3}$$

where subscripts p, q indicate partial derivatives with respect to any of the strains ε_s, ε_θ, η, $\varkappa_s$ or $\varkappa_\theta$, and

$$\hat{W}_{kl}(I_1, I_2) = \frac{\partial^{k+l}\hat{W}}{\partial I_1^k\, \partial I_2^l} \quad (k, l = 0, 1, 2). \tag{5.4}$$

It is to be noted here, that the list of arguments of $I_\beta(\hat{\xi}, \mathrm{e})$ and consequently of the strain energy function Φ and its derivatives (5.2), (5.3) should also contain the meridian coordinate s. The dependency on s is caused by variable curvatures $K_s(s)$, $K_\theta(s)$ and a variable thickness $h_0(s)$. This argument is suppressed in (5.1)—(5.4) for simplicity.

Let us consider now the particular case of circular plates and spherical shells, for which $K_s = K_\theta$. Then it is not difficult to show that the solution (3.12) of the cubic algebraic equation (2.27) enjoys the symmetry property

$$\zeta(\hat{\xi}; \varepsilon_s, \varepsilon_\theta, \varkappa_s, \varkappa_\theta) = \zeta(\hat{\xi}; \varepsilon_\theta, \varepsilon_s, \varkappa_\theta, \varkappa_s). \tag{5.5}$$

Consequently, from (5.5), (3.11) and the definitions of G_1, G_2 and Γ we can prove that the strain energy function $\Phi(\mathrm{e})$ meets Antman's isotropy condition [22, 23]

$$\Phi(\varepsilon_s, \varepsilon_\theta, o, \varkappa_s, \varkappa_\theta) = \Phi(\varepsilon_\theta, \varepsilon_s, o, \varkappa_\theta, \varkappa_s). \tag{5.6}$$

In turn, (5.6) implies

$$\begin{aligned} \Phi_{\varepsilon_s}(\varepsilon_s, \varepsilon_\theta, o, \varkappa_s, \varkappa_\theta) &= \Phi_{\varepsilon_\theta}(\varepsilon_\theta, \varepsilon_s, o, \varkappa_\theta, \varkappa_s), \\ \Phi_{\varkappa_s}(\varepsilon_s, \varepsilon_\theta, o, \varkappa_s, \varkappa_\theta) &= \Phi_{\varkappa_\theta}(\varepsilon_\theta, \varepsilon_s, o, \varkappa_\theta, \varkappa_s), \end{aligned} \tag{5.7}$$

and analogous symmetry properties can be obtained for the second partial derivatives of $\Phi(\mathrm{e})$. However, it is important to note that $K_s = K_\theta$ is the only case when this symmetry holds.

With the use of (5.2), (5.3) and (3.11) we are able to establish a number of other constitutive properties which are crucial in the analysis of any boundary value problem. In paricular, from (3.11), $(3.9)_{1,2}$ and (3.13) we have

$$I_{1\eta}(\hat{\xi}; \mathrm{e}) = 2\mu_1^{-2}\eta, \qquad I_{2\eta}(\hat{\xi}; \mathrm{e}) = 2\mu_1^{-2}G_2^2\eta, \tag{5.8}$$

$$I_{1\eta q}(\hat{\xi}; \mathrm{e}) = 0, \qquad I_{2\eta q}(\hat{\xi}; \mathrm{e}) = 4\mu_1^{-2}G_2G_{2q}\eta \tag{5.9}$$

for $q = \varepsilon_s$, ε_θ, $\varkappa_s$ or $\varkappa_\theta$ where $\mu_1 = 1 - h_0K_s\hat{\xi}$. Substituting (5.8) and (5.9) into (5.2) and (5.3) we find out that $\Phi_\eta(\mathrm{e})$ is odd in η and

$$\Phi_\eta(\mathrm{e}) = 0, \quad \Phi_{\eta q}(\mathrm{e}) = 0 \quad \text{for} \quad q = \varepsilon_s, \varepsilon_\theta, \varkappa_s, \varkappa_\theta, \tag{5.10}$$

whenever $\eta = 0$. Equation $(5.10)_1$ states that the shear force Q vanishes, whenever shear strain η vanishes. However, it can easily be verified in the same way that in general $\varkappa_s = \varkappa_\theta = 0$ does not necessarily imply that the couples M_s, M_θ vanish, which is in contrast to ad hoc assumptions often made in the literature (cf. [22, 23]).

In order to determine the explicit form of the constitutive relations for the general case we may represent the solution of the cubic equation (2.27) in the form of a power series with respect to the normal coordinate $\hat{\xi}$

$$\zeta(s, \hat{\xi}) = h_0\lambda_\xi\hat{\xi}\left(1 + h_0\beta_1\hat{\xi} + \frac{1}{2!}\, h_0^2\beta_2\hat{\xi}^2 + \cdots\right) \tag{5.11}$$

where

$$\begin{aligned} \beta_1 &= \lambda_\xi\tilde{H} - H, \\ \beta_2 &= 4\lambda_\xi\tilde{H}\beta_1 - \frac{2}{3}\,(\lambda_\xi^2\tilde{K} - K), \\ \beta_3 &= 6\lambda_\xi\tilde{H}(\beta_2 + \beta_1^2) - 6\lambda_\xi^2\tilde{K}\beta_1, \\ \beta_4 &= 48\lambda_\xi\tilde{H}\left(\beta_1\beta_2 + \frac{1}{6}\,\beta_3\right) - 24\lambda_\xi^2\tilde{K}\left(\beta_1^2 + \frac{1}{2}\,\beta_2\right), \quad \text{etc.} \end{aligned} \tag{5.12}$$

Introducing next (5.11) into $(3.9)_{1,2}$, (3.13) and subsequently into (3.11) and (3.8) or (5.2), (5.3) different levels of approximation for the strain energy function $\Phi(\mathfrak{e})$ and its derivatives are obtained. This procedure commonly used in the literature requires that a number of implicit assumptions hold to assure that the underlying power expansion is convergent. But this need not to be the case as it is demonstrated by an example given in [14]. In the following considerations we will show that for a wide class of buckling problems we can proceed in a different and more promising way.

Let us consider the buckling of circular plates or cylindrical and spherical shells from unsheared and uniformly stretched equilibrium states specified by $\mathfrak{e}_0 = (\lambda_s - 1, \lambda_\theta - 1, 0, 0, 0)$. The solution $\zeta(\hat{\xi}; \mathfrak{e}_0)$ of (2.27) and of the associated constitutive relations specified by $\Phi_p(\mathfrak{e}_0)$ can then be obtained in a closed form without any assumption concerning the magnitude of strains or the initial shell thickness. Consequently, the derived solutions are exact in the sense of three-dimensional finite elasticity. Also differentiation of (2.27) with respect to the strain measures and subsequent setting $\mathfrak{e} = \mathfrak{e}_0$ enables us to obtain the closed form of the partial derivatives $\zeta_p(\hat{\xi}; \mathfrak{e}_0)$ and $\zeta_{pq}(\hat{\xi}; \mathfrak{e}_0)$ of ζ evaluated at the trivial state $\mathfrak{e}_0$. Then from (5.3) we can determine the closed form of $\Phi_{pq}(\mathfrak{e}_0)$ and thus the incremental constitutive relations entering into the buckling equations. In this way we are able to examine this class of buckling problems for arbitrarily thick shells.

6 Flexural buckling of circular plates

6.1 *Formulation of the problem, trivial solution*

Consider a circular plate of initial radius R_0 and of initial thickness $h_0 =$ const. subjected to a radial load of intensity p per reference length. We shall take the reference surface to be the mid-plane, $\hat{\xi} \in [-1/2, +1/2]$, and we shall assume that the lateral boundary of the plate is constrained to remain parallel to $\mathbf{e}_z$. Let further $t = R_0^{-1}s$, $t \in [0, 1]$ denote the dimensionless radial coordinate. Then the boundary conditions are

$$\mathbf{N}_s(1, \theta) = -p\mathbf{e}_r(\theta), \qquad \psi(1) = 0, \tag{6.1}$$

$$\bar{r}(0) = \eta(0) = \psi(0) = 0 \tag{6.2}$$

as a consequence of the symmetry of the deformation. Here the positive p is taken to correspond to the compression of the plate. With vanishing surface loads and in view of boundary condition $(6.1)_1$ the equilibrium equations (3.26) can be reduced to the form

$$\begin{aligned} &tN_s + \left[pR_0 + \int_t^1 N_\theta(\tau)\,\mathrm{d}\tau\right]\cos\psi = 0, \\ &tQ - \left[pR_0 + \int_t^1 N_\theta(\tau)\,\mathrm{d}\tau\right]\sin\psi = 0, \\ &(tM_s)_{,t} - \cos\psi\, M_\theta + R_0 t\,[\eta N_s - (1 + \varepsilon_s)\,Q] = 0 \end{aligned} \tag{6.3}$$

where $(\cdot)_{,t}$ indicates differentiation with respect to t. We also assume that the plate is made of a hyperelastic, isotropic, incompressible material so that the constitutive relations are given by (5.2). As before we set $\mathfrak{e} = (\varepsilon_s, \varepsilon_\theta, \eta, \varkappa_s, \varkappa_\theta)$.

The boundary value problem (6.3), $(6.1)_2$, (6.2) admit a trivial solution $\mathfrak{e}_0 = (\lambda - 1, \lambda - 1, 0, 0, 0)$ in which the plate remain flat, unsheared, and uniformly stretched, where $\lambda = R/R_0$ with R being the radius of the stretched plate. From (2.27) we have $\zeta = h_0\lambda^{-2}\hat{\xi}$ and from (3.11), $(3.9)_{1,2}$ and (3.13) we easily find that

$$I_1^0 \equiv I_1(\hat{\xi}, \mathfrak{e}_0) = 2\lambda^2 + \lambda^{-4}, \qquad I_2^0 \equiv I_2(\hat{\xi}, \mathfrak{e}_0) = 2\lambda^{-2} + \lambda^4. \tag{6.4}$$

Thus

$$\hat{W}_{kl}^0 \equiv \hat{W}_{kl}(I_1^0, I_2^0) \qquad (k, l = 0, 1, 2) \tag{6.5}$$

are independent of the normal coordinate $\hat{\xi}$. Moreover, from (5.2), (3.11) and (2.27) we obtain

$$\Phi_{\varepsilon_s}(\mathrm{e}_0) = \Phi_{\varepsilon_\theta}(\mathrm{e}_0) = 2Ch_0(\hat{W}^0_{10} + \lambda^2\hat{W}^0_{01})\,(\lambda - \lambda^{-5}), \tag{6.6}$$

$$\Phi_\eta(\mathrm{e}_0) = \Phi_{\varkappa_s}(\mathrm{e}_0) = \Phi_{\varkappa_\theta}(\mathrm{e}_0) = 0. \tag{6.7}$$

As a result the equilibrium equations (6.3) reduce to the single algebraic relation between the load p and the stretch λ:

$$N^0 + p = 0, \qquad N^0 = \Phi_{\varepsilon_s}(\mathrm{e}_0) = \Phi_{\varepsilon_\theta}(\mathrm{e}_0). \tag{6.8}$$

We point out that the trivial solution of the problem specified by (6.8) and (6.6) is exact in the sense of the three-dimensional nonlinear elasticity.

6.2 *Buckling problem*

In order to determine the buckling of the circular plate from the trivial solution e_0 we can follow the procedure outlined in Sect. 4. We consider the superimposed deformation $\hat{\mathrm{u}} = (\hat{\mathbf{u}}, \hat{\boldsymbol{\psi}})$ with the associated set $\hat{\mathrm{e}} = (\hat{\varepsilon}_s, \hat{\varepsilon}_\theta, \hat{\eta}, \hat{\varkappa}_s, \hat{\varkappa}_\theta)$ of incremental strain measures and an analogously denoted set of the incremental stress measures. The linearized equilibrium equations and the boundary conditions about the trivial solution can now be obtained from (6.1)—(6.3) or, simply, by specialization of (4.12), (4.13) to the problem under consideration. Thus, keeping in mind (6.8) and (6.7) the buckling equations are obtained in the form

$$\begin{aligned} &t\hat{N}_s - \int_t^1 \hat{N}_\theta(\tau)\,\mathrm{d}\tau = 0,\\ &\hat{Q} - N^0\hat{\psi} = 0,\\ &(t\hat{M}_s)_{,t} - \hat{M}_\theta - R_0 t(\lambda\hat{Q} - N^0\hat{\eta}) = 0. \end{aligned} \tag{6.9}$$

The associated boundary conditions relevant to the subsequent analysis are

$$\hat{\psi}(0) = \hat{\psi}(1) = 0. \tag{6.10}$$

The incremental constitutive relations can next be obtained in the way outlined in Sect. 5. A straightforward but rather lenghy calculation yields

$$\begin{aligned} &\hat{N}_s = E\hat{\varepsilon}_s + F\hat{\varepsilon}_\theta, \qquad \hat{N}_\theta = F\hat{\varepsilon}_\theta + E\hat{\varepsilon}_s,\\ &\hat{Q} = G\hat{\eta},\\ &\hat{M}_s = D\hat{\varkappa}_s + B\hat{\varkappa}_\theta, \qquad \hat{M}_\theta = B\hat{\varkappa}_s + D\hat{\varkappa}_\theta \end{aligned} \tag{6.11}$$

where

$$E \equiv \Phi_{\varepsilon_s\varepsilon_s}(\mathrm{e}_0) = \Phi_{\varepsilon_\theta\varepsilon_\theta}(\mathrm{e}_0), \qquad F \equiv \Phi_{\varepsilon_s\varepsilon_\theta}(\mathrm{e}_0), \tag{6.12}$$

$$G \equiv \Phi_{\eta\eta}(\mathrm{e}_0) = 2Ch_0(\hat{W}_{10} + \lambda^2\hat{W}_{01}), \tag{6.13}$$

$$D \equiv \Phi_{\varkappa_s\varkappa_s}(\mathrm{e}_0) = \Phi_{\varkappa_\theta\varkappa_\theta}(\mathrm{e}_0) = \frac{2}{3}Ch_0^3\lambda^{-10}(\hat{W}_{10} + \lambda^2\hat{W}_{01})\left[1 + \frac{1}{2}\lambda^6(\lambda - \lambda^{-5})^2\,\Omega\right], \tag{6.14}$$

$$B \equiv \Phi_{\varkappa_s\varkappa_\theta}(\mathrm{e}_0) \tag{6.15}$$

are all independent of the radial coordinate t, and $\Omega(\lambda) = \Omega(I_1^0, I_2^0)$ is defined by

$$\Omega = \frac{\hat{W}^0_{20} + 2\lambda^2\hat{W}^0_{11} + \lambda^4\hat{W}^0_{02}}{\hat{W}^0_{10} + \lambda^2\hat{W}^0_{01}}. \tag{6.16}$$

Finally, from (4.11) we have

$$\hat{\varkappa}_s(t) = R_0^{-1}\hat{\psi}_{,t}, \qquad \hat{\varkappa}_\theta(t) = (R_0 t)^{-1}\,\hat{\psi}. \tag{6.17}$$

Introducing now (6.11) into (6.9) and subsequently making use of (6.17) we can show that the flexural buckling of the plate is governed by the equation

$$(t\hat{\psi}_{,t})_{,t} - [t^{-1} - k(\lambda, \chi_0)\, t]\, \hat{\psi} = 0 \tag{6.18}$$

where

$$k(\lambda, \chi_0) = \frac{R_0^2 N^0}{D}\left(\frac{N^0}{G} - \lambda\right) \tag{6.19}$$

$$= \chi_0^2 \frac{3\lambda^4(1-\lambda^6)}{4\lambda^4 + 2(1-\lambda^6)\,\Omega} \tag{6.20}$$

with $\chi_0 = 2R_0/h_0$ being the reference slenderness parameter of the plate.

In this way we could reduce the problem of flexural buckling of the plate to the nonlinear eigenvalue problem (6.18), (6.10) for the radial stretch λ. We note that once the critical stretch λ_c is determined the corresponding critical value p_c of the load may easily be obtained from (6.8) and (6.6).

Furthermore we observe that the principal stretches in the trivial state of the plate are $\lambda_1 = \lambda_2 = \lambda$, $\lambda_3 = \lambda^{-2}$. Under these circumstances Lee and Sternberg [24] proved that (in our notations)

$$\hat{W}^0_{10} + \lambda^{-4}\hat{W}^0_{01} > 0, \qquad \lambda^4 + 2(1-\lambda^3)^2\,\Omega > 0 \tag{6.21}$$

are necessary and sufficient conditions for ellipticity of the three-dimensional displacement equilibrium equations. Assuming (6.21) as reasonable constitutive restrictions we can show that $k(\lambda, \chi_0) > 0$ for $\lambda < 1$. Then λ_c is the eigenvalue of (6.18), (6.10) if and only if (cf. Antman [23])

$$k(\lambda_c, \chi_0) = j_n^2 \tag{6.22}$$

where j_n is the $(n+1)$st zero of the Bessel function J_1 of order 1. It follows from (6.22) and (6.20) that the buckling behavior of the plate depends on specific properties of a material only through Ω defined by (6.16). This result fully coincides with the three-dimensional solution to the problem obtained by Guo [25].

The lowest eigenvalue of (6.22) corresponds to $j_1 = 3{,}8317$. The results obtained for Mooney-Rivlin material with

$$W = C[I_1 - 3 + \beta(I_2 - 3)] \tag{6.23}$$

are presented in Fig. 2 and Fig. 3. A comparison with the three-dimensional solution of the problem derived by Guo [25] shows a good agreement even for relatively thick plates. However, for

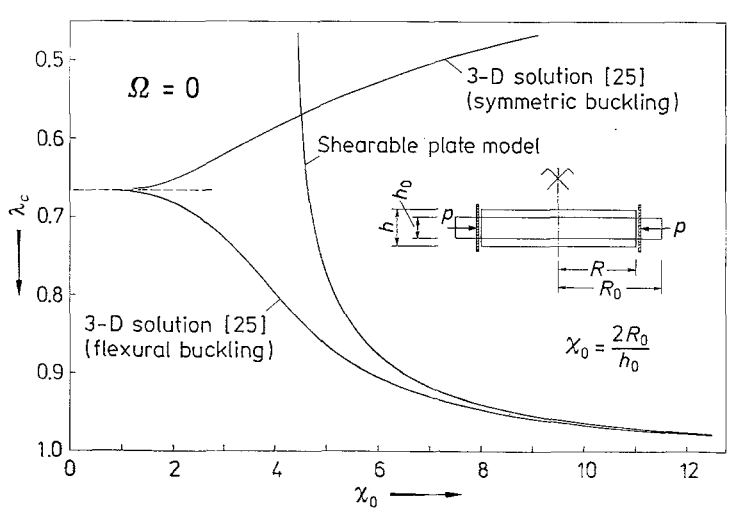

Fig. 2. Critical stretch vs thickness parameter

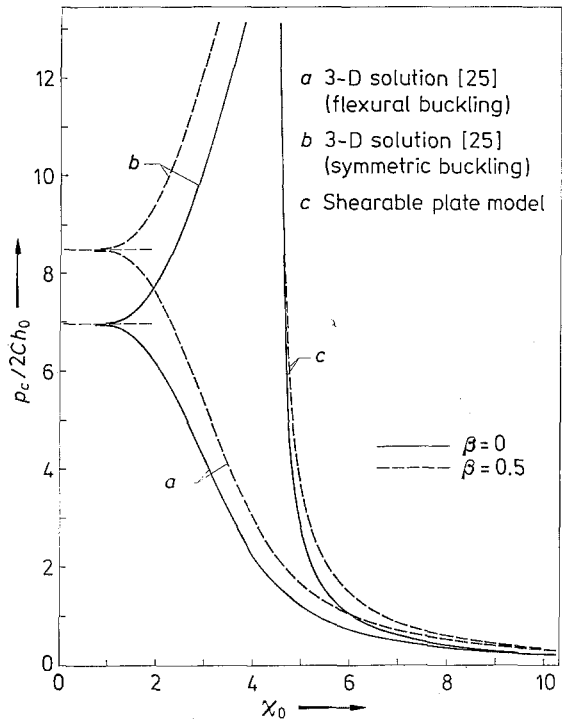

Fig. 3. Critical load vs thickness parameter

very thick plates when χ_0 approaches zero, the results obtained by the shell theory and by the three-dimensional solution diverge. Furthermore, our analysis of the flexural buckling provides no informations about the symmetrical (bulging) type of instability known from the three-dimensional analysis of the problem.

6.3 Unshearable plate model

The general theory of axisymmetric deformation of shells of revolution developed in Ch. 2—5 as well as the solution of the buckling problem of circular plates can easily be reduced to the particular case in which the shear deformation is constrained to vanish. The corresponding set of equations can be obtained from those derived in the preceding sections by setting $\gamma = 0$ and thus $\eta = 0$. In this case the strain energy function defined by (3.8) takes the form $\Phi = \Phi(\varepsilon_s, \varepsilon_\theta, \varkappa_s, \varkappa_\theta)$. Consequently, the shear force Q is no longer determined by the constitutive relation but it plays the role of a Lagrange multiplier in the equations in which it appears. Also, in the theory without shear the displacement field $\mathbf{u}(s, \theta)$ of the reference surface and the finite rotation vector $\boldsymbol{\psi}(s, \theta)$ are no longer independent variables, since $\boldsymbol{\psi}$ may be expressed in terms of $\mathbf{u}$ and its derivative $\mathbf{u}'$ (cf. [3]).

The problem of buckling of circular plates within the unshearable theory may again be reduce to the nonlinear eigenvalue problem (6.18), (6.10) with

$$k(\lambda, \chi_0) = -\lambda \frac{R_0^2 N^0}{D} \tag{6.23}$$

$$= \chi_0^2 \frac{3\lambda^{10}(1 - \lambda^6)}{4\lambda^4 + 2(1 - \lambda^6)^2\, \Omega}, \tag{6.24}$$

and with N^0 and D defined by (6.8) and (6.14), respectively. We note that (6.23) follows from (6.19) by setting $G \to +\infty$ in consistency with the constrain $\gamma = 0$.

A comparison of the solutions for the critical stretch obtained within the theory with and without shear is shown in Fig. 4 and Fig. 5. demonstrating the relevance of the shear deformation for the buckling behavior of circular plates. We note the initial and current slenderness parameters are related by $\chi = \lambda^3 \chi_0$. Remarkable here is the change in the character of the behavior.

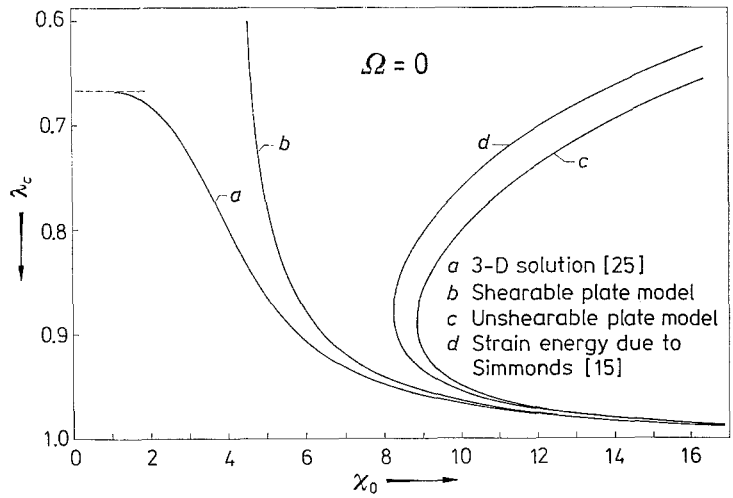

Fig. 4. Critical stretch vs. initial thickness parameter χ_0

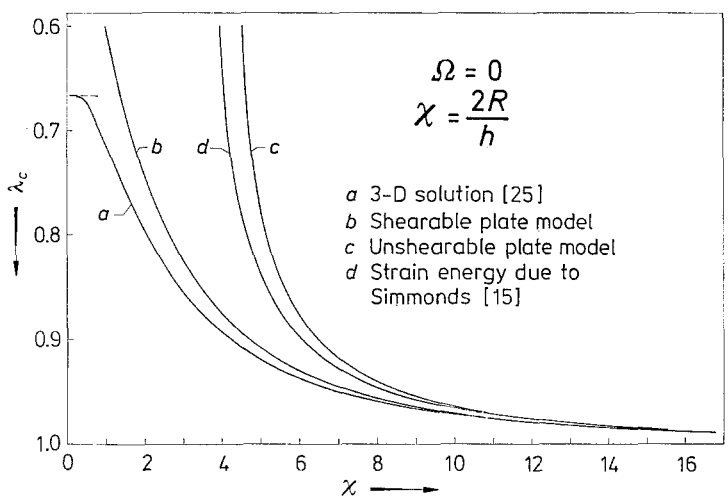

Fig. 5. Critical stretch vs. current thickness parameter χ

6.4 Alternative form of the constitutive relations

We point out that the obtained solutions for the buckling of circular plates are exact within the underlying assumptions. In particular, in our development of the constitutive relations no assumption is made about the magnitude of strains, rotations or the initial shell thickness. It is to be noted, furthermore, that the reduction of the buckling problem to the nonlinear eigenvalue problem leading to (6.22) with $k(\lambda, \chi_0)$ defined either by (6.19) for the shearable model or by (6.23) for the unshearable model is valid for any form of the constitutive relations that are of the form (6.11). This fact enables us to examine the buckling behavior of circular plates using also models with alternatively derived constitutive relations.

For the theory without shear and for the particular case of neo-Hookean material Simmonds derived a strain energy function of the form ([15], eq. (45))

$$\Phi = Ch_0\{\lambda_s^2 + \lambda_\theta^2 + \lambda_s^{-2}\lambda_\theta^{-2} - 3 + h_0^2\lambda_s^{-6}\lambda_\theta^{-6}[(3 + \lambda_s^4\lambda_\theta^2)\,\lambda_\theta^2\varkappa_s^2 + (3 + \lambda_s^2\lambda_\theta^4)\,\lambda_s^2\varkappa_\theta^2 + 4\lambda_s\lambda_\theta\varkappa_s\varkappa_\theta]/12\}\,. \tag{6.25}$$

Determining N^0 and D from (6.25) and substituting the result into (6.23) one gets

$$k(\lambda, \chi_0) = \chi_0^2\,\frac{3\lambda^6(1 - \lambda^6)}{3 + \lambda^6}\,. \tag{6.26}$$

The solutions according to (6.26) are shown in Fig. 4 and Fig. 5. Examinating the reason for the difference in the solutions predected by our constitutive relations for unshearable model and those used by Simmonds we could show that the reason lies in the fact that the reference surface in [15] is not a material surface but a weighted one.

References

1. Reissner, E.: On axisymmetrical deformations of thin shells of revolution. In: Proc. Symp. Appl. Math. 3, pp. 27–52. New York: McGraw-Hill 1950
2. Alumäe, N. A.: On theory of finite deflections of axisymmetric shells of revolutions (in Russian). Prikl. Mat. Mekh. 16 (1952) 419–428
3. Makowski, J.; Nolte, L.-P.: Simple equations in terms of displacements for finite axisymmetric deflections of shells of revolution. Int. J. Non-Linear Mech. 1 (1987) 1–13
4. Simmonds, J. G.: A new displacement form for the nonlinear equations of motion of shells of revolution. J. Appl. Mech. 52 (1985) 507–509
5. Reissner, E.: On finite symmetrical deflections of thin shells of revolution. J. Appl. Mech. 36 (1969) 267–270
6. Reissner, E.: On finite symmetrical strain in thin shells of revolution. J. Appl. Mech. 39 (1972) 1137
7. Antman, S. S.: Existence and nonuniqueness of axisymmetric equilibrium states of nonlinearly elastic shells. Arch. Ration. Mech. Anal. 40 (1971) 329–371
8. Cohen, H.; Pastrone, F.: Axisymmetric equilibrium states of non-linear elastic cylindrical shells. Int. J. Non-Linear Mech. 21 (1986) 37–50
9. Chernykh, K. F.: Nonlinear theory of isotropically elastic thin shells (in Russian). Izv. AN SSSR, MTT 15 (1980) 148–159
10. Chernykh, K. F.: The theory of thin shells of elastomers (in Russian), Adv. Mech. 6 (1983) 111–147
11. Taber, L. A.: On approximate large strain relations for a shell of revolution. Int. J. Non-Linear Mech. 20 (1985) 27–39
12. Brodland, G. W.; Cohen, H.: Deflection and snapping of spherical caps. Int. J. Solids Struct. 23 (1987) 1341–1356
13. Brodland, G. W.; Cohen, H.: Large-strain axisymmetric deformation of cylindrical shells. J. Appl. Mech. 54 (1987) 287–291
14. Stumpf, H.; Makowski, J.: On large strain deformations of shells. Acta Mech. 65 (1986) 153–168
15. Simmonds, J. G.: The strain-energy density of rubber-like shells of revolution undergoing torsionless, axisymmetric deformation (axishells). J. Appl. Mech. 53 (1986) 593–596
16. Simmonds, J. G.: The strain-energy density of compressible, rubber-like axishells. J. Appl. Mech. 54 (1987) 453–454
17. Cook, W. A.: A finite element model for nonlinear shells of revolution. Int. J. Numer. Methods Eng. 18 (1982) 135–149
18. Cook, W. A.: Limitations and possible extensions to a nonlinear finite element shell-of-revolution model based on Reissner's shell theory. Int. J. Numer. Methods Eng. 18 (1982) 1855–1871
19. Taber, L. A.: Large elastic deformation of shear deformable shells of revolution: theory and analysis. J. Appl. Mech. 54 (1987) 578–584
20. Libai, A.; Simmonds, J. G.: The nonlinear theory of elastic shells, part 1: spatial dimension. San Diego: Academic Press 1988
21. Makowski, J.; Stumpf, H.: Finite strains and rotations in shells. In: Pietraszkiewicz, W. (ed.) Finite rotations in structural mechanics, Proc. EUROMECH Colloquium 197, pp. 175–194. Berlin: Springer 1986
22. Antman, S. S.: Qualitative properties of large buckled states of spherical shells. Arch. Ration. Mech. Anal. 87 (1986) 357–384
23. Antman, S. S.: Buckled states of nonlinearly elastic plates. Arch. Ration. Mech. Anal. 67 (1977) 111–149
24. Zee, L.; Sternberg, E.: Ordinary and strong ellipticity in the equilibrium theory of incompressible hyperelastic solids. Arch. Ration. Mech. Anal. 83 (1983) 53–90
25. Guo, Z.-H.: Vibration and stability of a cylinder subject to finite deformation. Arch. Mech. 14 (1962) 757–768

Received July 29, 1988

Dr.-Ing. J. Makowski
Prof. Dr.-Ing. H. Stumpf
Ruhr-Universität Bochum
Lehrstuhl für Mechanik II
Universitätsstraße 150/IA 3/125
D-4630 Bochum
Federal Republic of Germany