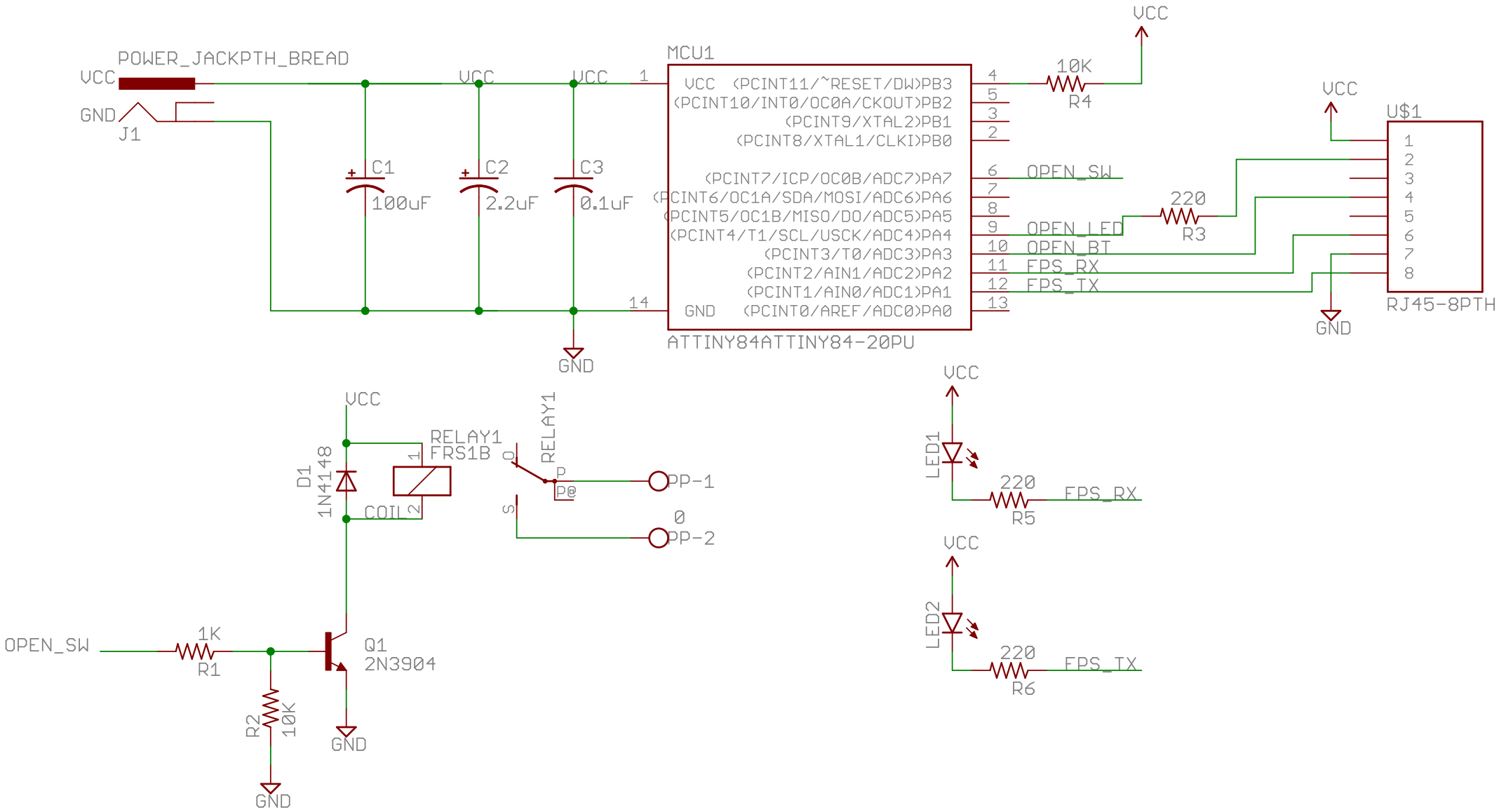
POWER_JACKPTH_BREAD
VCC
GND
J1
C1
100uF
C2
2.2uF
C3
0.1uF
MCU1
VCC (PCINT11/~RESET/DW)PB3
(PCINT10/INT0/OC0A/CKOUT)PB2
(PCINT9/XTAL2)PB1
(PCINT8/XTAL1/CLKI)PB0
(PCINT7/ICP/OC0B/ADC7)PA7
(PCINT6/OC1A/SDA/MOSI/ADC6)PA6
(PCINT5/OC1B/MISO/DO/ADC5)PA5
(PCINT4/T1/SCL/USCK/ADC4)PA4
(PCINT3/T0/ADC3)PA3
(PCINT2/AIN1/ADC2)PA2
(PCINT1/AIN0/ADC1)PA1
GND (PCINT0/AREF/ADC0)PA0
ATTINY84ATTINY84-20PU
10K
R4
OPEN_SW
OPEN_LED
OPEN_BT
FPS_RX
FPS_TX
220
R3
U$1
RJ45-8PTH
D1
1N4148
RELAY1
FRS1B
COIL
PP-1
PP-2
OPEN_SW
1K
R1
R2
10K
Q1
2N3904
LED1
220
R5
LED2
R6