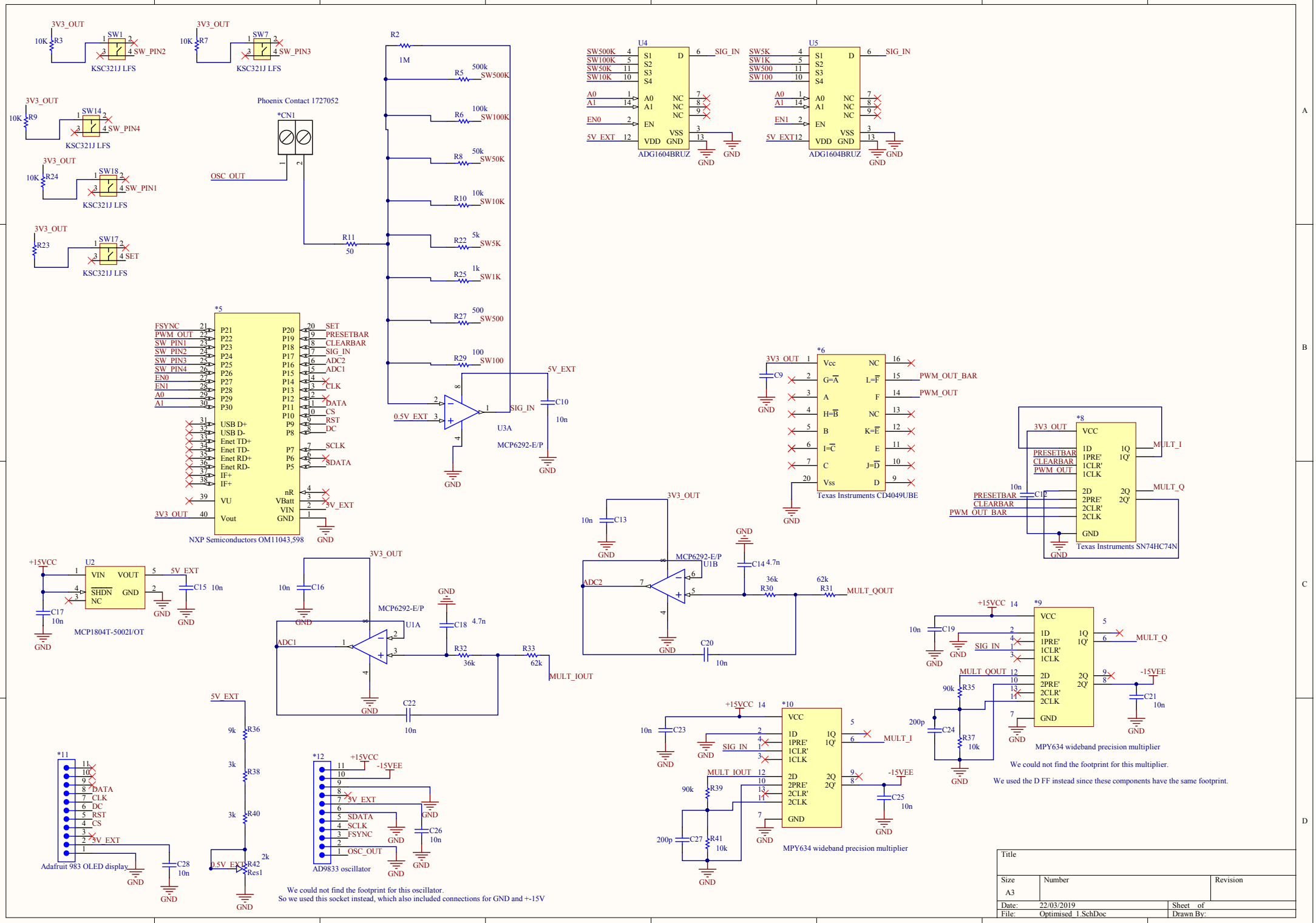
3V3_OUT
10K R3
SW1
SW_PIN2
KSC321J LFS
10K R7
SW7
SW_PIN3
10K R9
SW14
SW_PIN4
10K R24
SW18
SW_PIN1
R23
SW17
SET
Phoenix Contact 1727052
*CN1
OSC_OUT
R2
1M
R5 500k SW500K
R6 100k SW100K
R8 50k SW50K
R10 10k SW10K
R22 5k SW5K
R25 1k SW1K
R27 500 SW500
R29 100 SW100
R11 50
U4
ADG1604BRUZ
SIG_IN
U5
5V_EXT
0.5V_EXT
U3A
MCP6292-E/P
C10 10n
GND
*5
FSYNC
PWM_OUT
SW_PIN1
SW_PIN2
SW_PIN3
SW_PIN4
EN0
EN1
A0
A1
SET
PRESETBAR
CLEARBAR
SIG_IN
ADC2
ADC1
CLK
DATA
CS
RST
DC
SCLK
SDATA
USB D+
USB D-
Enet TD+
Enet TD-
Enet RD+
Enet RD-
IF+
VU
Vout
VBatt
VIN
NXP Semiconductors OM11043,598
*6
Texas Instruments CD4049UBE
PWM_OUT_BAR
PWM_OUT
C9
*8
Texas Instruments SN74HC74N
MULT_I
MULT_Q
C12 10n
+15VCC
U2
VIN
VOUT
SHDN
NC
5V_EXT
C15 10n
C17 10n
MCP1804T-5002I/OT
C16 10n
U1A
C18 4.7n
R32 36k
R33 62k
MULT_IOUT
C22 10n
C13 10n
U1B
C14 4.7n
R30 36k
R31 62k
MULT_QOUT
C20 10n
*9
C19 10n
MULT_QOUT
-15VEE
R35 90k
C24 200p
R37 10k
C21 10n
MPY634 wideband precision multiplier
We could not find the footprint for this multiplier.
We used the D FF instead since these components have the same footprint.
*10
C23 10n
MULT_I
R39 90k
C27 200p
R41 10k
C25 10n
R36 9k
R38 3k
R40 3k
R42 2k
Res1
*11
Adafruit 983 OLED display
C28 10n
*12
AD9833 oscillator
C26 10n
We could not find the footprint for this oscillator.
So we used this socket instead, which also included connections for GND and +-15V
Title
Size A3
Number
Revision
Date: 22/03/2019
Sheet of
File: Optimised_1.SchDoc
Drawn By: