FUEL CELL DATA ACQUISITION SYSTEM

-Analog Measurement & Digital Data Interface (KiCad)

Objective: To develop a complete measurement architecture for fuel cell characterization, which includes precise analog signal conditioning, 16-bit ADC integration, SPI-based data acquisition, and UART transmission for reliable external data logging and analysis by using ESP32-S3 microcontroller.

System Architecture: The system is designed as a dual-channel acquisition platform for measuring current and voltage of fuel cell.
The architecture consists of:

- Analog current sensing using shunt resistors and amplifier
- Voltage measurement using voltage divider and voltage buffer
- 16-bit ADC with external 4.096 V reference
- Used SPI communication protocol between ESP32-S3 and 16-bit ADC
- UART interface for external data communication

The architecture ensures accurate signal conditioning, optimal ADC utilization, and reliable digital data transfer.

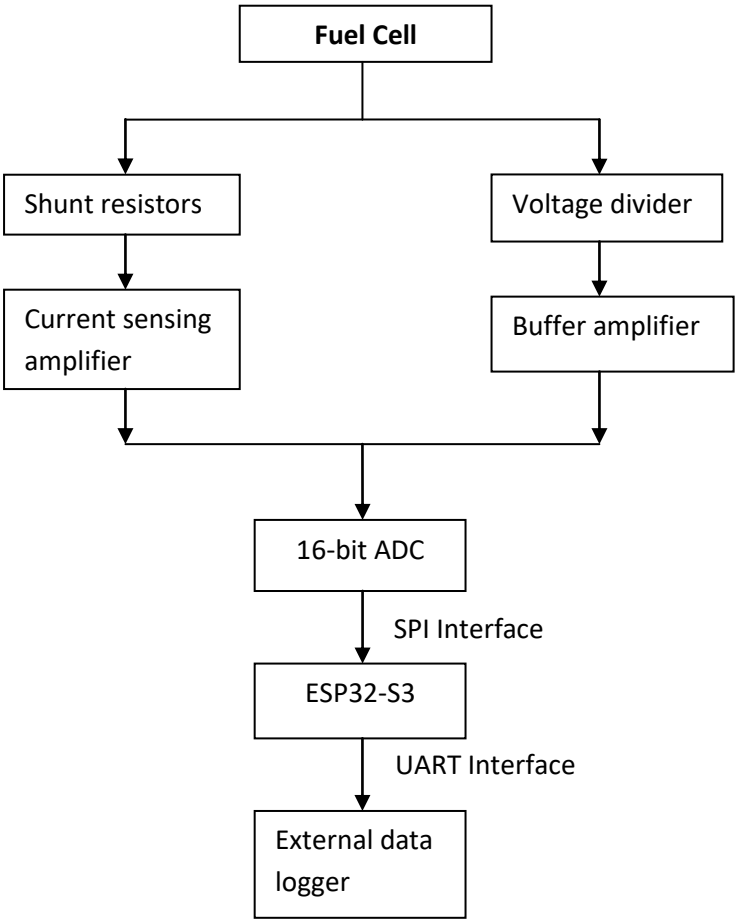

Fig.1: Block diagram of the signal flow

Current Measurement Circuit: The current measurement stage uses a precision low-value shunt network (2 × 16 mΩ in parallel, 8 mΩ effective) to distribute thermal load and improve reliability.
At maximum load (23 A):

- Shunt voltage = 184 mV
- Amplified output (Gain ×20) = 3.68 V

Input RC filtering ensures differential noise suppression, while a high-speed buffer (LT6202) provides stable ADC drive capability. A final RC stage at the ADC input acts as anti-alias protection.

Voltage Measurement Circuit: The fuel cell voltage is scaled using a precision resistor divider (59 k Ω / 2 k Ω / 3.9 k Ω / 100 Ω) providing a division ratio of approximately 0.0615.
For a maximum input of 60 V, the ADC input voltage becomes: V≈3.69V

Voltage Reference and ADC Scaling: A precision 4.096 V voltage reference is used to define the full-scale range of the 16-bit ADC.
The reference value was selected based on system-level scaling of both measurement channels:

- **Current channel (23 A max):**
  Shunt voltage = 184 mV
  Amplified output (Gain ×20) = 3.68 V
- **Voltage channel (60 V max):**
  Divider ratio ≈ 0.0615
  ADC input ≈ 3.69 V

Both channels produce a maximum ADC input of approximately **3.68–3.69 V**, which corresponds to about **90% utilization** of a 4.096 V full-scale range.
For a 16-bit ADC: LSB=4.096V/65536=62.5 micro Volts**.**

ADC Architecture: The system employs two independent 16-bit SAR ADCs for simultaneous current and voltage acquisition.
Each ADC operates with a precision 4.096 V reference, providing:

- 62.5 micro Volts per LSB resolution
- 0.39 mA current resolution
- 1 mV fuel cell voltage resolution
- Includes dedicated decoupling and reference filtering

SPI Communication Interface: The ADCs communicate with the ESP32-S3 using a synchronous SPI protocol in master–slave configuration where the ESP32-S3 operates as the SPI master and generates the serial clock (SCK), while each ADC functions as an SPI slave.

Data Transfer Sequence

- The ESP32 asserts **CNV** to initiate conversion.
- The ADC performs SAR conversion while **BUSY** remains high.
- After BUSY goes low, the MCU pulls SS low to start reading the conversion data via SPI.
- A 16-bit MSB-first data word is shifted out via MISO.
- After 16 clock cycles, the transaction ends.

Total transfer per acquisition cycle: 32 bits, this represents two independent 16-bit conversions, not a single 32-bit ADC.
The SPI interface provides deterministic timing, low latency, and robust digital communication.

Data Communication – UART Interface: Processed measurement data is transmitted via **UART** for external monitoring and logging.

- ESP32 formats current and voltage data after SPI acquisition.
- Data is transmitted asynchronously over serial interface.
- Enables real-time visualization and data recording on external systems.

PCB Design & Fabrication: The system was implemented as a **2-layer FR-4 PCB** in KiCad.

- Top layer used for signal and power routing; bottom layer maintained as a continuous ground plane.
- Power traces routed at **0.5 mm width** to minimize voltage drop.
- Signal traces routed at **0.25 mm width** for compact and controlled layout.
- Clear separation maintained between high-current, analog, and digital routing regions.
- Decoupling capacitors placed close to ADC and reference pins for stable operation.

Manufacturing files like Gerber files, Drill files and Bill of Materials (BOM) are generated and documented technically.

Enclosure Design (Fusion 360): As follow up to this PCB design I designed the Enclosure for my Fuel cell DAQ model in the fusion 360 by maintaining safe distance and considering all technical aspects as:

- Overall dimensions: 94 mm (L) × 94 mm (W) × 22 mm (H)
- Enclosure wall thickness: 2 mm
- Side clearance: 5 mm
- PCB mounting standoff height: 3 mm
- Connectors openings are aligned with PCB layout

All project files are available at: https://github.com/girish-hk/Fuel-Cell-Data-Acquisition-DAQ-ESP32 and also posted at: https://www.linkedin.com/in/girish-hk/

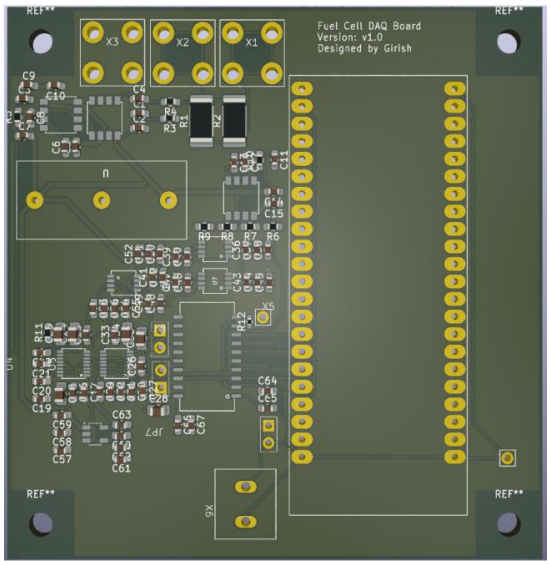

Fig.2: 3D Model of PCB Design

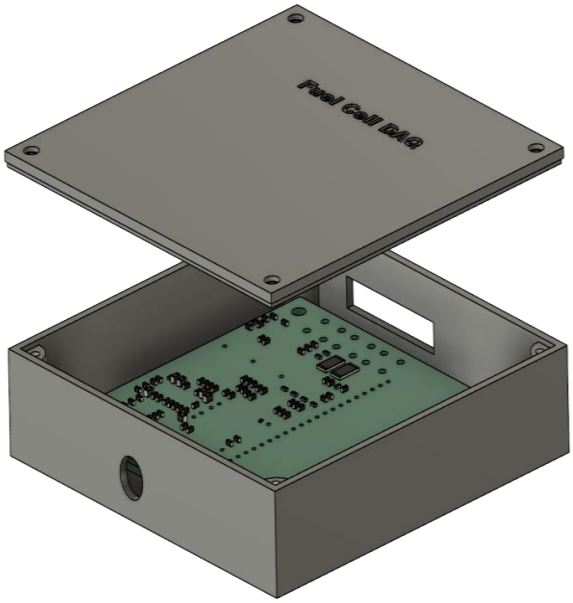

Fig.3: Enclosure for PCB